5-2350-262-24 P

TM 5-2350-262-24P*

TECHNICAL MANUAL

ORGANIZATIONAL, DIRECT SUPPORT, AND GENERAL SUPPORT MAINTENANCE REPAIR PARTS AND SPECIAL TOOLS LIST [INCLUDING DEPOT MAINTENANCE REPAIR PARTS]

FOR

ARMORED COMBAT EARTHMOVER [ACE], M9 [NSN 2350-00-808-7100]

* This publication supersedes TM5-2350-262-20P and TM5-2350-262-34P dated 31 August, 1989

Approved for Public Release: Distribution is Unlimited

HEADQUARTERS, DEPARTMENT OF THE ARMY APRIL 1991

D101. 11:

READEX FICHE best copy available

TECHNICAL MANUAL

(TM 5-2350-262-24P)

HEADQUARTERS
DEPARTMENT OF THE ARMY
Washington D.C., 11 April 1991

ORGANIZATIONAL, DIRECT SUPPORT, AND GENERAL SUPPORT MAINTENANCE REPAIR PARTS AND SPECIAL TOOLS LIST FOR ARMORED COMBAT EARTHMOVER [ACE], M9 [NSN 2350-00-808-7100]

You can improve this manual. If you find any mistakes, or if you know of a way to improve the procedures, please let us know. Mail your letter, DA Form 2028 (Recommended Changes to Publications and Blank Forms), or DA Form 2028-2, located in the back of this manual directly to: Commander, U.S. Army Tank-Automotive Command, ATTN: AMSTA-MB, Warren MI 48397-5000. A reply will be furnished to you.

TABLE OF CONTENTS

			Page	Illus Figure
Section I	INTRODUCTION		1	
Section II	REPAIR PARTS LIST			
Group AA	Accelerator Installation			
	AA	Accelerator Linkage	1-1	1
Group AB	Air System Installation			
	AB	Air Brake Lines and Fittings	2-1	2
	AB	Air Reservoir and Mounting Parts	3-1	3
	AB	Air Compressor Governor and Mounting Parts	4-1	4
	AB	Service Brake Valve and Related Parts	5-1	5
	AB	Trailer Brake Valve and Connectors	6-1	6
Group AD	Armor Installation			
	AD	Armor and Mounting Hardware	7-1	7
Group AF	Brake Control Installation			
	AF	Parking Brake Lever and Linkage	8-1	8
Group AG	Windshield and Canopy Installation			
	AG	Windshield Assembly and Attaching Parts	9-1	9
	AG	Driver's Canopy Installation	10-1	10

* This manual supersedes TM 5-2350-262-34P and TM 5-2350-262-20P dated 31 August 1989 and all related changes

TABLE OF CONTENTS (Continued)

			Page	Illus Figure
Group AJ		Electrical Installation		
	AJ	Wiring Harness and Electrical Lead Installation	11-1	11
	AJ	Battery Wiring Harness, 12355285, and Mounting Hardware	12-1	12
	AJ	STE/ICE Resistor Box and Mounting Parts	13-1	13
	AJ	Resistor Box Wiring Harness – 12355487	14-1	14
	AJ	Master Relay, Slave Receptacle, STE/ICE Shunt and Mounting Hardware	15-1	15
	AJ	Batteries, Box, and Related Parts	16-1	16
	AJ	Battery Leads and Terminals	17-1	17
	AJ	Rear Wiring Harness, 12369102, and Mounting Hardware	18-1	18
	AJ	Headlight Beam Select Switch and Resistor Assembly	19-1	19
	AJ	Trailer Receptacle, Stoplight Switch, and Sending Units	20-1	20
	AJ	Control Wiring Harness, 12357211, and Mounting Hardware	21-1	21
	AJ	High/Low Ventilation Wiring Harnesses – 12357205 and 12357204	22-1	22
	AJ	Driver's Instrument Panel Installation	23-1	23
	AJ	Driver's Instrument Panel Assembly	24-1	24
	AJ	Driver's Instrument Panel Lamps and Indicators	25-1	25
	AJ	Driver's Instrument Panel Data Plates	26-1	26
	AJ	Gage Panel Installation	27-1	27
	AJ	Gage Panel Assembly	28-1	28
	AJ	Gage Panel Data Plates	29-1	29
	AJ	Driver's Compartment Miscellaneous Electrical Components	30-1	30
	AJ	Control Harness Sending Units	31-1	31
	AJ	Control Harness Mounting Brackets	32-1	32
	AJ	Engine Wiring Harness and Lead Installation	33-1	33
	AJ	Engine Wiring Harness, 12355485, and Mounting Hardware	34-1	34
	AJ	Engine Wiring Harness Mounting Bracket and Starter Relay	35-1	35
	AJ	Engine Wiring Harness Sending Units and Connector	36-1	36
	AJ	Smoke Grenade Launcher Wiring Harness Installation	37-1	37
	AJ	Discharger Wiring Harness, 12325765, and Mounting Hardware	38-1	38
	AJ	Arming/Firing Unit Wiring Harness, 12325747, and Mounting Hardware	39-1	39
	AJ	Hull Wiring Harness, 13214E2267, and Mounting Hardware	40-1	40
	AJ	Apron Wiring Harness – 13214E2064	41-1	41
	AJ	Headlight Wiring Harness – 13211E9059	42-1	42
	AJ	Headlight Base Assembly	43-1	43
	AJ	Headlight, Stoplight – Taillight, Domelight, and Floodlights Installation	44-1	44
	AJ	Headlight Assembly – MS53022-1	45-1	45
	AJ	Stoplight – Taillight Assembly – MS52125-2	46-1	46
	AJ	Domelight Assembly – MS51073-1	47-1	47
Group AL		Fire Extinguisher Installation		
	AL	Fixed Fire Extinguisher Lines and Fittings	48-1	48
	AL	Fire Extinguisher Cylinder Assembly	49-1	49
Group AM		Fuel System Installation		
	AM	Fuel System Lines and Fittings	50-1	50
	AM	Fuel Tank and Related Parts	51-1	51
	AM	Fuel Tank Assembly	52-1	52
	AM	Fuel Filter and Mounting Parts	53-1	53
Group AN		Heater and Ventilation Installation		
	AN	Heater and Ventilation Installation	54-1	54
	AN	Heater Assembly	55-1	55
	AN	Driver's Ventilation Fan Installation	56-1	56

TABLE OF CONTENTS (Continued)

			Page	Illus Figure
Group AP		Hull Assembly		
	AP	Apron and Dozer Assembly Installation	57-1	57
	AP	Ejector Assembly	58-1	58
	AP	Bowl Cutting Edges	59-1	59
	AP	Hydraulic Apron Cylinder Assembly and Attaching Hardware	60-1	60
	AP	Hydraulic Ejector Cylinder Assembly and Attaching Hardware	61-1	61
	AP	Driver's Hatch and Latch Installation	62-1	62
	AP	Driver's Hatch Assembly	63-1	63
	AP	Rear Door Assembly and Related Parts	64-1	64
	AP	Miscellaneous Armor Plates and Attaching Parts	65-1	65
	AP	Brackets and Supports	66-1	66
	AP	Floors	67-1	67
	AP	Track Retainers and Wear Plates	68-1	68
	AP	Shackles	69-1	69
	AP	Pintle Hook Assembly and Related Parts	70-1	70
	AP	Access Covers and Thread Inserts	71-1	71
	AP	Rear Bump Stop, Hull Drain Valve, and Mounting Hardware	72-1	72
	AP	Bilge Pump Assembly and Related Parts	73-1	73
	AP	Bilge Pump Hydraulic Motor Assembly	74-1	74
	AP	Data Plates	75-1	75
Group AQ		Hydraulic Control Installation		
	AQ	Hydraulic Control Levers and Linkage	76-1	76
Group AR		Hydraulic Installation		
	AR	Hydraulic Hoses and Fittings	77-1	77
	AR	Hydraulic Tubes and Fittings	78-1	78
	AR	Hydraulic Manifolds and Mounting Parts	79-1	79
	AR	Main Accumulator Assembly and Mounting Parts	80-1	80
	AR	Accumulator Charge and Gage Assembly	81-1	81
	AR	Hydraulic Filters	82-1	82
	AR	Hydraulic Return Line Filter	83-1	83
	AR	Hydraulic Tank Assembly and Installation	84-1	84
	AR	Compensated Pump Assembly and Installation	85-1	85
	AR	Main Hydraulic Pump Assembly and Mounting Parts	86-1	86
	AR	Hydraulic Control Valve Bank Installation	87-1	87
	AR	Valve Bank Lines and Fittings	88-1	88
	AR	Directional Control Valve Bank Assembly	89-1	89
	AR	Sprung-Unsprung Valve Assembly	90-1	90
Group AU		Powertrain Installation		
	AU	Power Package Mountings and Braces	91-1	91
	AU	Starter and Mounting Parts	92-1	92
	AU	Generator, Bracket, and Related Parts	93-1	93
	AU	Fuel Pump, Shutdown Valve, Damper, and Mounting Parts	94-1	94
	AU	Engine External Oil Lines	95-1	95
	AU	Oil Level Indicator	96-1	96
	AU	Oil Pan	97-1	97
	AU	Engine – Coolant Hoses and Clamps	98-1	98
	AU	Transmission Oil Cooler with Engine Coolant Thermostats	99-1	99
	AU	Coolant Pump and Belts	100-1	100
	AU	Cylinder Head Covers	101-1	101
	AU	Engine Data Plates	102-1	102
	AU	Air Cleaner, Hose, and Related Parts	103-1	103
	AU	Muffler and Related Parts	104-1	104
	AU	Engine Starting Aid	105-1	105

TABLE OF CONTENTS (Continued)

			Page	Illus Figure
	AU	Engine Oil Filter	106-1	106
	AU	Power Package – Coolant Hoses and Clamps	107-1	107
	AU	Power Package – External Oil Lines	108-1	108
	AU	Fan and Related Parts	109-1	109
	AU	Fan Assembly	110-1	110
	AU	Fan Tensioner Assembly	111-1	111
	AU	Radiator and Attaching Parts	112-1	112
	AU	Radiator Assembly	113-1	113
	AU	Transfer Case Oil Lines and Fittings	114-1	114
	AU	Transfer Case Installation	115-1	115
	AU	Transfer Case Assembly and Thread Inserts	116-1	116
	AU	Scavenger Pump and Mounting Parts	117-1	117
	AU	Scavenger Pump Oil Filter and Mounting Parts	118-1	118
	AU	Hydraulic Shift Control Lines and Fittings	119-1	119
	AU	Hydraulic Shift Control Valve and Neutral Start Switch	120-1	120
	AU	Transmission (Powertrain) Oil Hoses, Lines, and Fittings	121-1	121
	AU	Transmission (Power Package) Oil Hoses, Lines, and Fittings	122-1	122
	AU	Transmission Oil Filter and Mounting Parts	123-1	123
	AU	Transmission Assembly and Mounting Parts	124-1	124
	AU	Transmission Charging Pump and Related Parts	125-1	125
	AU	Transmission Case and Oil Lines Assembly	126-1	126
	AU	Transmission Shafts, Gears, and Supports	127-1	127
	AU	Transmission Output Flange, Clutch Cover, and Oil Sump	128-1	128
	AU	Transmission Control Valve Installation	129-1	129
	AU	Transmission Control Valve Assembly	130-1	130
	AU	Transmission 1st and 2nd Forward/Reverse Clutch Assemblies and Gears	131-1	131
	AU	Transmission 3rd and 4th High/Low Clutch Assembly	132-1	132
	AU	Transmission 5th and 6th Clutch Assembly	133-1	133
	AU	Transmission Torque Converter Shafts and Housing	134-1	134
	AU	Transmission Torque Converter	135-1	135
	AU	Steering Wheel and Linkage	136-1	136
	AU	Steering Selector Lever, Linkage, and Data Plates	137-1	137
	AU	Shifting Lever and Linkage	138-1	138
	AU	Steer Unit Breather, Lines, and Fittings	139-1	139
	AU	Steer Unit and Mounting Parts	140-1	140
	AU	Steer Unit Filler Neck and Strainer	141-1	141
	AU	Steer Unit Valves and Related Parts	142-1	142
	AU	Steer Unit Control Valve Assembly	143-1	143
	AU	Steer Unit Final Drive Couplings and End Covers	144-1	144
	AU	Steer Unit Brake Levers and Related Parts	145-1	145
	AU	Steer Unit Oil Pump and Related Parts	146-1	146
	AU	Steer Unit Shafts and Related Parts	147-1	147
	AU	Steer Unit Left and Right Clutches	148-1	148
	AU	Propeller Shaft	149-1	149
	AU	Final Drive Oil Breather Lines and Fittings	150-1	150
	AU	Final Drives Installation	151-1	151
	AU	Final Drive Assembly	152-1	152
	AU	Drive Sprockets	153-1	153
	AU	Roadwheel	154-1	154
	AU	Track Shoe Assembly	155-1	155
Group AV	Purifier Installation, Air			
	AV	Air Purifier Installation	156-1	156
	AV	Air Purifier Heater Assembly	157-1	157
	AV	M2A2 Air Purifier/Precleaner Assembly	158-1	158

TABLE OF CONTENTS (Continued)

			Page	Illus Figure
Group AW		Radio Equipment Installation		
	AW	Radio Equipment Installation	159-1	159
	AW	Radio Box Wiring Harness	160-1	160
Group AX		Seat Installation		
	AX	Seat Installation	161-1	161
Group AZ		Splash Shield Installation		
	AZ	Splash Shield Installation	162-1	162
Group A2		Stowage Installation		
	A2	Stowage Installation	163-1	163
	A2	Hull Stowage Box and Mounting Parts	164-1	164
	A2	Hull Stowage Box Assembly	165-1	165
Group A3		Suspension Installation		
	A3	Hydraulic Actuators Installation	166-1	166
	A3	Corner Suspension Unit 1L	167-1	167
	A3	Corner Actuator – Shipping Plugs	168-1	168
	A3	Corner Actuator Assembly – 13204E2560	169-1	169
	A3	Corner Actuator – Manifold	170-1	170
	A3	Intermediate Suspension Units 2R and 3L Shipping Plugs	171-1	171
	A3	Intermediate Actuator Assembly – 13204E2561	172-1	172
	A3	Accumulator Assembly and Mounting Parts	173-1	173
	A3	Roadwheel Arm Installation	174-1	174
	A3	Roadwheel Arm Assembly	175-1	175
	A3	Track Adjusting Cylinder Mounting Hardware	176-1	176
	A3	Track Adjusting Cylinder Assembly	177-1	177
	A3	Front Bump Stop and Related Parts	178-1	178
	A3	Bump Stop Cylinder Assembly	179-1	179
Group A5		Winch Installation		
	A5	Winch Installation	180-1	180
	A5	Winch Shift Control Assembly	181-1	181
	A5	Winch Assembly	182-1	182
	A5	Winch Hydraulic Motor Assembly – MC3F1A19D15B	183-1	183
	A5	Stage Three Carrier Assembly – 13215E2355	184-1	184
	A5	Stage Two Carrier Assembly – 10908580	185-1	185
	A5	Stage One Carrier Assembly – 13214E2903	186-1	186
Group A6		Special Purpose Kits		
	A6	Winch Cover Parts Kit	187-1	187
Group BB2		Repair Parts Kits		
	BB2	Repair Parts Kits	Kit-1	Kit
Group A7		Bulk Items		
	A7	Bulk Materials List	Bulk-1	Bulk
Section III		SPECIAL TOOLS LIST		
Group AY		Support Equipment and Special Tools		
	AY	Special Tools – Unit, Direct, and General Support	188-1	188
	AY	Parts Kit, Hydraulic Troubleshooting – P/N 5705562	189-1	189
	AY	Socket Set, Socket Wrench – P/N 208FA	190-1	190
	AY	Wrench Set, Open End – P/N 5705565	191-1	191
	AY	Wrench Set, Crowfoot – P/N 5705566	192-1	192
	AY	Kit, Thread Insert – P/N K4-621-621L	193-1	193
	AY	Drill Set, Twist (Cobalt) – P/N DBC299	194-1	194

TABLE OF CONTENTS (Continued)

		Page	Illus Figure
Group BB3	Support Equipment and Special Tools Kits		
	BB3 Unit, Direct, and General Support Maintenance Special Tool Kits .	Kit-5	Kit
Section IV	NATIONAL STOCK NUMBER AND PART NUMBER INDEX	I-1	

SECTION I. INTRODUCTION

1. Scope.

This Repair Parts and Special Tools List (RPSTL) lists spares and repair parts; special tools; special test, measurement, and diagnostic equipment (TMDE); and other special support equipment required for performance of unit, direct support, and general support maintenance of the Armored Combat Earthmover, M9 (including depot maintenance spares and repair parts).It authorizes the requisitioning, issue, and disposition of spares, repair parts, and special tools as indicated by the source, maintenance, and recoverability (SMR) codes.

2. General.

This RPSTL is divided into the following sections:

a. Section II, Repair Parts List. A list of spares and repair parts authorized for use in the performance of maintenance. The list also includes parts which must be removed for replacement of the authorized parts. Parts lists are composed of functional groups in ascending alphanumeric sequence, with the parts in each group listed in figure and item number sequence. Bulk materials are listed at the end of Section II.

b. Section III, Special Tools List. A list of special tools, special TMDE, and other special support equipment authorized by this RPSTL for the performance of maintenance.

c. Section IV, National Stock Number and Part Number Index. A list, in ascending National Item Identification Number (NIIN) (last nine numerals) sequence, of all National stock numbers (NSN) appearing in the listings; followed by a list, in alphanumeric sequence, of all part numbers appearing in the listings. National stock numbers and part numbers are cross-referenced to each illustration figure and item number appearance.

3. Explanation of Columns.

The following provides an explanation of columns found in the tabular listings:

a. Item number. The number used to identify each item called out in the illustration.

b. Source, Maintenance, and Recoverability (SMR) Codes. The SMR code is a five position code containing supply/requisitioning information, maintenance category authorization criteria, and disposition instructions.

(1) *Source code.* Source codes are assigned to support items to indicate the manner of acquiring support items for maintenance, repair, or overhaul of end items. Source codes are entered in the first and second positions of the uniform SMR code format as follows:

Code	Definition
PA –	Item procured and stocked for anticipated or known usage.
PB –	Item procured and stocked for insurance purpose because essentiality dictates that a minimum quantity be available in the supply system.
PC –	Item procured and stocked and which otherwise would be coded PA except that it is deteriorative in nature.
PD –	Support item, excluding support equipment, procured for initial issue or outfitting and stocked only for subsequent or additional issue or outfittings. Not subject to automatic replenishment.
PE –	Support equipment procured and stocked for initial issue or outfitting to specified maintenance repair activities.
PF–	Support equipment which will not be stocked but which will be centrally procured on demand.
PG –	Item procured and stocked to provide for sustained support for the life of the equipment. It is applied to an item peculiar to the equipment which, because of probable discontinuance or shutdown of production facilities, would prove uneconomical to reproduce at a later time.
KD –	An item of a depot overhaul/repair kit and not purchased separately. Depot kit defined as a kit that provides items required at the time of overhaul or repair.
KF –	An item of a maintenance kit and not purchased separately. Maintenance kit defined as a kit that provides an item that can be replaced at unit or DS/GS levels of maintenance.
KB –	Item included in both a depot overhaul/repair kit and a maintenance kit.
MO –	Item to be manufactured or fabricated at unit level.
MF –	Item to be manufactured or fabricated at the direct support maintenance level.
MH –	Item to be manufactured or fabricated at the general support maintenance level.
MD –	Item to be manufactured or fabricated at the depot maintenance level.
AO –	Item to be assembled at unit level.
AF –	Item to be assembled at direct support maintenance level.
AH –	Item to be assembled at general support maintenance level.
AD –	Item to be assembled at depot maintenance level.
XA –	Item is not procured or stocked because the requirements for the item will result in the replacement of the next higher assembly.
XB –	Item is not procured or stocked. If not available through salvage, requisition.
XC –	Installation drawing, diagram, instruction sheet, field service drawing, that is identified by manufacturer's part number.
XD –	A support item that is not stocked. When required, item will be procured through normal supply channels.

Note

Cannibalization or salvage may be used as a source of supply for any items coded above except those coded XA and aircraft support items as restricted by AR 700-42.

(2) *Maintenance code.* Maintenance codes are assigned to indicate the levels of maintenance authorized to USE and REPAIR support items. The maintenance codes are entered in the third and fourth position of the uniform SMR code format as follows:

a. The maintenance code entered in the third position will indicate the lowest maintenance level authorized to remove, replace, and use the support item. The maintenance code entered in the third position will indicate one of the following levels of maintenance:

Code	Application/Explanation
C –	Crew or operator maintenance performed within unit maintenance.
O –	Support item is removed, replaced, used at the unit level.
F –	Support item is removed, replaced, used at the direct support level.
H –	Support item is removed, replaced, used at the general support level.
D –	Support items that are removed, replaced, used at depot, mobile depot, or specialized repair activity only.

b. The maintenance code entered in the fourth position indicates whether the item is to be repaired and identifies the lowest maintenance level with the capability to perform complete repair (i.e., all authorized maintenance functions). This position will contain one of the following codes:

Code	Application/Explanation
O –	The lowest maintenance level capable of complete repair of the support item is the unit level.
F –	The lowest maintenance level capable of complete repair of the support item is the direct support level.
H –	The lowest maintenance level capable of complete repair of the support item is the general support level.
D –	The lowest maintenance level capable of complete repair of the support item is the depot level, performed by depot or specialized repair activity.
L –	Repair restricted to designated specialized repair activity.
Z –	Nonrepairable. No repair is authorized.
B –	No repair is authorized. The item may be reconditioned by adjusting, lubricating, etc., at the user level. No parts or special tools are procured for the maintenance of this item.

(3) *Recoverability code.* Recoverability codes are assigned to support items to indicate the disposition action on unserviceable items. The recoverability code is entered in the fifth position of the uniform SMR code format as follows:

Recoverability Code	Application/Explanation
Z –	Nonrepairable item. When unserviceable, condemn and dispose at the level indicated in position 4.
O –	Repairable item. When uneconomically repairable, condemn and dispose at unit level.
F –	Repairable item. When uneconomically repairable, condemn and dispose at the direct support level.
H –	Repairable item. When uneconomically repairable, condemn and dispose at the general support level.
D –	Repairable item. When beyond lower level repair capability, return to depot. Condemnation and disposal not authorized below depot level.
L –	Repairable item. Repair, condemnation and disposal not authorized below depot/specialized repair activity level.
A –	Item requires special handling or condemnation procedures because of specific reasons f(i.e., precious metal content, high dollar value, critical material or hazardous material). Refer to appropriate manuals/directives for specific instructions.

c. Federal Supply Code for Manufacturer (FSCM). The FSCM is a 5-digit numeric code which is used to identify the manufacturer, distributor, or Government agency, etc., that supplies the item.

d. Part Number. Indicates the primary number used by the manufacturer (individual, company, firm, corporation, or Government activity), which controls the design and characteristics of the item by means of its engineering drawings, specifications, standards, and inspection requirements, to identify an item or range of items.

Note

When a National stock numbered (NSN) item is requisitioned, the item received may have a different part number than the part being replaced.

e. Description. Indicates the Federal item name and, if required, a minimum description to identify the item. Items that are included in kits and sets are listed below the name of the kit or set with the quantity of each item in the kit or set indicated in the quantity incorporated in unit column. In the Special Tools List, the initial basis of issue (BOI) appears as the last line in the entry for each special tool, special TMDE, and other special support equipment. When density of equipments supported exceeds density spread indicated in the basis of issue, the total authorization is increased accordingly.

f. Quantity. Indicates the quantity of the item used in the breakout shown on the illustration figure, which is prepared for a functional group, subfunctional group, or an assembly. A "V" appearing in this column in lieu of a quantity indicates that no specific quantity is applicable, (e.g., shims, spacers, etc.).

4. Special Information

a. Detailed manufacturing instructions for items source coded to be manufactured or fabricated are found in TM 5-2350-262-20 and TM 5-2350-262-34 maintenance manuals. Bulk materials required to manufacture items are listed in the Bulk Materials List in this manual.

b. Detailed assembly instructions for items source coded to be assembled are found in TM 5-2350-262-20 and TM 5-2350-262-34 maintenance manuals. Assembly components are listed immediately following the item to be assembled.

c. Repair parts kits and gasket sets appear as the last entries in the repair parts listing for the figures in which their parts are listed as repair parts.

Note

"P" source coded items with missing National stock numbers are items which are not recorded in the Army Master Data File (AMDF) and cannot be requisitioned from the supply system. When these NSNs are broadcast in the AMDF, they will be provided by a change to the manual. If justified, these items may be requisitioned on an exception basis using the part number and FSCM listed in this RPSTL.

d. The following publications pertain to the Armored Combat Earthmover (ACE), M9 vehicle and its components:

LO 5-2350-262-12
Lubrication Order

TM 5-2350-262-10
Operator's Manual

TM 5-2350-262-10-HR
Hand Receipt Covering Components of End Item (COEI), Basic Issue Items (BII), and Additional Authorization List (AAL)

TM 5-2350-262-20-1
TM 5-2350-262-20-2
Unit Maintenance Manual

TM 5-2350-262-34
Direct and General Support Maintenance Manual

TM 5-2815-240-34&P
Direct and General Support Maintenance Manual (Including Repair Parts and Special Tools List) for Engine; Diesel: Liquid Cooled V-Type, Eight Cylinder, Cummins Model V903C.

TM 9-2920-225-34
(Generator)

TM 9-2920-225-34P
(Generator) Maintenance Manual and Repair Parts and Special Tools List for Direct Support and General Support Maintenance, Repair Parts and Special Tools for: Prestolite, Leece-Neville and AC Delco.

TM 9-2920-242-35
Delco (starter) Direct and General Support Maintenance Manual including Repair Parts.

TM 9-2920-243-34
Leece-Neville (starter) Direct and General Support Maintenance Manual including Repair Parts.

TM 9-2920-248-35
Prestolite (starter) Direct and General Support Maintenance Manual including Repair Parts.

TM 9-6140-200-14
Operator's, Organizational, Direct Support and General Support Maintenance Manual for Lead-Acid Storage Batteries: 4HN, 24 V, MS75047-1; 2HN, 12 V; 6 TN, 12 V.

TM 3-4240-276-30&P
Direct Support Maintenance Manual (Including Repair Parts and Special Tools List) for Purifier, Air: M2A1, M2A2, and Precleaner and Particulate Filter Assembly: M1A1-19.

5. How to Locate Repair Parts.

a. When Part Number is Unknown:

(1) *First.* Using the table of contents, determine the functional subgroup within which the repair part belongs. This is necessary since illustrations are prepared for functional subgroups, and listings are divided into the same groups.

(2) *Second.* Find the illustration covering the subgroup to which the repair part belongs.

(3) *Third.* Identify the repair part on the illustration and note the illustration figure and item number of the repair part.

(4) *Fourth.* Using the Repair Parts List, find the figure and item number noted on the illustration.

b. When National Stock Number or Part Number is Known:

(1) *First.* Using the Index of National Stock Numbers and Part Numbers, find the pertinent National stock number or part number. This index is in ascending NIIN (last nine numerals) sequence, followed by a list of part numbers in ascending alphanumeric sequence, cross-referenced to the illustration figure number and item number.

(2) *Second.* After finding the figure and item number, locate the figure and item number in the repair parts List.

6. Abbreviations.

The abbreviations used in this publication are common in trade practice and MIL-STD-12, Military Standard Abbreviations for use on Drawings, and in Specifications, Standards and Technical Documents.

Abbreviation	Explanation
AAL	Additional Authorization List
AC	Alternating Current
ACE	Armored Combat Earthmover
ADPTR	Adapter
AMDF	Army Master Data File
AR	As Required
ASSY	Assembly
BLK	Black
BII	Basic Issue Items
BOI	Basis of Issue
BRG	Bearing
CKT BKR	Circuit Breaker
CL	Class
COEI	Components of End Item
CONN	Connector
CTSK	Countersunk
DEG	Degree
DIA	Diameter
DS	Direct Support
EA	Each
ELEC	Electrical
EXT	External
F	Forward
FIG	Figure
FIL	Fillister
FILH	Fillister Head
FL	Flat
FLH	Flat Head
FSCM	Federal Supply Code for Manufacturer
FT	Foot
GA	Gage
GND	Ground
GR	Grade
GS	General Support
H	High
HD	Head
HD	Hundred
HDLS	Headless
HEX	Hexagon
HEX HD	Hexagonal Head
ID	Inside Diameter
ILLUS	Illustration
IN	Inch
INC	Incorporated
INTL	Internal
L	Low
LB	Pound
LG	Length
LH	Left hand
LKWR	Lock Wire
LUB	Lubricate
LVL	Level
MACH	Machine
MFD	Manufactured
MIL	Military
MS	Military Standard
MTG	Mounting
NIIN	National Item Identification Number
NO	Number
NOM	Nominal
NPN	No Part Number
NSN	National Stock Number
OD	Outside Diameter
ORG	Organizational
OVE	On-Vehicle Equipment
OVS	Oversize
P/N	Part Number
PG	Package
PSI	Pounds Per Square Inch
QTY	Quantity
R	Reverse
RBR	Rubber
RD	Round
RH	Right Hand
RLF	Relief
RLR	Roller
RND	Round
RPSTL	Repair Parts and Special Tools List
SAE	Society of American Engineers
SCH	Socket Head
SKT	Socket
SLTD	Slotted
SLVG	Sleeving
SMR	Source, Maintenance, and Recoverability
SP	Speed
SPEC	Specification
SQ	Square
STD	Standard
STE/ICE	Simplified Test Equipment for Internal Combustion Engines
STL	Steel
STR	Straight
SYN	Synthetic
THD	Thread
THK	Thick
TM	Technical Manual
TMDE	Test, Measurement, and Diagnostic Equipment
TRH	Truss Head
TRK	Track
U/M	Unit of Measure
UN	Unified
V	Variable
V	Volt
VDC	Direct-Current Volts
WG	Wire Gage
WP	Water Pump
WSHR	Washer
XMSN	Transmission
YD	Yard

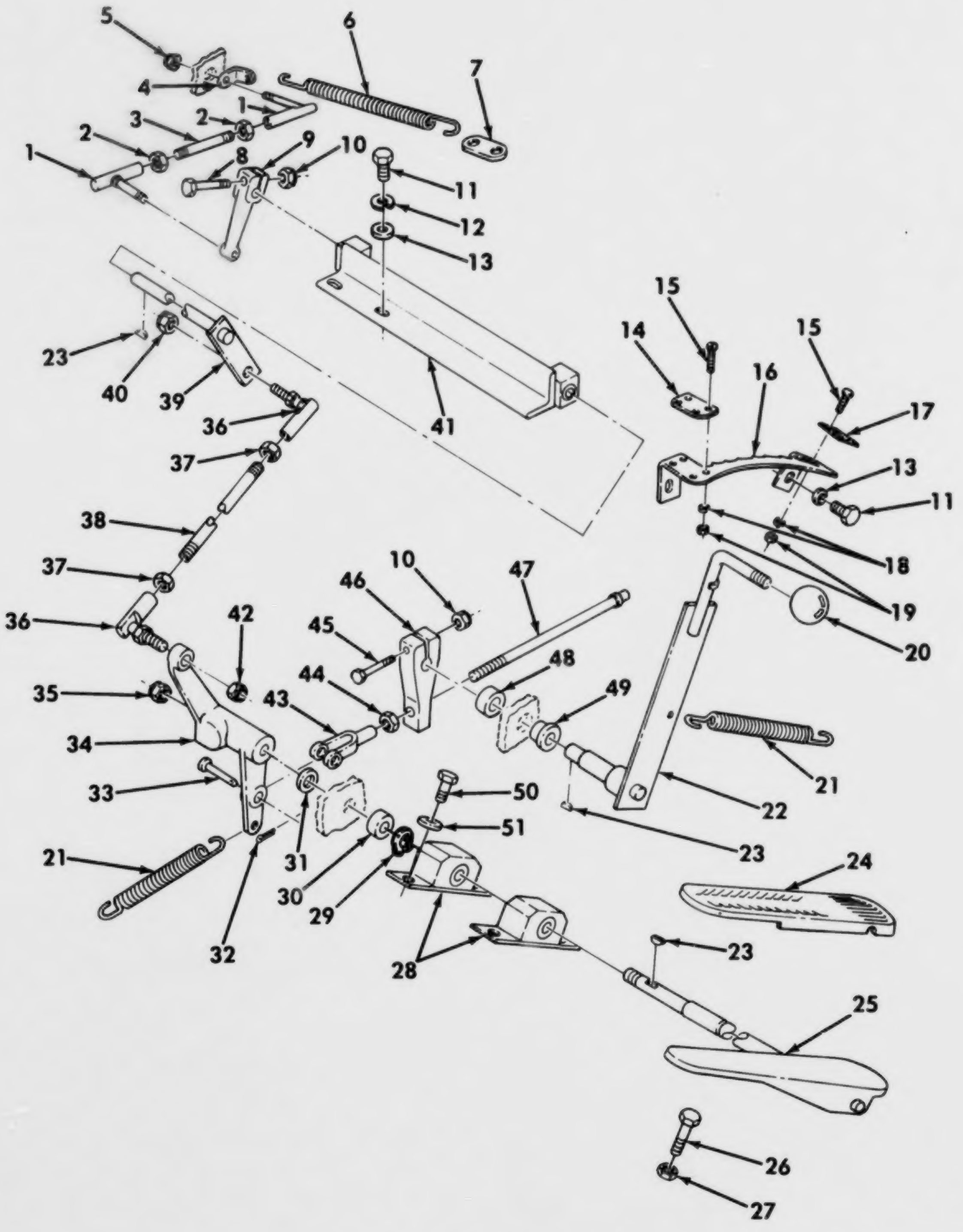

Figure 1. Accelerator Linkage.

(1) ITEM NO	(2) SMR CODE	(3) CAGEC	(4) PART NUMBER	(5) DESCRIPTION AND USABLE ON CODES(UOC)	(6) QTY
				GROUP AA: ACCELERATOR INSTALLATION FIG.1 ACCELERATOR LINKAGE	
1	PAOZZ	78643	R107	BALL,JOINT ROD END	2
2	PAOZZ	96906	MS35691-5	NUT,PLAIN,HEXAGON	2
3	PAOZZ	97403	13214E2825	STUD,PLAIN	1
4	PAOZZ	97403	13214E2536-1	CONNECTING LINK,RIG	1
5	PAOZZ	96906	MS17829-4F	NUT,SELF-LOCKING,HE	1
6	PAOZZ	96906	MS24586-263	SPRING,HELICAL,EXTE	1
7	PAOZZ	97403	13214E2536-2	CONNECTING LINK,RIG	1
8	PAOZZ	96906	MS90726-38	SCREW,CAP,HEXAGON H	1
9	PBOZZ	97403	13211E8987	LEVER,REMOTE CONTRO	1
10	PAOZZ	96906	MS21083N5	NUT,SELF-LOCKING,HE	2
11	PAOZZ	96906	MS90728-60L	BOLT,SELF-LOCKING	4
12	PAOZZ	96906	MS35338-41	WASHER,LOCK	2
13	PAOZZ	96906	MS27183-14	WASHER,FLAT	4
14	PFOZZ	19207	12325750	PLATE,IDENTIFICATIO	1
15	PAOZZ	96906	MS35206-245	SCREW,MACHINE	8
16	PFOZZ	97403	13211E8999	PLATE,HAND THROTTLE	1
17	PFOZZ	19207	12325749	PLATE,IDENTIFICATIO	1
18	PAOZZ	96906	MS35335-31	WASHER,LOCK	8
19	PAOZZ	96906	MS35649-282	NUT,PLAIN,HEXAGON	8
20	PAOZZ	72512	55M	KNOB	1
21	PAOZZ	97403	13211E9020	SPRING,HELICAL,EXTE ACCELERATOR	2
22	PAOZZ	19207	12332540	LEVER,MANUAL CONTRO	1
23	PAOZZ	96906	MS35756-6	KEY,WOODRUFF	3
24	PAOZZ	06853	240069	PAD,PEDAL	1
25	PAOZZ	19207	12334770	PEDAL,CONTROL	1
26	PAOZZ	96906	MS90728-65	BOLT,MACHINE	1
27	PAOZZ	96906	MS35691-17	NUT,PLAIN,HEXAGON	1
28	PAOZZ	97403	13214E2685	BRACKET,BEARING	2
29	PAOZZ	96906	MS16624-1075	RING,RETAINING	1
30	PAOZZ	19207	12335264-1	SPACER,SLEEVE	1
31	PAOZZ	96906	MS27183-23	WASHER,FLAT	1
32	PAOZZ	96906	MS24665-281	PIN,COTTER	1
33	PAOZZ	96906	MS35810-4	PIN,STRAIGHT,HEADED	1
34	PFOZZ	97403	13211E8989	BELL CRANK	1
35	PAOZZ	96906	MS21083N10	NUT,SELF-LOCKING,HE	1
36	PAOZZ	78643	R111	BALL JOINT	2
37	PAOZZ	96906	MS35691-37	NUT,PLAIN,HEXAGON	2
38	PAOZZ	97403	13211E9351-3	STUD,PLAIN	1
39	PAOZZ	19207	12355385	SHAFT,STRAIGHT	1
40	PAOZZ	96906	MS21083N8	NUT,SELF-LOCKING,HE	1
41	PAOZZ	97403	13211E8986	BRACKET,ANGLE	1
42	PAOZZ	96906	MS17829-8F	NUT,SELF-LOCKING,HE	1
43	PAOZZ	96906	MS35812-4	CLEVIS,ROD END	1
44	PAOZZ	96906	MS35691-21	NUT,PLAIN,HEXAGON	1
45	PAOZZ	96906	MS90727-39	SCREW,CAP,HEXAGON H	1
46	PFOZZ	97403	13211E8990	CONNECTING LINK,RIG	1
47	PAOZZ	97403	13211E8992	ROD,THREADED END	1
48	PAOZZ	19207	12335264-2	SPACER,SLEEVE	1
49	PAOZZ	97403	13214E2644-1	BEARING,SLEEVE	1

(1) ITEM NO	(2) SMR CODE	(3) CAGEC	(4) PART NUMBER	(5) DESCRIPTION AND USABLE ON CODES(UOC)	(6) QTY
50	PAOZZ	96906	MS90725-33	SCREW,CAP,HEXAGON H..................	4
51	PAOZZ	96906	MS27183-12	WASHER,FLAT...........................	4

END OF FIGURE

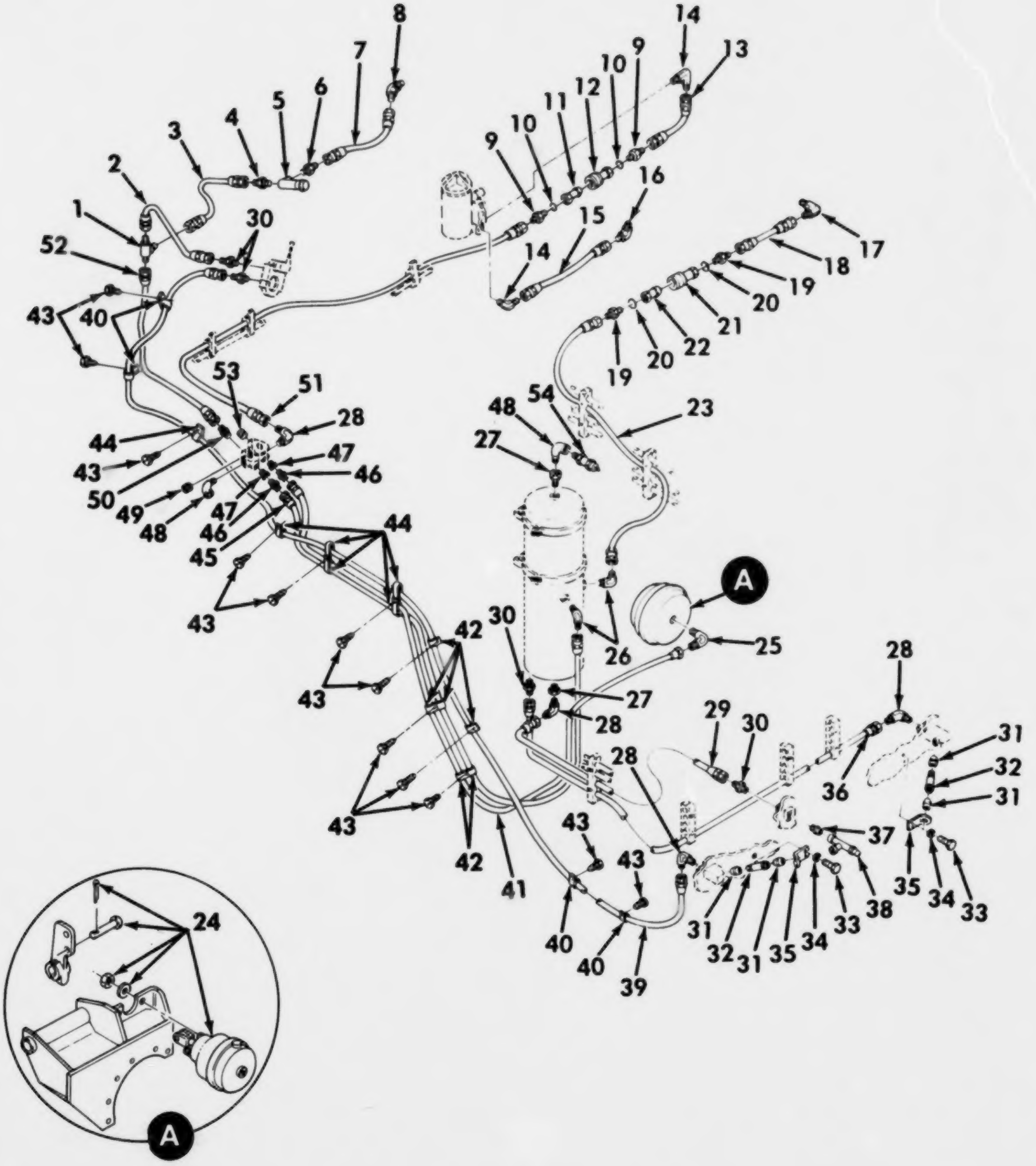

Figure 2. Air Brake Lines and Fittings.

(1) ITEM NO	(2) SMR CODE	(3) CAGEC	(4) PART NUMBER	(5) DESCRIPTION AND USABLE ON CODES(UOC)	(6) QTY
				GROUP AB: AIR SYSTEM INSTALLATION FIG.2 AIR BRAKE LINES AND FITTINGS	
1	PAOZZ	96906	MS51510A6	TEE,TUBE	1
2	PAOZZ	97403	13211E9162	TUBE ASSEMBLY,METAL	1
3	PAOZZ	19207	12332529	TUBE ASSEMBLY,METAL	1
4	PAOZZ	96906	MS51500A6-2	ADAPTER,STRAIGHT,PI	1
5	PAOZZ	82484	K132-3	VALVE,REGULATING,FL	1
6	PAOZZ	96906	MS51500A4	ADAPTER,STRAIGHT,PI	1
7	PAOZZ	96906	MS52103A040060R	HOSE ASSEMBLY,NONME MEDIUM PRESSURE	1
8	PAOZZ	96906	MS51504A4	ELBOW,PIPE TO TUBE	1
9	PAOZZ	96906	MS51525A6-8	ADAPTER,STRAIGHT,TU	2
10	PAOZZ	96906	MS28778-8	PACKING,PREFORMED	2
11	PAOZZ	97111	H3-63-T8	COUPLING HALF,QUICK	1
12	PAOZZ	97111	H3-62SL-T8	COUPLING HALF,QUICK	1
13	PAOZZ	96906	MS52103A060170R	HOSE ASSEMBLY,NONME	1
14	PAOZZ	96906	MS51504A6-2	ELBOW,PIPE TO TUBE	2
15	PAOZZ	96906	MS52103A060100R	HOSE ASSEMBLY,NONME	1
16	PAOZZ	96906	MS51508A6-2	ELBOW,PIPE TO TUBE	1
17	PAOZZ	81343	8-8 070202CA(CAD)	ELBOW,PIPE TO TUBE	1
18	PAOZZ	96906	MS52103A080170R	HOSE ASSEMBLY,NONME	1
19	PAOZZ	96906	MS51525A8-10	ADAPTER,STRAIGHT,TU	2
20	PAOZZ	96906	MS28778-10	PACKING,PREFORMED	2
21	PAOZZ	97111	H4-62SL-T10	COUPLING HALF,QUICK	1
22	PAOZZ	97111	H4-63-T10	COUPLING HALF,QUICK	1
23	PAOZZ	96906	MS52103A080560R	HOSE ASSEMBLY,NONME	1
24	PAOZZ	06853	229293	CHAMBER,AIR BRAKE	1
25	PAOZZ	96906	MS51504A8-4	ELBOW,PIPE TO TUBE	1
26	PAOZZ	96906	MS51504A8	ELBOW,PIPE TO TUBE	2
27	PFOZZ	81348	WW-P-471BDOBCEB	BUSHING,PIPE	2
28	PAOZZ	96906	MS51504A6	ELBOW,PIPE TO TUBE	4
29	PAOZZ	96906	MS52103A060450R	HOSE ASSEMBLY,NONME	1
30	PAOZZ	96906	MS51500A6	ADAPTER,STRAIGHT,PI	4
31	PAOZZ	24617	192075	NIPPLE,PIPE	4
32	PAOZZ	97403	13211E9547	VALVE,BALL	2
33	PAOZZ	96906	MS90728-6	SCREW,CAP,HEXAGON H	4
34	PAOZZ	96906	MS27183-10	WASHER,FLAT	4
35	PFOZZ	97403	13214E2608	BRACKET,ANGLE	2
36	PAOZZ	96906	MS52103A060920R	HOSE ASSEMBLY,NONME	1
37	PAOZZ	96906	MS51846-24	NIPPLE,PIPE	1
38	PAOZZ	30327	87C1-4	VALVE,QUICK OPERATI	1
39	PAOZZ	01276	FA5783GGG1627	HOSE ASSEMBLY,NONME	1
40	PAOZZ	96906	MS21333-74	CLAMP,LOOP	6
41	PAOZZ	96906	MS52103A080930R	HOSE ASSEMBLY,NONME	1
42	PAOZZ	96906	MS21333-75	CLAMP,LOOP	4
43	PAOZZ	96906	MS51851-64	SCREW,TAPPING,THRED	12
44	PAOZZ	96906	MS21334-32	CLAMP,LOOP	6
45	PAOZZ	96906	MS52103A080890R	HOSE ASSEMBLY,NONME	1
46	PAOZZ	96906	MS51500A8	ADAPTER,STRAIGHT,PI	2
47	PAOZZ	81348	WW-P-471BDOBCDC	BUSHING,PIPE	2
48	PAOZZ	96906	MS39230-2	ELBOW,PIPE	2

(1) ITEM NO	(2) SMR CODE	(3) CAGEC	(4) PART NUMBER	(5) DESCRIPTION AND USABLE ON CODES(UOC)	(6) QTY
49	PAOZZ	81348	WW-P-471ACABUD	PLUG,PIPE............................	2
50	PAOZZ	96906	MS51500A6-8	ADAPTER,STRAIGHT,PI..................	1
51	PAOZZ	96906	MS52103A060380R	HOSE ASSEMBLY,NONME..................	1
52	PAOZZ	97403	13211E9161	TUBE ASSEMBLY,METAL..................	1
53	PAOZZ	81348	WW-P-471BDOBCDB	BUSHING,PIPE.........................	1
54	PAOZZ	06853	205105	VALVE,SAFETY RELIEF..................	1

END OF FIGURE

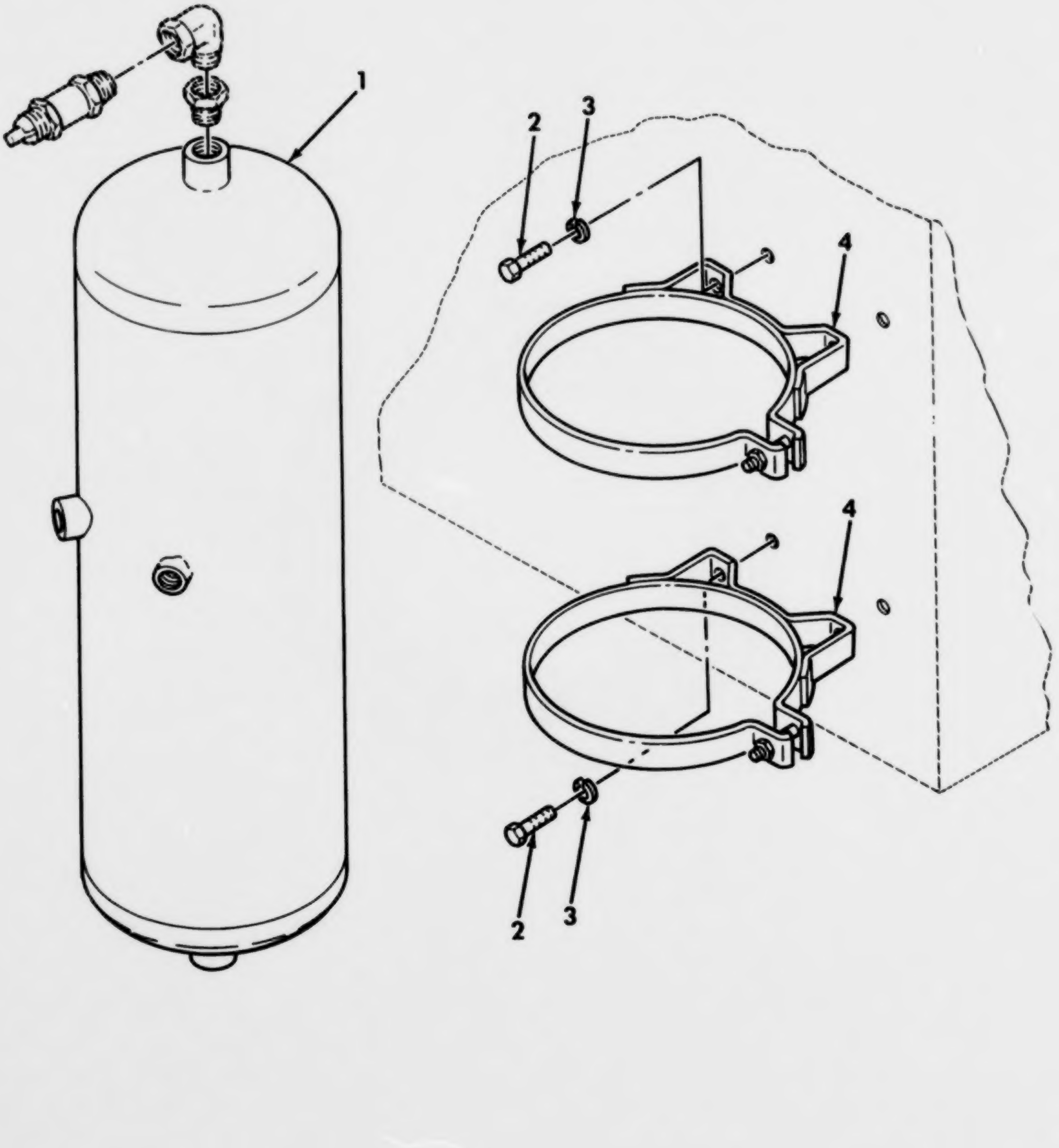

Figure 3. Air Reservoir and Mounting Parts.

(1) ITEM NO	(2) SMR CODE	(3) CAGEC	(4) PART NUMBER	(5) DESCRIPTION AND USABLE ON CODES(UOC)	(6) QTY
				GROUP AB: AIR SYSTEM INSTALLATION FIG.3 AIR RESERVOIR AND MOUNTING PARTS	
1	PAOZZ	06853	227885	TANK,PRESSURE........................	1
2	PAOZZ	96906	MS90728-35	BOLT,MACHINE.........................	4
3	PAOZZ	96906	MS35338-45	WASHER,LOCK..........................	4
4	PAOZZ	18265	P00-4906	CLAMP,LOOP...........................	2

END OF FIGURE

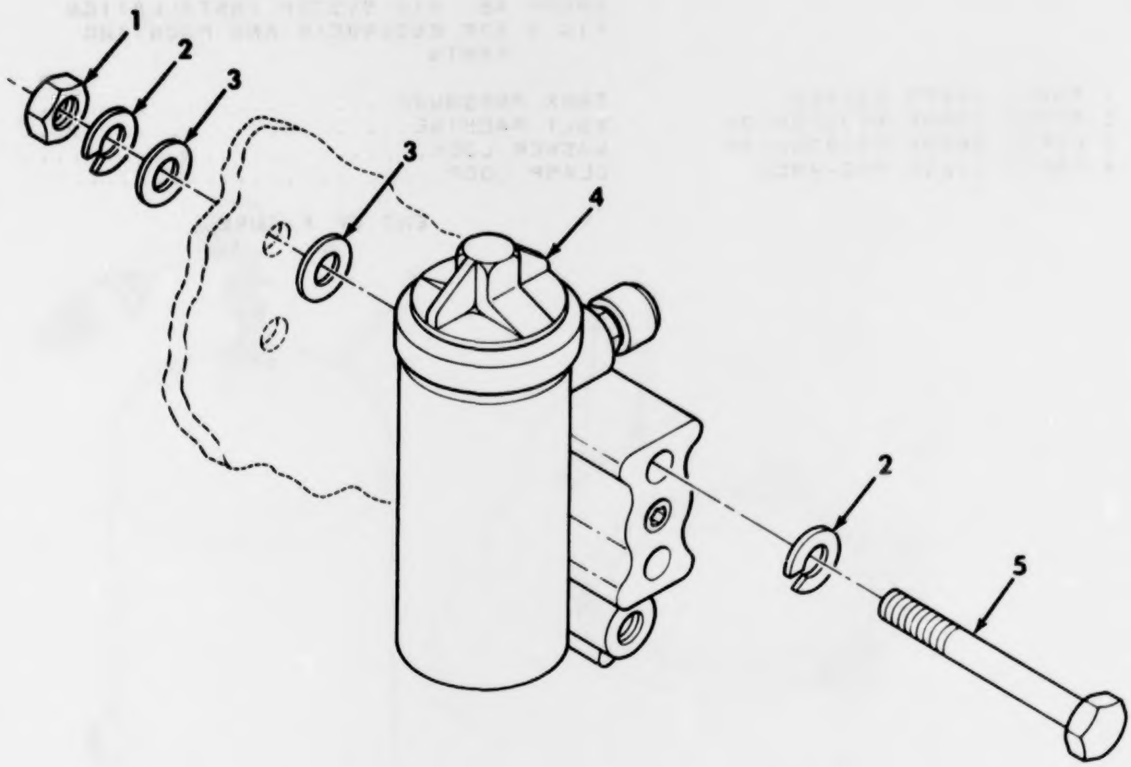

Figure 4. Air Compressor Governor and Mounting Parts.

(1) ITEM NO	(2) SMR CODE	(3) CAGEC	(4) PART NUMBER	(5) DESCRIPTION AND USABLE ON CODES(UOC)	(6) QTY
				GROUP AB: AIR SYSTEM INSTALLATION FIG.4 AIR COMPRESSOR GOVERNOR AND MOUNTING PARTS	
1	PAOZZ	96906	MS51967-5	NUT,PLAIN,HEXAGON	2
2	PAOZZ	96906	MS35338-45	WASHER,LOCK	4
3	PAOZZ	96906	MS27183-12	WASHER,FLAT	4
4	PAOZZ	96906	MS53006-1	GOVERNOR ASSEMBLY,A	1
5	PAOZZ	96906	MS90728-45	SCREW.CAP,HEXAGON H	2

END OF FIGURE

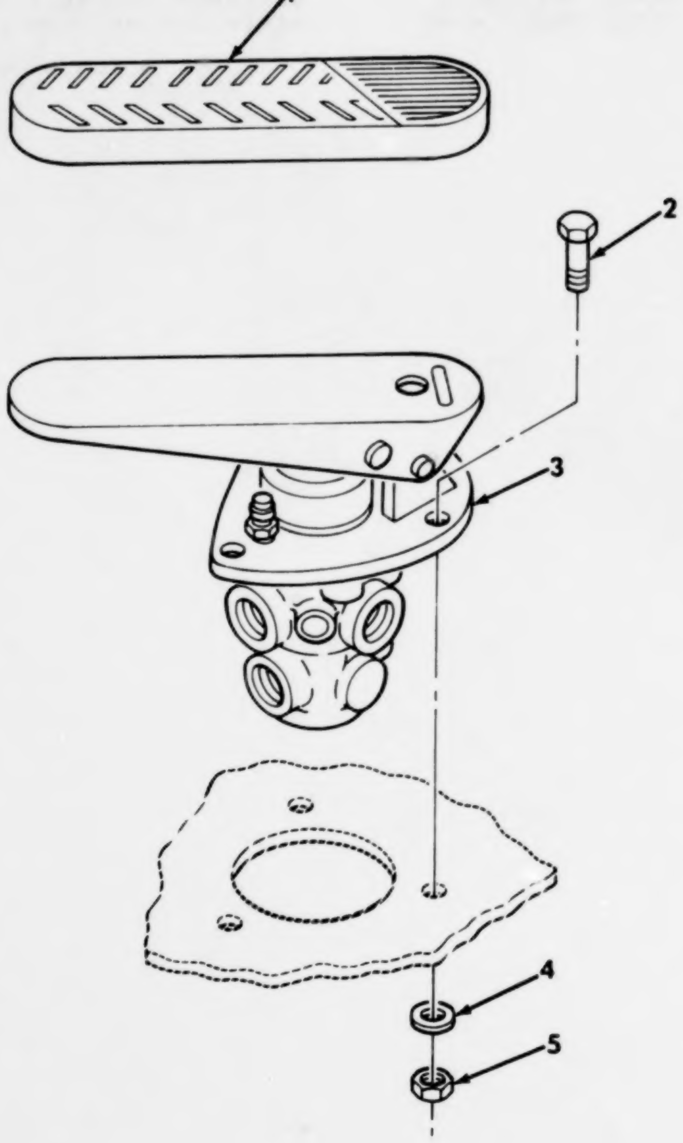

Figure 5. Service Brake Valve and Related Parts.

(1) ITEM NO	(2) SMR CODE	(3) CAGEC	(4) PART NUMBER	(5) DESCRIPTION AND USABLE ON CODES(UOC)	(6) QTY
				GROUP AB: AIR SYSTEM INSTALLATION FIG.5 SERVICE BRAKE VALVE AND RELATED PARTS	
1	PAOZZ	06853	240069	PAD,PEDAL	1
2	PAOZZ	96906	MS90728-35	SCREW,CAP,HEXAGON H	3
3	PAOZZ	06853	101381	VALVE,LINEAR,DIRECT	1
4	PAOZZ	96906	MS27183-12	WASHER,FLAT	3
5	PAOZZ	96906	MS17829-5C	NUT,SELF-LOCKING,HE	3

END OF FIGURE

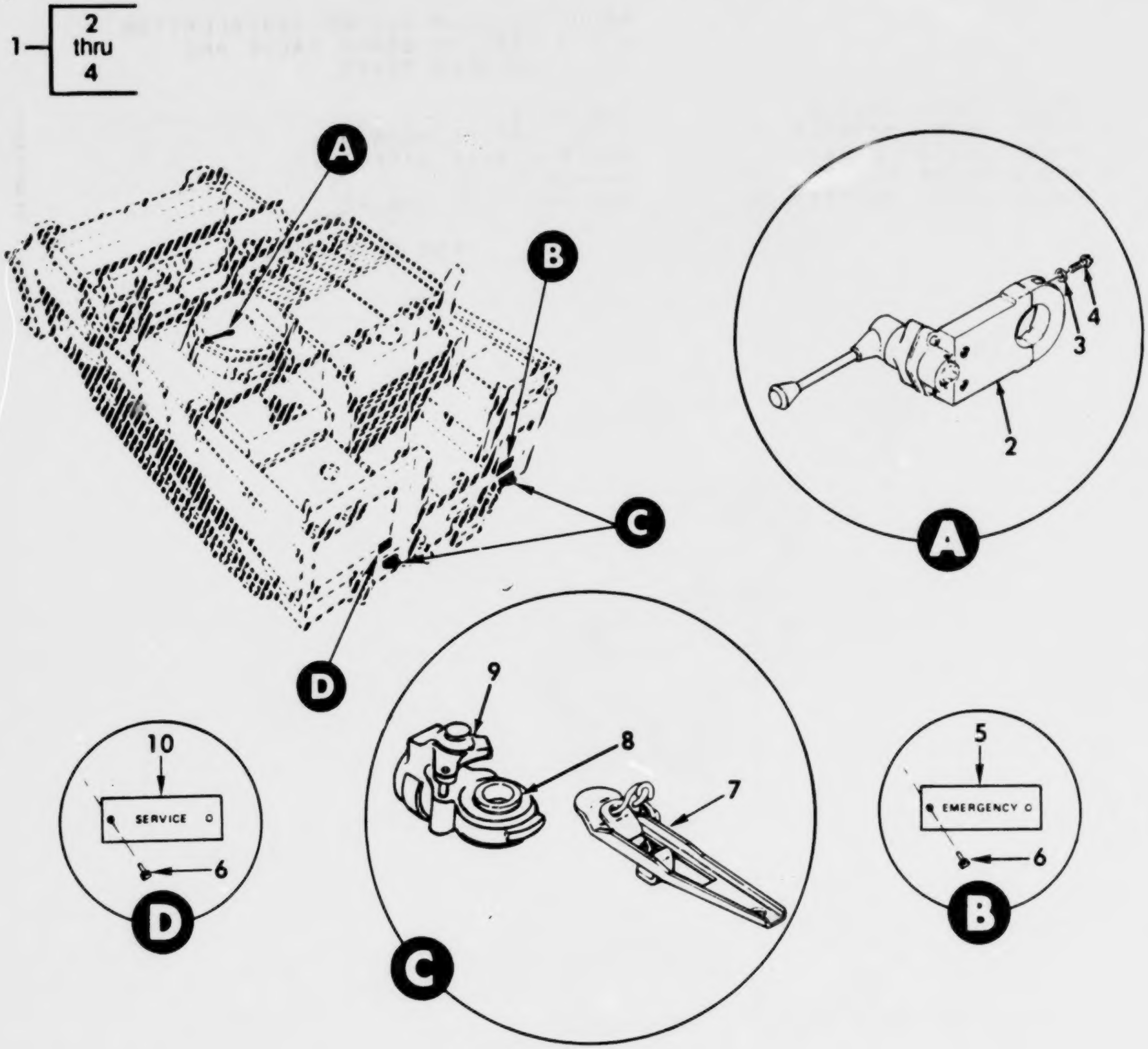

Figure 6. Trailer Brake Valve and Connectors.

GROUP AB: AIR SYSTEM INSTALLATION
FIG.6 TRAILER BRAKE VALVE AND CONNECTORS

(1) ITEM NO	(2) SMR CODE	(3) CAGEC	(4) PART NUMBER	(5) DESCRIPTION AND USABLE ON CODES(UOC)	(6) QTY
1	PAOOO	06853	7010-05	VALVE,BRAKE PNEUMAT	1
2	XAOZZ	06853	102215	.VALVE ASSY,BASIC	1
3	PAOZZ	06853	233997	.WASHER,LOCK	2
4	PAOZZ	06853	240351	.BOLT,MACHINE	2
5	PFOZZ	97403	13204E3300	PLATE,IDENTIFICATIO	1
6	PAOZZ	96906	MS21318-21	SCREW,DRIVE	4
7	PAOZZ	06853	220636	DUMMY COUPLING,AUTO	2
8	PAOZZ	96906	MS35748-1	PACKING,PREFORMED	2
9	PAOZZ	96906	MS35746-1	COUPLING HALF,QUICK	2
10	PFOZZ	97403	13204E3301	PLATE,IDENTIFICATIO	1

END OF FIGURE

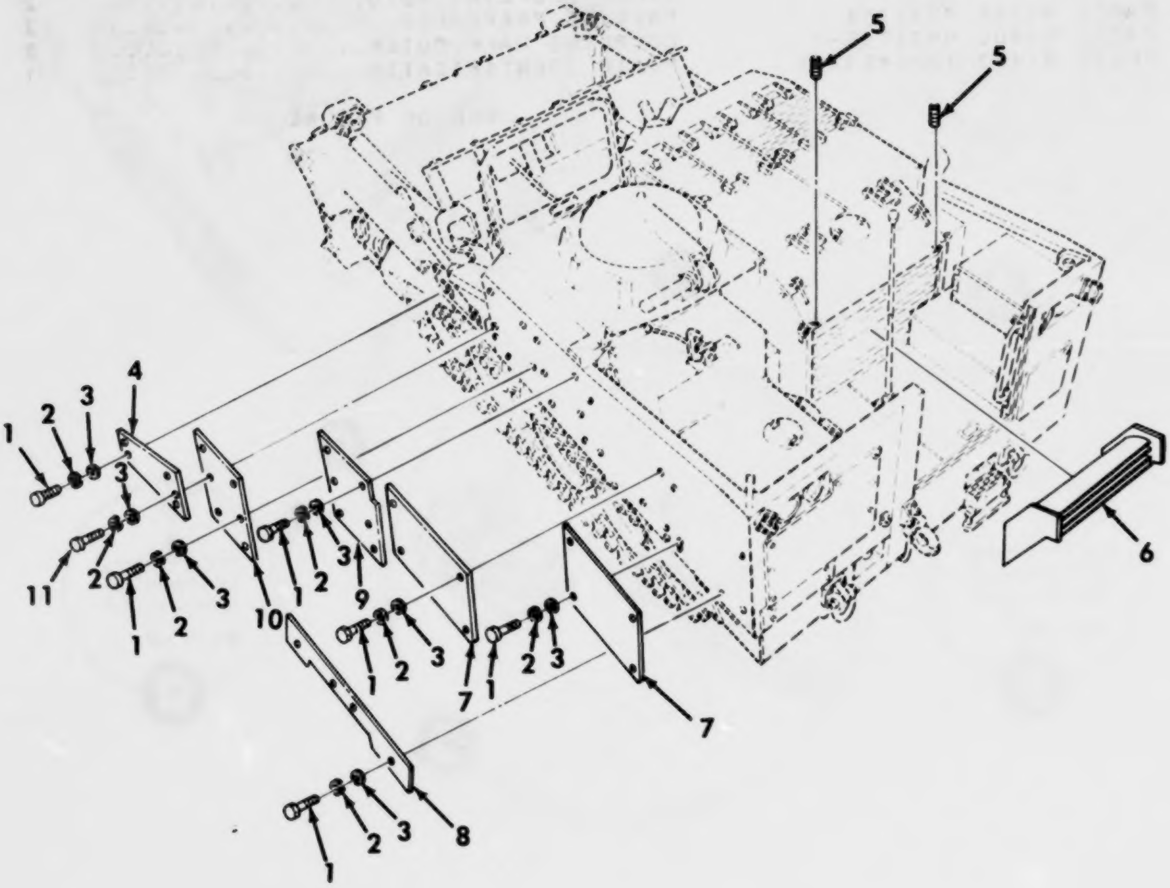

Figure 7. Armor and Mounting Hardware (Sheet 1 of 3)

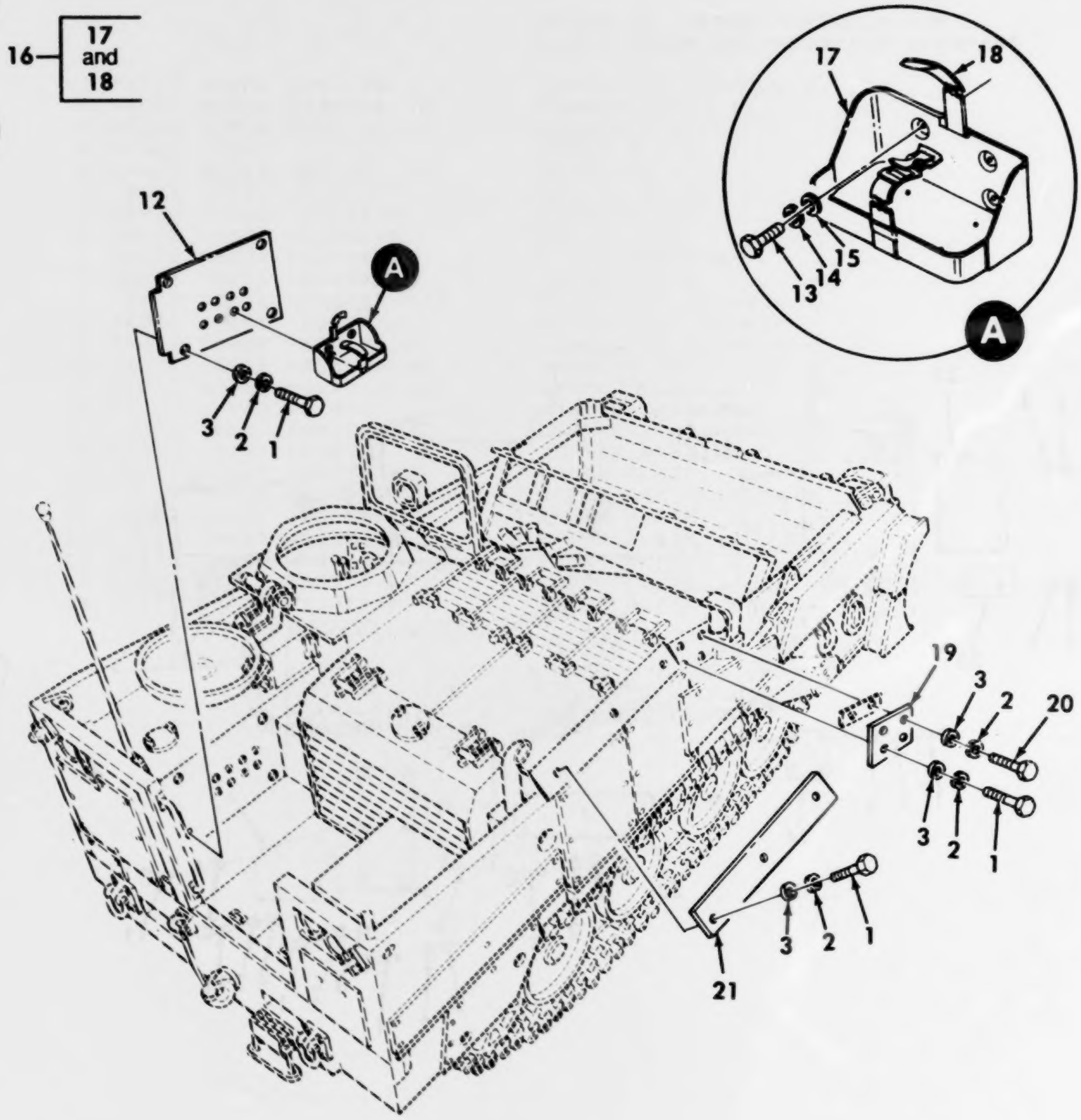

Figure 7. Armor and Mounting Hardware (Sheet 2 of 3)

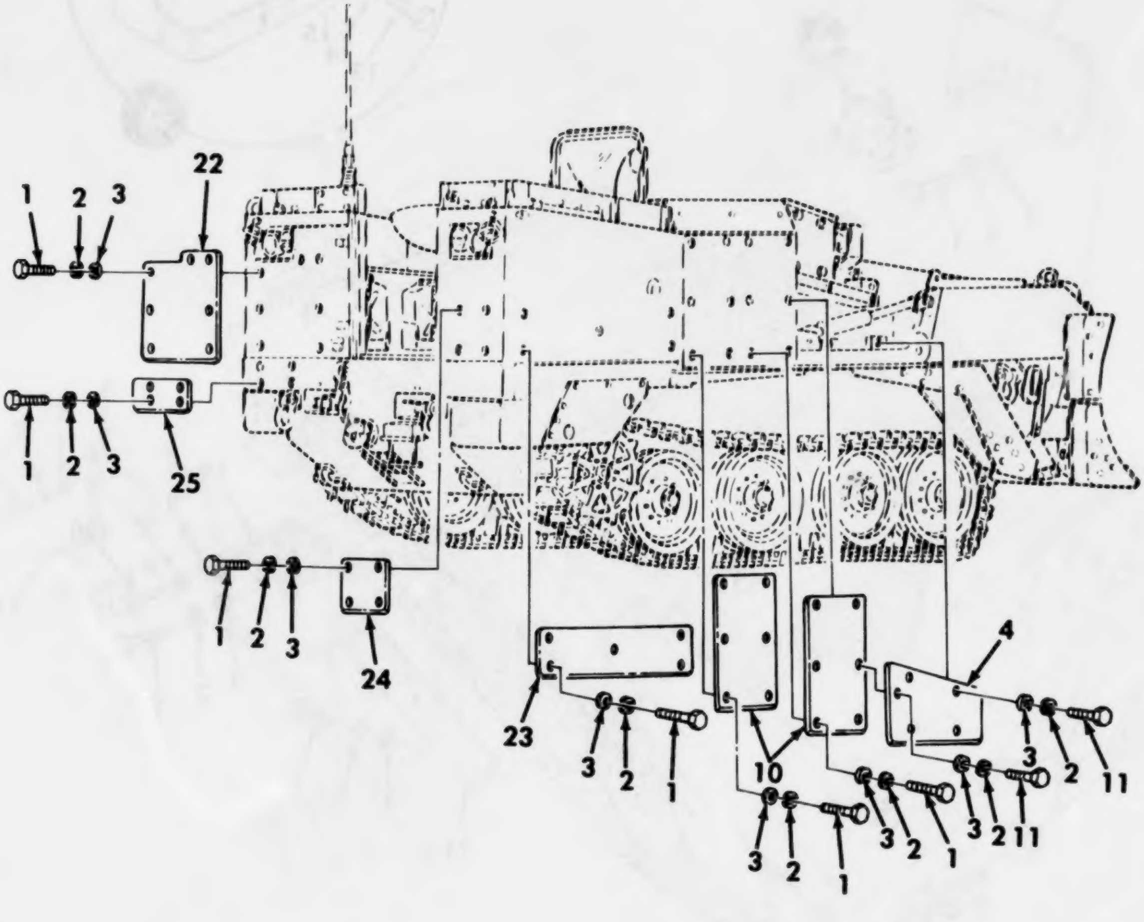

Figure 7. Armor and Mounting Hardware (Sheet 3 of 3)

(1) ITEM NO	(2) SMR CODE	(3) CAGEC	(4) PART NUMBER	(5) DESCRIPTION AND USABLE ON CODES(UOC)	(6) QTY
				GROUP AD: ARMOR INSTALLATION FIG.7 ARMOR AND MOUNTING HARDWARE	
1	PAOZZ	96906	MS90728-111	SCREW,CAP,HEXAGON H................	71
2	PAOZZ	96906	MS35338-48	WASHER,LOCK........................	75
3	PAOZZ	96906	MS27183-18	WASHER,FLAT........................	75
4	PBOZZ	19207	12331831	ARMOR PLATE........................	2
5	PAOZZ	96906	MS51981-74L	SETSCREW...........................	2
6	PBOZZ	19207	12331977	GRILLE,METAL.......................	4
7	PBOZZ	19207	12325836	ARMOR PLATE........................	2
8	PBOZZ	19207	12325848	ARMOR PLATE........................	1
9	PBOZZ	19207	12352570	PLATE,MENDING......................	1
10	PBOZZ	19207	12325835	ARMOR PLATE........................	3
11	PAOZZ	96906	MS90728-113	SCREW,CAP,HEXAGON H................	2
12	PBOZZ	19207	12362072	ARMOR,SUPPLEMENTAL.................	1
13	PAOZZ	96906	MS90728-61	SCREW,CAP,HEXAGON H................	8
14	PAOZZ	96906	MS35338-46	WASHER,LOCK........................	8
15	PAOZZ	96906	MS27183-14	WASHER,FLAT........................	8
16	PAOZZ	07860	C21452	BRACKET ASSEMBLY,LI................	2
17	XAOZZ	19207	7064504	.BRACKET,ASSEMBLY LI...............	1
18	PAOZZ	19207	8690527	.STRAP,WEBBING.....................	1
19	PBOZZ	19207	12331835	ARMOR PLATE........................	1
20	PAOZZ	96906	MS90728-115	SCREW,CAP,HEXAGON H................	2
21	PBOZZ	19207	12325837	ARMOR PLATE........................	1
22	PBOZZ	19207	12357235	ARMOR PLATE........................	1
23	PBOZZ	19207	12325834	ARMOR PLATE........................	1
24	PBOZZ	19207	12357236	ARMOR PLATE........................	1
25	PBOZZ	19207	12325854	ARMOR PLATE........................	1

END OF FIGURE

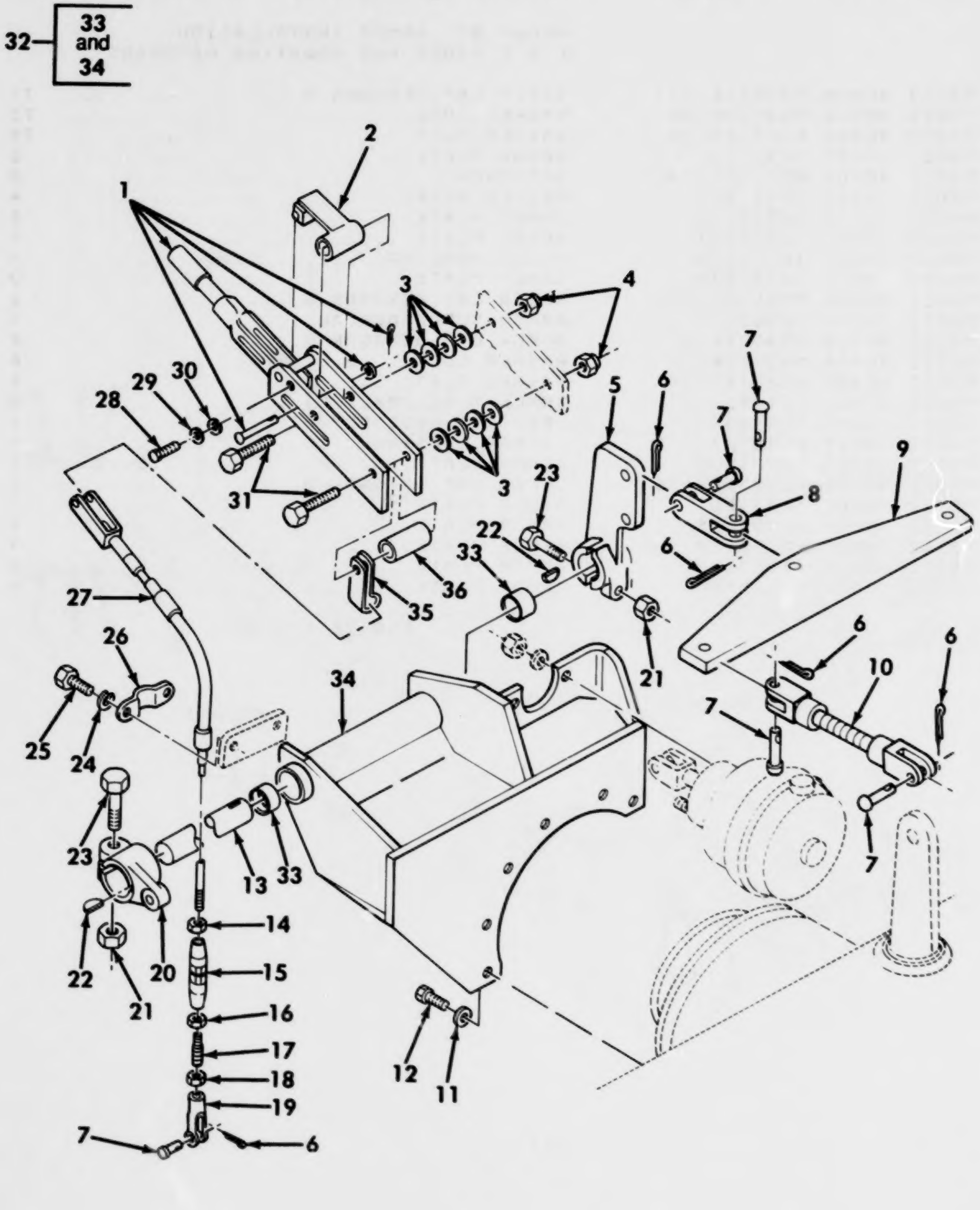

Figure 8. Parking Brake Lever and Linkage.

(1) ITEM NO	(2) SMR CODE	(3) CAGEC	(4) PART NUMBER	(5) DESCRIPTION AND USABLE ON CODES(UOC)	(6) QTY
				GROUP AF: BRAKE CONTROL INSTALLATION FIG.8 PARKING BRAKE LEVER AND LINKAGE	
1	PAOZZ	92867	X18671	LEVER,MANUAL CONTRO..................	1
2	PFOZZ	19207	12334808	BRACKET,ANGLE........................	1
3	PAOZZ	96906	MS27183-12	WASHER,FLAT..........................	8
4	PAOZZ	96906	MS17829-5C	NUT,SELF-LOCKING,HE..................	2
5	PFOZZ	19207	12379442	LEVER,BRAKE CONTROL..................	1
6	PAOZZ	96906	MS24665-353	PIN,COTTER...........................	7
7	PAOZZ	96906	MS35810-6	PIN,STRAIGHT,HEADED..................	7
8	PAOZZ	19207	12379438	CLEVIS,ROD END.......................	1
9	PBOZZ	19207	12379439	BAR,METAL............................	1
10	PFOZZ	19207	12379443	CLEVIS,ROD END.......................	2
11	PAOZZ	96906	MS27183-16	WASHER,FLAT..........................	6
12	PAOZZ	19207	12335098	SCREW,SELF-LOCKING...................	6
13	PFOZZ	19207	12331956	SHAFT,STRAIGHT.......................	1
14	PAOZZ	96906	MS35691-21	NUT,PLAIN,HEXAGON....................	1
15	PAOZZ	96906	MS21251A8L	TURNBUCKLE BODY......................	1
16	PAOZZ	96906	MS27952-32	NUT,PLAIN,HEXAGON....................	1
17	PAOZZ	97403	13211E9545	STUD,STEPPED.........................	1
18	PAOZZ	96906	MS35691-37	NUT,PLAIN,HEXAGON....................	1
19	PAOZZ	96906	MS35812-11	CLEVIS,ROD END.......................	1
20	PFOZZ	97403	13214E2146	LEVER,REMOTE CONTRO BRAKE CABLE....	1
21	PAOZZ	96906	MS51967-20	NUT,PLAIN,HEXAGON....................	2
22	PAOZZ	96906	MS35756-22	KEY,WOODRUFF.........................	2
23	PAOZZ	96906	MS90728-165	SCREW,CAP,HEXAGON H..................	2
24	PAOZZ	96906	MS35338-46	WASHER,LOCK..........................	2
25	PAOZZ	96906	MS90725-58	SCREW,CAP,HEXAGON H..................	2
26	PFOZZ	97403	13214E2303	STRAP,RETAINING......................	1
27	PAOZZ	92867	16382300	CONTROL ASSEMBLY,PU..................	1
28	PAOZZ	96906	MS35207-261	SCREW,MACHINE........................	1
29	PAOZZ	96906	MS27183-42	WASHER,FLAT..........................	1
30	PAOZZ	96906	MS35338-43	WASHER,LOCK..........................	1
31	PAOZZ	96906	MS90728-41	SCREW,CAP,HEXAGON H..................	2
32	PFOOO	19207	12332007	BRACKET ASSEMBLY.....................	1
33	PAOZZ	19207	12331895-6	.BEARING,SLEEVE......................	2
34	XAOZZ	19207	12367739	.BRACKET.............................	1
35	PFOZZ	97403	13214E2317	CLAMP,LOOP...........................	1
36	PFOZZ	97403	13214E2316	SPACER,SLEEVE........................	1

END OF FIGURE

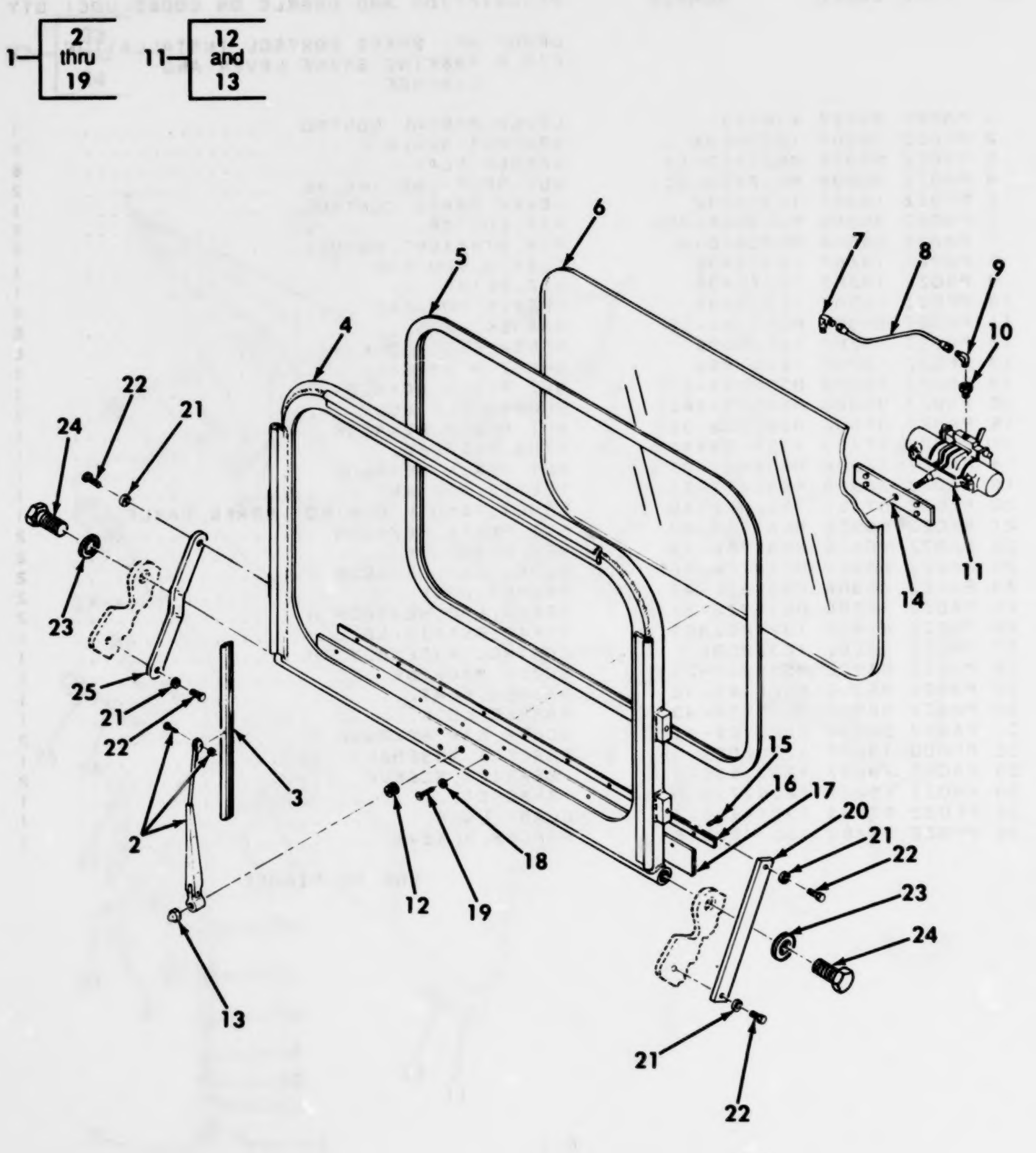

Figure 9. Windshield Assembly and Attaching Parts.

GROUP AG: WINDSHIELD AND CANOPY INSTALLATION

FIG.9 WINDSHIELD ASSEMBLY AND ATTACHING PARTS

(1) ITEM NO	(2) SMR CODE	(3) CAGEC	(4) PART NUMBER	(5) DESCRIPTION AND USABLE ON CODES(UOC)	(6) QTY
1	PAOFF	19207	12362113	WINDOW,VEHICULAR....................	1
2	PAOZZ	82484	S2309	.ARM,WINDSHIELD WIPE................	1
3	PAOZZ	82484	C1100-16	.BLADE,WINDSHIELD WI................	1
4	PAFZZ	19207	12362112	.FRAME,WINDOW,VEHICU................	1
5	PAOZZ	97403	13211E9362	.SEAL,NONMETALLIC SP................	1
6	PAFZZ	19207	12357179	.WINDOW,VEHICULAR...................	1
7	PAOZZ	96906	MS51504A4	.ELBOW,PIPE TO TUBE.................	1
8	PAOZZ	96906	MS52103A040163R	.HOSE ASSEMBLY,NONME................	1
9	PAOZZ	96906	MS51521A4	.ELBOW,TUBE.........................	1
10	PAOZZ	96906	MS51500A4	.ADAPTER,STRAIGHT,PI................	1
11	PAOOO	19207	12335324	.MOTOR,WINDSHIELD WI................	1
12	PAOZZ	82484	S2280-1	..DRIVER,ARM,WINDSHIE...............	1
13	PAOZZ	82484	C1421-1	..NUT,PLAIN,CAP.....................	1
14	PFOZZ	19207	12369133	.PLATE,SPACER.......................	1
15	PAOZZ	96906	MS51850-66	.SCREW,TAPPING,THREA................	9
16	PFOZZ	97403	13204E2493	.SPACER,PLATE.......................	1
17	PAOZZ	97403	13204E2492	.SEAL,NONMETALLIC ST................	1
18	PAOZZ	96906	MS27183-9	.WASHER,FLAT........................	4
19	PAOZZ	2V507	92314A294	.BOLT,SELF-LOCKING..................	4
20	PFOZZ	97403	13211E8687	BRACE,WINDSHIELD....................	1
21	PAOZZ	96906	MS27183-14	WASHER,FLAT.........................	4
22	PAOZZ	96906	MS18154-60	SCREW,CAP,HEXAGON H.................	4
23	PAOZZ	96906	MS27183-27	WASHER,FLAT.........................	2
24	PAOZZ	96906	MS90725-227	SCREW,CAP,HEXAGON H.................	2
25	PFOZZ	19207	12334875	BRACE,WINDOW........................	1

END OF FIGURE

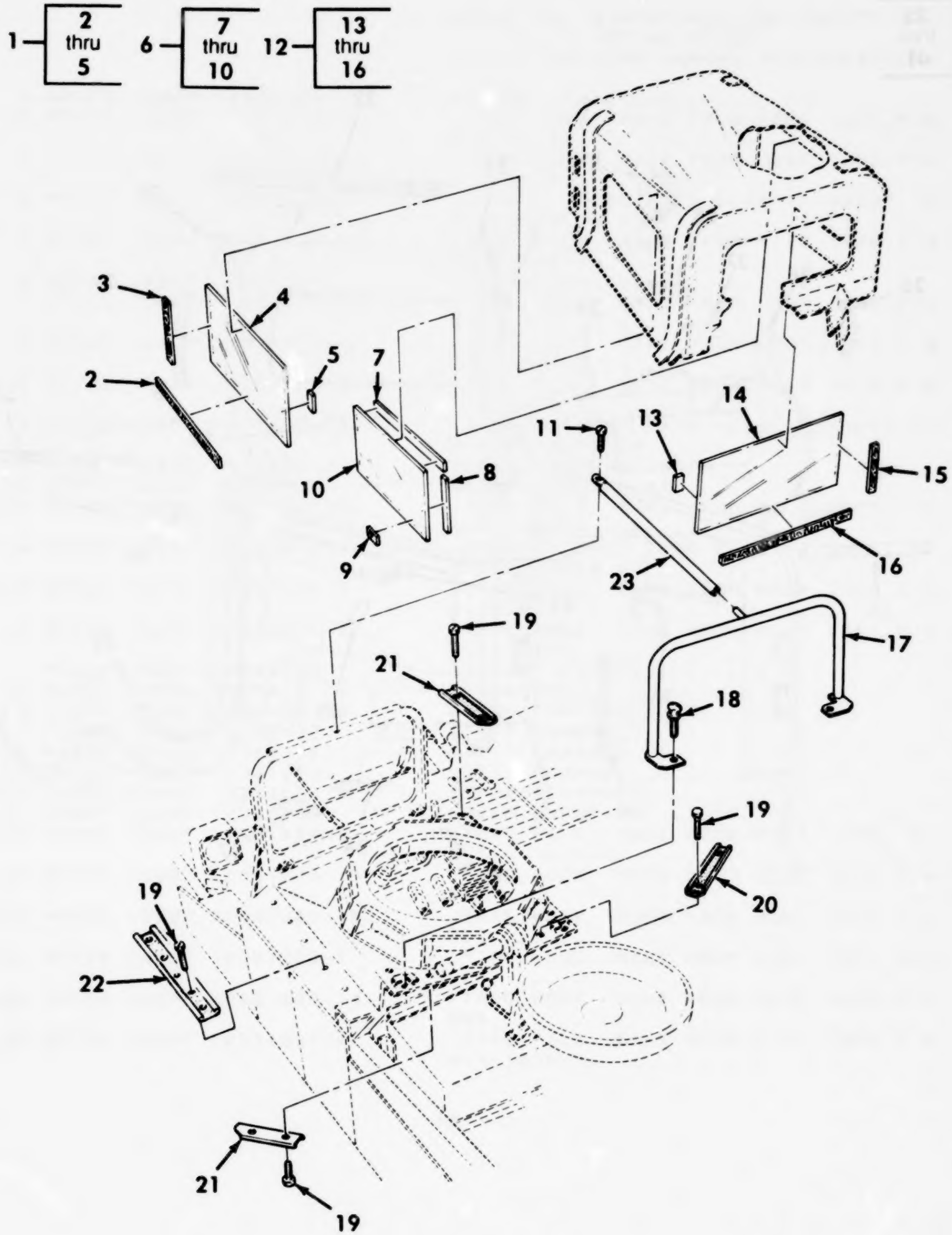

Figure 10. Driver's Canopy Installation (Sheet 1 of 2).

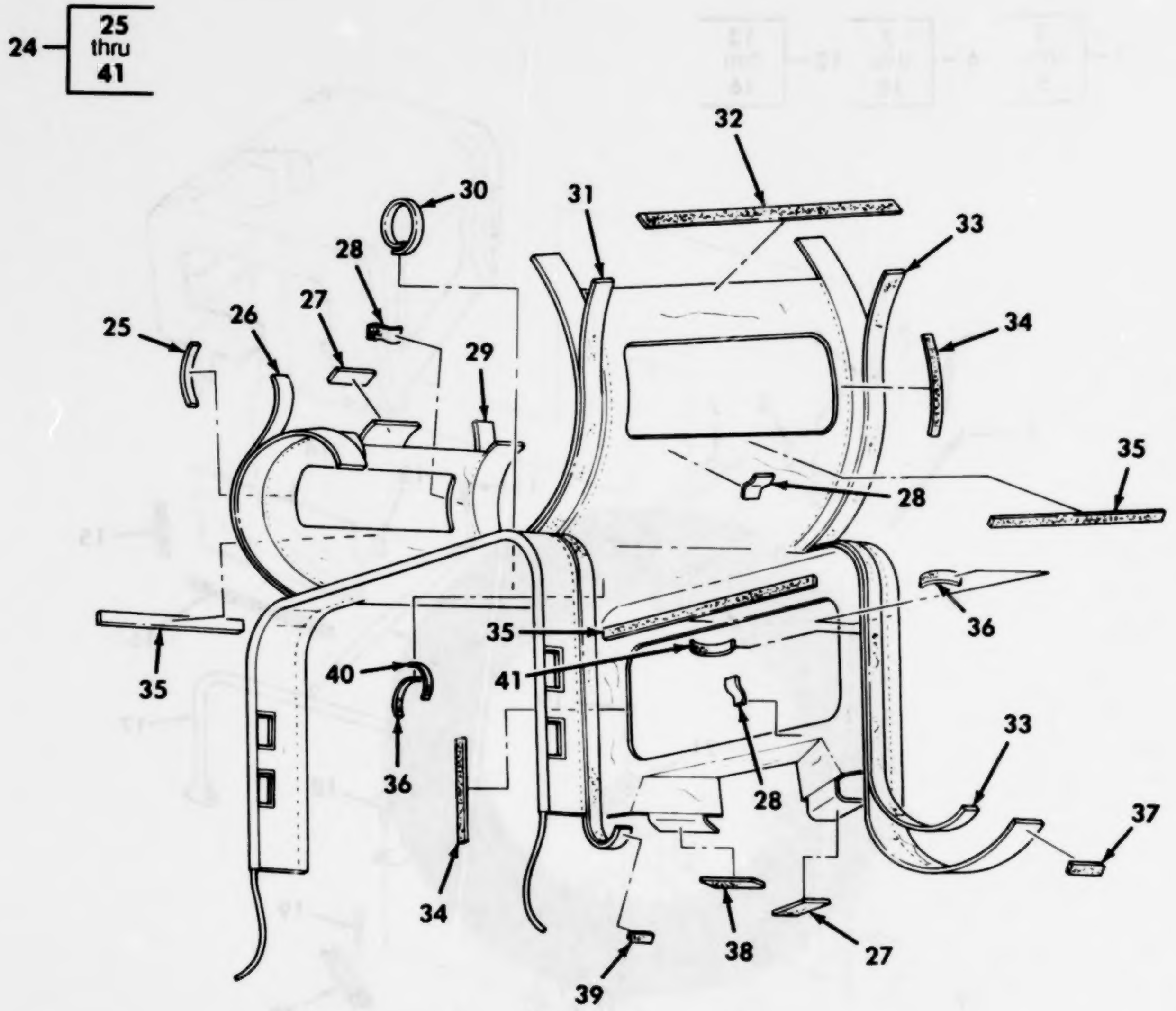

Figure 10. Driver's Canopy Installation (Sheet 2 of 2).

GROUP AG: WINDSHIELD AND CANOPY INSTALLATION

FIG. 10 DRIVERS CANOPY INSTALLATION

(1) ITEM NO	(2) SMR CODE	(3) CAGEC	(4) PART NUMBER	(5) DESCRIPTION AND USABLE ON CODES(UOC)	(6) QTY
1	AFFFF	19207	12331969	WINDOW, VEHICULAR	1
2	MFFZZ	19207	12331918-1	.TAPE, HOOK MAKE FROM HOOK TAPE, P/N 6-1-5876	2
3	MFFZZ	19207	12331919-3	.TAPE, HOOK MAKE FROM HOOK TAPE, P/N 6-1-5876	2
4	MFFZZ	19207	12331932-1	.WINDOW MAKE FROM PLASTIC SHEET, P/N PLEXIGLAS GM	1
5	MFFZZ	19207	12331924-6	.TAPE PILE MAKE FROM PILE TAPE, P/N 5-4-1695-4	6
6	AFFFF	19207	12335057	WINDOW, VEHICULAR	1
7	MFFZZ	19207	12331918-1	.TAPE, HOOK MAKE FROM HOOK TAPE, P/N 6-1-5876	2
8	MFFZZ	19207	12331919-4	.TAPE, HOOK MAKE FROM HOOK TAPE, P/N 6-1-5876	2
9	MFFZZ	19207	12331924-6	.TAPE, PILE MAKE FROM PILE TAPE, P/N 5-4-1695-4	6
10	MFFZZ	19207	12331932-3	.WINDOW MAKE FROM PLASTIC SHEET, P/N PLEXIGLAS GM	1
11	PAOZZ	96906	MS51850-66	SCREW, TAPPING, THREA	1
12	AFFFF	19207	12362132	WINDOW, VEHICULAR	1
13	MFFZZ	19207	12331924-6	.TAPE, PILE MAKE FROM PILE, TAPE, P/N 5-4-1695-4	6
14	MFFZZ	19207	12331932-4	.WINDOW MAKE FROM PLASTIC SHEET, P/N PLEXIGLAS GM	1
15	MFFZZ	19207	12331919-5	.TAPE, HOOK MAKE FROM HOOK TAPE, P/N 6-1-5876	2
16	MFFZZ	19207	12331918-2	.TAPE, HOOK MAKE FROM HOOK TAPE, P/N 6-1-5876	2
17	PFOZZ	19207	12362126	SUPPORT, CANOPY	1
18	PAOZZ	96906	MS21316-56	THUMBSCREW	2
19	PAOZZ	96906	MS51850-64	SCREW, TAPPING, THREA	11
20	PAOZZ	19207	12362137	STRIP, CHANNEL	1
21	PAOZZ	19207	12362136	STRIP, CHANNEL	2
22	PAOZZ	19207	12331973	STRIP, CHANNEL	1
23	PAOZZ	97403	13211E9579	SUPPORT, CANOPY	1
24	PFOFF	19207	12362119	COVER, CANOPY	1
25	MFFZZ	19207	12331924-5	.TAPE, PILE MAKE FROM PILE TAPE, P/N 5-4-1695-4	2
26	MFFZZ	19207	12331923-13	.TAPE, HOOK MAKE FROM HOOK TAPE, P/N 065	1
27	MFFZZ	19207	12331923-16	.TAPE, HOOK MAKE FROM HOOK TAPE, P/N 065	1
28	MFFZZ	19207	12331923-1	.TAPE, HOOK MAKE FROM HOOK TAPE, P/N 065	18
29	MFFZZ	19207	12331923-14	.TAPE, HOOK MAKE FROM HOOK TAPE, P/N 065	1
30	MFFZZ	19207	12331924-4	.TAPE, PILE MAKE FROM PILE TAPE, P/N 5-4-1695-4	1

(1) ITEM NO	(2) SMR CODE	(3) CAGEC	(4) PART NUMBER	(5) DESCRIPTION AND USABLE ON CODES(UOC)	(6) QTY
31	MFFZZ	19207	12331923-2	.TAPE,HOOK MAKE FROM HOOK TAPE,P/N 065.	1
32	MFFZZ	19207	12331923-4	.TAPE,HOOK MAKE FROM HOOK TAPE,P/N 065.	1
33	MFFZZ	19207	12331923-3	.TAPE,HOOK MAKE FROM HOOK TAPE,P/N 065.	1
34	MFFZZ	19207	12331924-2	.TAPE,PILE MAKE FROM PILE TAPE,P/N 5-4-1695-4.	4
35	MFFZZ	19207	12331924-1	.TAPE,PILE MAKE FROM PILE TAPE,P/N 5-4-1695-4.	4
36	MFFZZ	19207	12331924-3	.TAPE,PILE MAKE FROM PILE TAPE,P/N 5-4-1695-4.	2
37	MFFZZ	19207	12331923-7	.TAPE,HOOK MAKE FROM HOOK TAPE,P/N 065.	1
38	MFFZZ	19207	12331923-15	.TAPE,HOOK MAKE FROM HOOK TAPE,P/N 065.	1
39	MFFZZ	19207	12331923-6	.TAPE,HOOK MAKE FROM HOOK TAPE,P/N 065.	1
40	MFFZZ	19207	12331919-1	.TAPE,HOOK MAKE FROM HOOK TAPE,P/N 6-1-5876.	1
41	MFFZZ	19207	12331919-2	.TAPE,HOOK MAKE FROM HOOK TAPE,P/N 6-1-5876.	2

END OF FIGURE

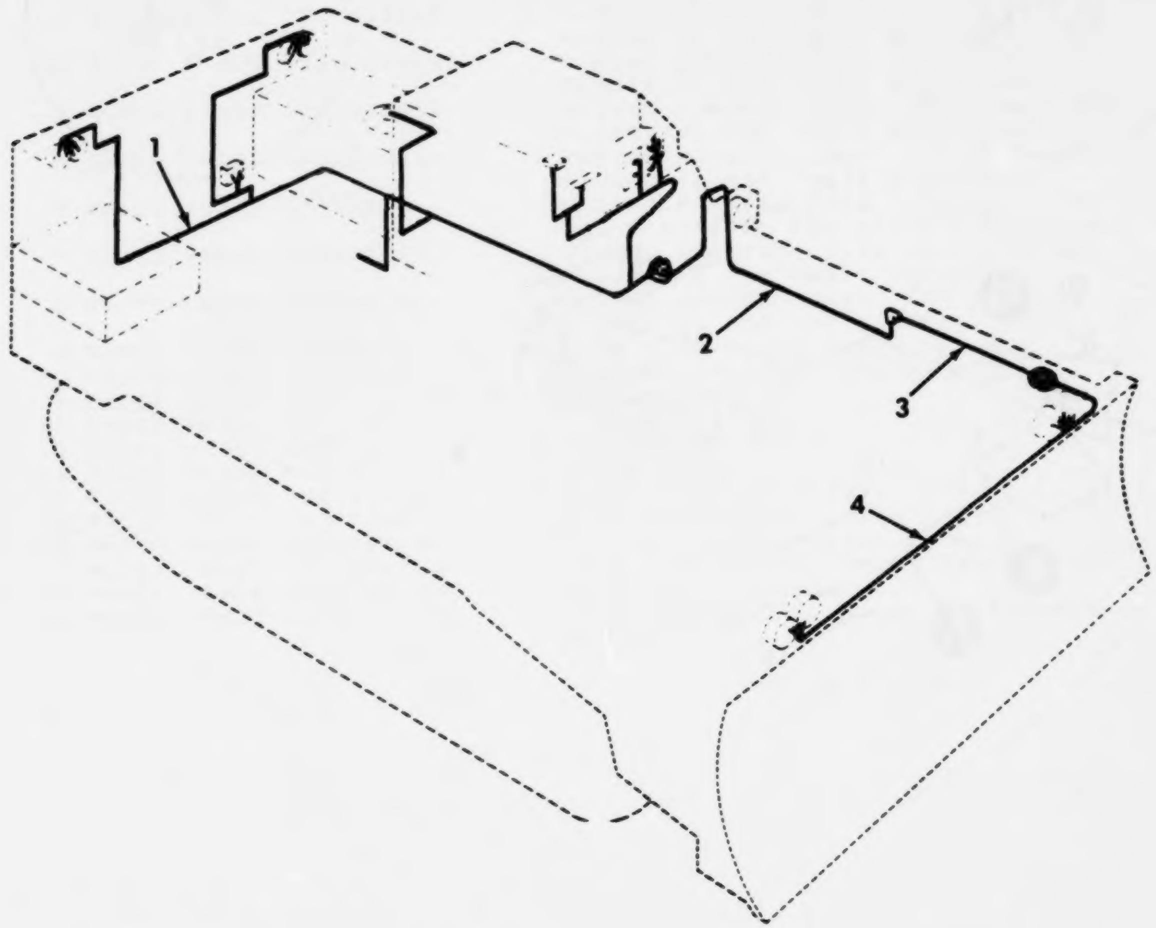

Figure 11. Wiring Harness and Electrical Lead Installation (Sheet 1 of 2).

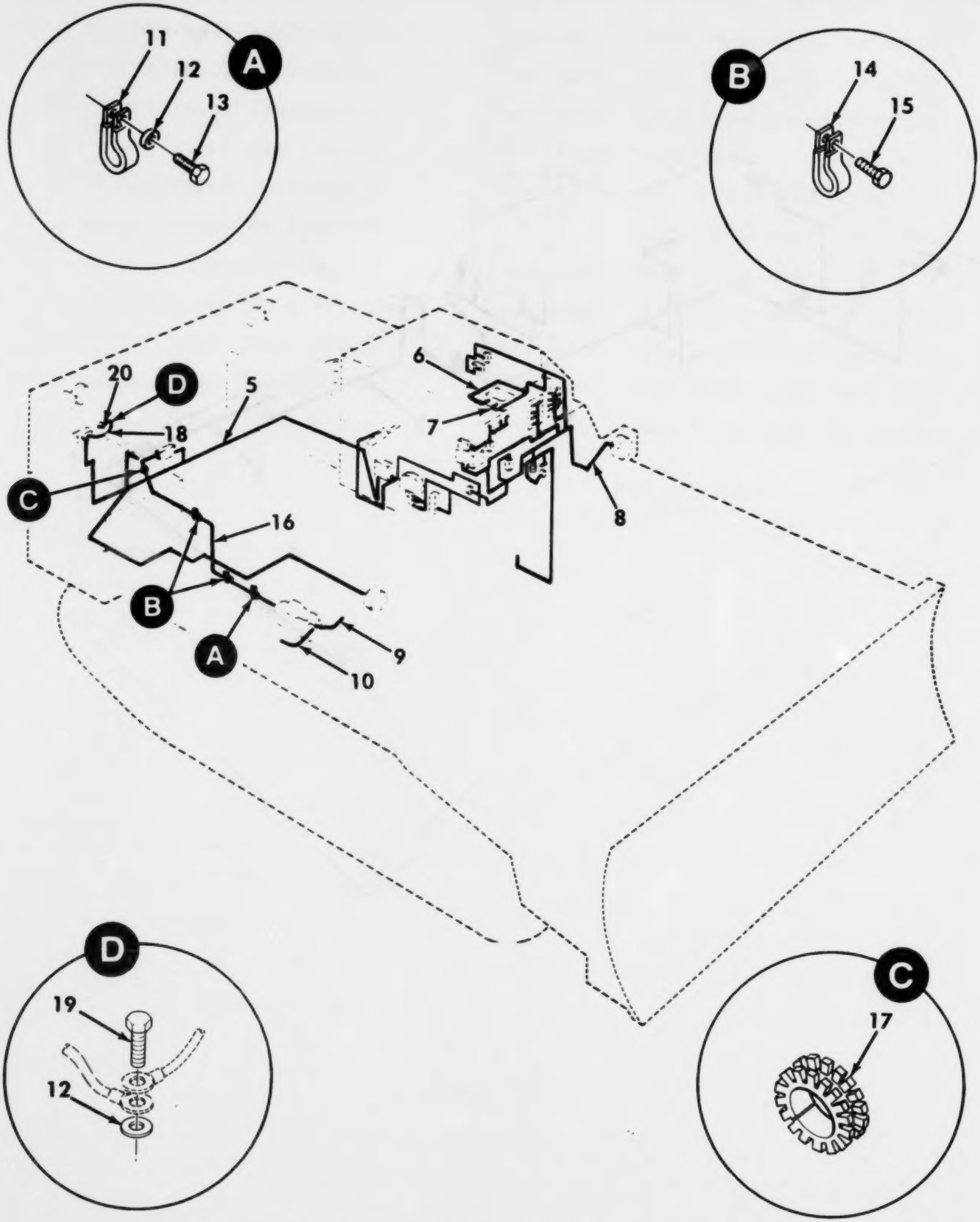

Figure 11. Wiring Harness and Electrical Lead Installation (Sheet 2 of 2).

(1) ITEM NO	(2) SMR CODE	(3) CAGEC	(4) PART NUMBER	(5) DESCRIPTION AND USABLE ON CODES(UOC)	(6) QTY
				GROUP AJ: ELECTRICAL INSTALLATION FIG.11 WIRING HARNESS AND ELECTRICAL LEAD INSTALLATION	
1	PAFFF	19207	12369102	WIRING HARNESS,BRAN REAR,SEE FIGURE 18 FOR PARTS BREAKDOWN.......	1
2	PAFFF	97403	13214E2267	WIRING HARNESS,BRAN HULL,SEE FIGURE 40 FOR PARTS BREAKDOWN.......	1
3	PAFFF	97403	13214E2064	WIRING HARNESS,BRAN APRON,SEE FIGURE 41 FOR PARTS BREAKDOWN.......	1
4	PAFFF	97403	13211E9059	WIRING HARNESS,BRAN HEADLIGHT,SEE FIGURE 42 FOR PARTS BREAKDOWN.......	1
5	PAFFF	19207	12355285	WIRING HARNESS,BRAN BATTERY,SEE FIGURE 12 FOR PARTS BREAKDOWN.......	1
6	PAOOO	19207	12357204	WIRING HARNESS,BRAN LOW VENT FAN, SEE FIGURE 22 FOR PARTS BREAKDOWN...	1
7	PAOOO	19207	12357205	WIRING HARNESS HIGH VENT FAN,SEE FIGURE 22 FOR PARTS BREAKDOWN.......	1
8	PAFFF	19207	12357211	WIRING HARNESS,BRAN CONTROL,SEE FIGURE 21 FOR PARTS BREAKDOWN.......	1
9	PAOZZ	19207	12335448	LEAD,ELECTRICAL HULL GROUND.........	1
10	PAOZZ	19207	12335449	LEAD,ELECTRICAL ENGINE GROUND.......	1
11	PAOZZ	96906	MS21333-125	CLAMP,LOOP..........................	1
12	PAOZZ	96906	MS27183-14	WASHER,FLAT.........................	2
13	PAOZZ	96906	MS90728-57L	BOLT,SELF-LOCKING...................	1
14	PAOZZ	96906	MS21333-75	CLAMP,LOOP..........................	2
15	PAOZZ	96906	MS51850-65	SCREW,TAPPING,THREA.................	2
16	PAFZZ	19207	12335450	LEAD,ELECTRICAL STARTER............	1
17	PAFZZ	96906	MS21266-5N	GROMMET,NONMETALLIC.................	1
18	PAOZZ	19207	12335447-4	LEAD,ELECTRICAL SHUNT,GROUND........	1
19	PAOZZ	96906	MS90728-58L	BOLT,SELF-LOCKING...................	1
20	PAOZZ	19207	12335447-5	LEAD,ELECTRICAL SLAVE RECEPTACLE GROUND.............................	1

END OF FIGURE

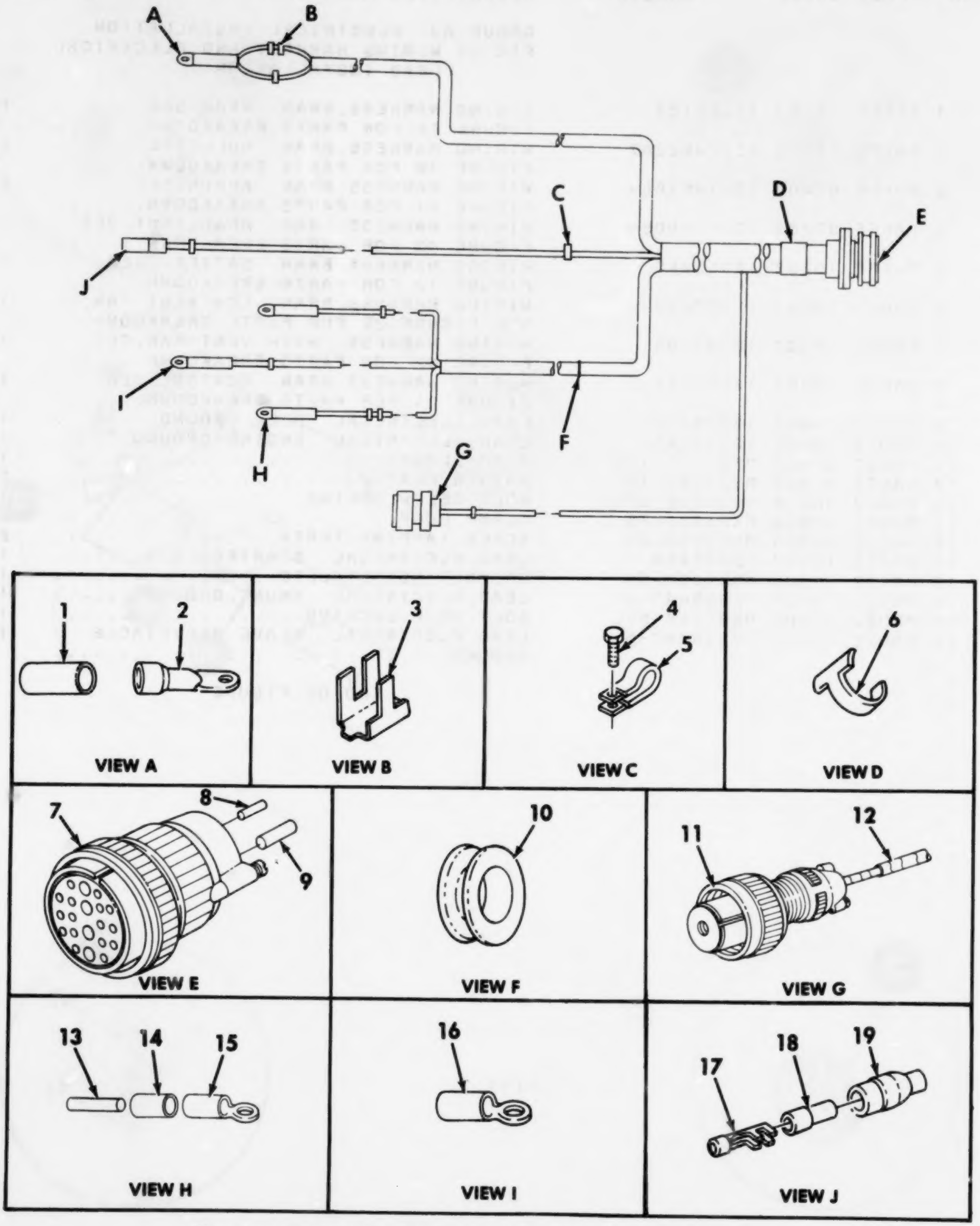

Figure 12. Battery Wiring Harness, 12355285, and Mounting Hardware.

(1) ITEM NO	(2) SMR CODE	(3) CAGEC	(4) PART NUMBER	(5) DESCRIPTION AND USABLE ON CODES(UOC)	(6) QTY
				GROUP AJ: ELECTRICAL INSTALLATION FIG.12 BATTERY WIRING HARNESS, 12355285, AND MOUNTING HARDWARE	
1	MOOZZ	81349	M23053/1-102-0AR	INSULATION SLEEVING MAKE FROM INSULATION SLEEVING,P/N M23053/1-102-0	V
2	PAOZZ	96906	MS25036-114	TERMINAL,LUG	1
3	PAOZZ	81349	M43436/3-1	BAND,MARKER	18
4	PAFZZ	96906	MS51850-65	SCREW,TAPPING,THREA	11
5	PAFZZ	96906	MS21333-65	CLAMP,LOOP	11
6	PAOZZ	81349	M43436/1-3	BAND,MARKER	1
7	PAFZZ	96906	MS3456W28-11S	CONNECTOR,PLUG,ELEC	1
8	MFFZZ	19207	8724763AR	NONMETALLIC ROD MAKE FROM NONMETALLIC ROD,P/N 8724763	V
9	MFFZZ	19207	8724762AR	NONMETALLIC ROD MAKE FROM NONMETALLIC ROD,P/N 8724762	V
10	PAOZZ	96906	MS35489-112X	GROMMET,NONMETALLIC	2
11	PAOZA	96906	MS3456W12-5S	CONNECTOR,PLUG,ELEC	1
12	MOOZZ	81349	M13486/1-5AR	WIRE,ELECTRICAL MAKE FROM ELECTRICAL WIRE,P/N M13486/1-5	V
13	MOOZZ	81349	M13486/1-3AR	WIRE,ELECTRICAL MAKE FROM ELECTRICAL WIRE,P/N M13486/1-3	V
14	MOOZZ	81349	M23053/1-101-0AR	INSULATION SLEEVING MAKE FROM INSULATION SLEEVING,P/N M23053/1-101-0	V
15	PAOZZ	19207	7728777	TERMINAL,LUG	2
16	PAOZZ	19207	7728780	TERMINAL,LUG	1
17	PAOZZ	19207	8338564	TERMINAL ASSEMBLY	1
18	PAOZZ	19207	8338562	INSULATOR,BUSHING	1
19	PAOZZ	19207	8338561	SHELL,ELECTRICAL CO	1

END OF FIGURE

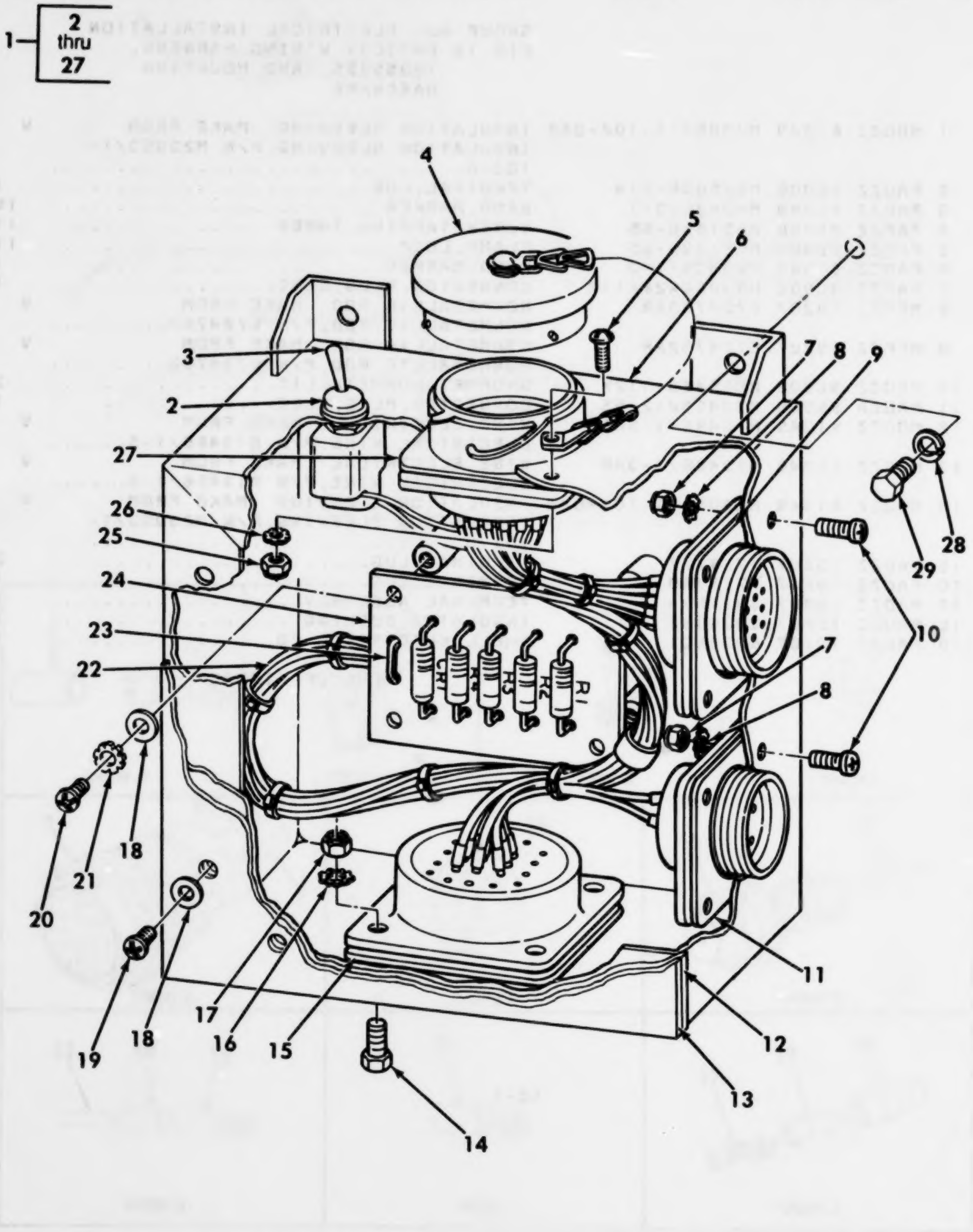

Figure 13. STE/ICE Resistor Box and Mounting Parts.

(1) ITEM NO	(2) SMR CODE	(3) CAGEC	(4) PART NUMBER	(5) DESCRIPTION AND USABLE ON CODES(UDC)	(6) QTY
				GROUP AJ: ELECTRICAL INSTALLATION FIG.13 STE/ICE RESISTOR BOX AND MOUNTING PARTS	
1	PBOFF	19207	12367617	RESISTOR BOX,INTERF..................	1
2	PAFZZ	81349	M5423/16-01	.BOOT,DUST AND MOIST.................	1
3	PAFZZ	96906	MS24523-29	.SWITCH,TOGGLE.......................	1
4	PFFZZ	19207	12258943	.COVER,ELECTRICAL CO.................	1
5	PAFZZ	96906	MS35206-246	.SCREW,MACHINE.......................	4
6	XAFZZ	19207	12367614	.JUNCTION BOX,ELECTR.................	1
7	PAFZZ	96906	MS21083N04	.NUT,SELF-LOCKING,HE.................	8
8	PAFZZ	96906	MS35335-29	.WASHER,LOCK.........................	8
9	PAFZZ	96906	MS52000-8	.GASKET..............................	1
10	PAFZZ	96906	MS35206-217	.SCREW,MACHINE.......................	8
11	PAFZZ	96906	MS52000-7	.GASKET..............................	1
12	PAFZZ	19207	12367616	.GASKET..............................	1
13	PAFZZ	19207	12367615	.COVER...............................	1
14	PAFZZ	96906	MS35206-231	.SCREW,MACHINE.......................	4
15	PAFZZ	96906	MS52000-10	.GASKET..............................	1
16	PAFZZ	96906	MS35335-30	.WASHER,LOCK.........................	4
17	PAFZZ	96906	MS21083N06	.NUT,SELF-LOCKING,HE.................	4
18	PAFZZ	96906	MS27183-42	.WASHER,FLAT.........................	12
19	PAFZZ	96906	MS35206-264	.SCREW,MACHINE.......................	8
20	PAFZZ	96906	MS35206-262	.SCREW,MACHINE.......................	4
21	PAFZZ	96906	MS35335-32	.WASHER,LOCK.........................	4
22	PFFFF	19207	12355487	.WIRING HARNESS,BRAN RESISTOR BOX SEE FIG 14 FOR PARTS BREAKDOWN......	1
23	PAFZZ	96906	MS3367-1-9	.STRAP,TIEDOWN,ELECT.................	1
24	PAFZZ	19207	12355577	.CIRCUIT CARD ASSEMB.................	1
25	PAFZZ	96906	MS21083N08	.NUT,SELF-LOCKING,HE.................	4
26	PAFZZ	96906	MS35335-31	.WASHER,LOCK.........................	4
27	PAFZZ	19207	12334687	.GASKET..............................	1
28	PAOZZ	02614	N405P41B6	WASHER,LOCK..........................	4
29	PAOZZ	96906	MS90728-3	SCREW,CAP,HEXAGON H..................	4

END OF FIGURE

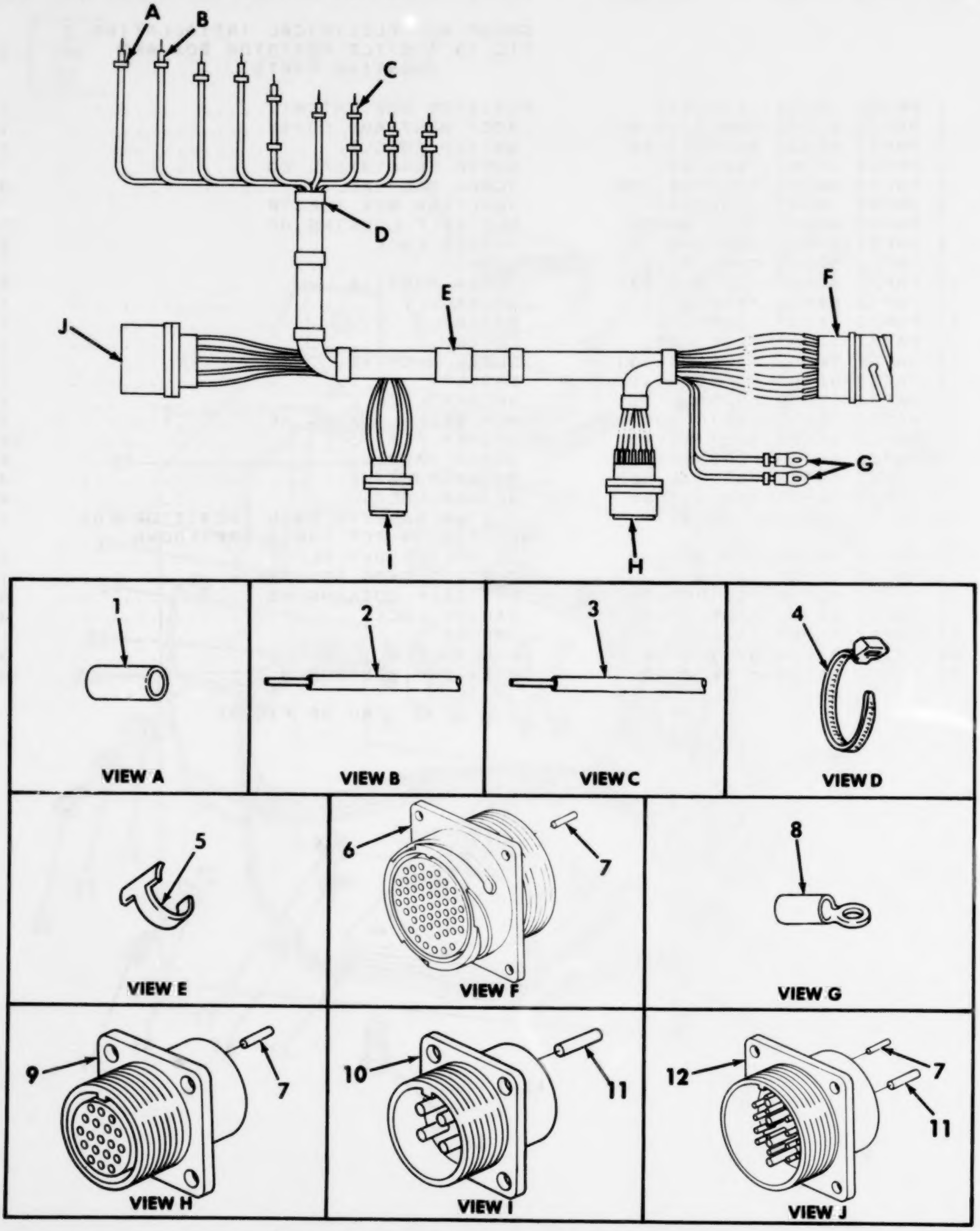

Figure 14. Resistor Box Wiring Harness – 12355487.

(1) ITEM NO	(2) SMR CODE	(3) CAGEC	(4) PART NUMBER	(5) DESCRIPTION AND USABLE ON CODES(UOC)	(6) QTY
				GROUP AJ: ELECTRICAL INSTALLATION FIG.14 RESISTOR BOX WIRING HARNESS-12355487	
1	MFFZZ	81349	M23053/5-103-9AR	INSULATION SLEEVING MAKE FROM INSUIATION SLEEVING,P/N M23053/5-103-9	V
2	MFFZZ	82577	M22759/18-20-9AR	WIRE,ELECTRICAL MAKE FROM ELECTRICAL WIRE,P/N M22759/18-20-9	V
3	MFFZZ	81349	M22759/18-16-9AR	WIRE,ELECTRICAL MAKE FROM ELECTRICAL WIRE,P/N M22759/18-16-9	V
4	PAFZZ	96906	MS3367-1-9	STRAP,TIEDOWN,ELECT	V
5	PAFZZ	81349	M43436/1-3	BAND,MARKER	1
6	PAFZZ	71468	CA3100R32A10S-BO 5F80	CONNECTOR,RECEPTACL	1
7	MFFZZ	19207	8724762AR	ROD MAKE FROM NONMETALLIC ROD,P/N 8724762	V
8	PAFZZ	96906	MS20659-101	TERMINAL,LUG	2
9	PAFZZ	96906	MS3452W22-14S	CONNECTOR,RECEPTACL	1
10	PAFZZ	96906	MS3452W20-4P	CONNECTOR,RECEPTACL	1
11	MFFZZ	19207	8724764AR	ROD MAKE FROM NONMETALLIC ROD,P/N 8724764	V
12	PAFZZ	96906	MS3452W28-11P	CONNECTOR,RECEPTACL	1

END OF FIGURE

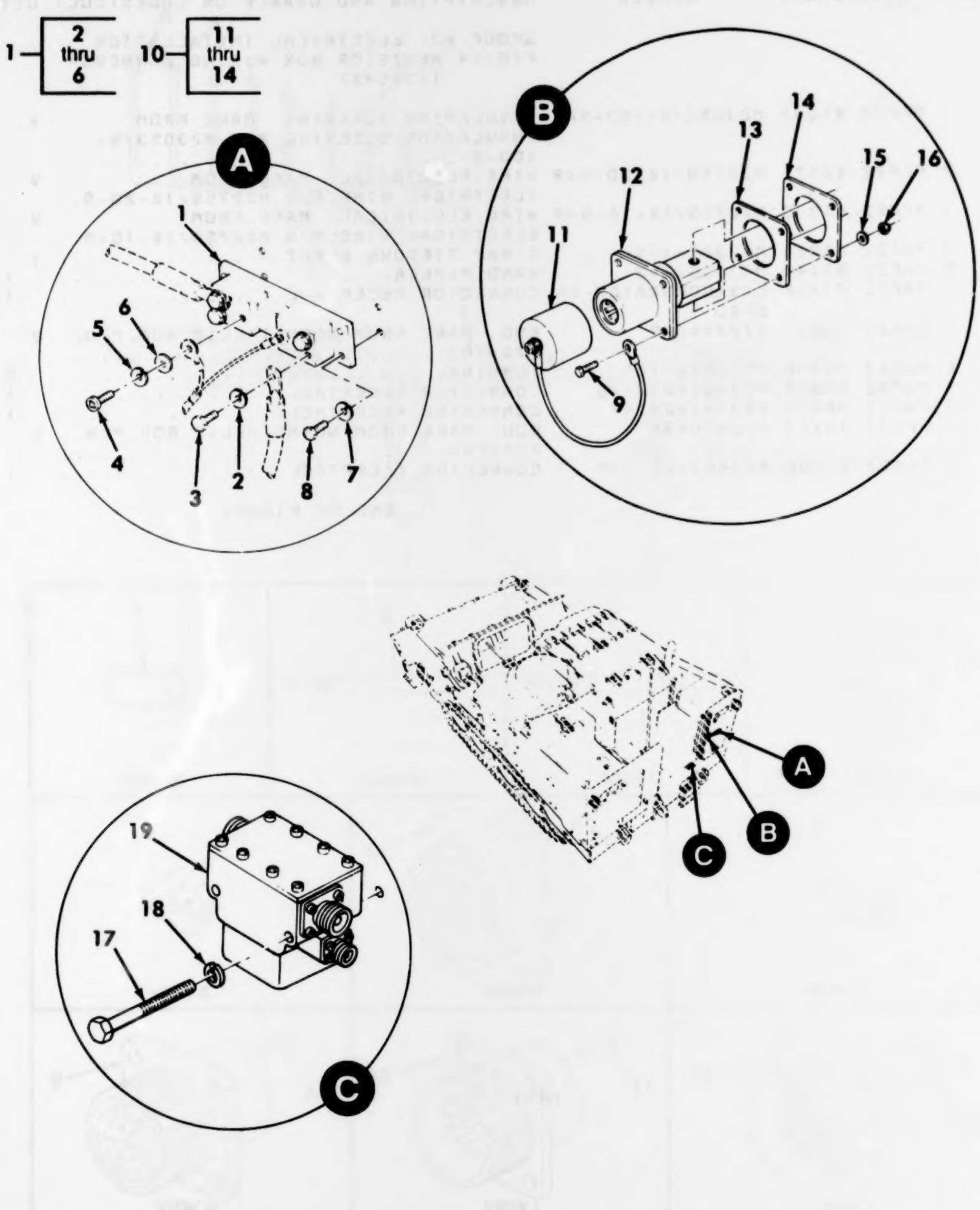

Figure 15. Master Relay, Slave Receptacle, STE/ICE Shunt, and Mounting Hardware.

(1) ITEM NO	(2) SMR CODE	(3) CAGEC	(4) PART NUMBER	(5) DESCRIPTION AND USABLE ON CODES(UOC)	(6) QTY
				GROUP AJ: ELECTRICAL INSTALLATION FIG. 15 MASTER RELAY, SLAVE RECEPTACLE, STE/ICE SHUNT, AND MOUNTING HARDWARE	
1	PAOZZ	19207	12258937-2	SHUNT, INSTRUMENT......................	1
2	PAOZZ	96096	MS35338-103	.WASHER, LOCK......................	4
3	PAOZZ	96906	MS35309-359	.SCREW, CAP, HEXAGON H.................	4
4	PAOZZ	96906	MS35215-53	.SCREW...........................	2
5	PAOZZ	96906	MS35338-100	.WASHER, LOCK......................	2
6	PAOZZ	96906	MS15795-908	.WASHER, FLAT......................	2
7	PAOZZ	02614	N405P41B6	WASHER, LOCK.......................	4
8	PAOZZ	96906	MS90728-8	SCREW, CAP, HEXAGON H..................	4
9	PAOZZ	96906	MS35207-267	SCREW, MACHINE.....................	4
10	PAOOO	19207	11674728	CONNECTOR, RECEPTACL SLAVE...........	1
11	PAOZZ	19207	11675004	.CAP, PROTECTIVE, DUST................	1
12	PAOZZ	19207	11682345	.CONNECTOR, RECEPTACL................	1
13	PAOZZ	19207	11674729	.GASKET..........................	1
14	PAOZZ	19207	11674730	.INSULATOR, PLATE....................	1
15	PAOZZ	96906	MS27183-42	.WASHER, FLAT......................	4
16	PAOZZ	96906	MS21083N3	.NUT, SELF-LOCKING, HE................	4
17	PAOZZ	96906	MS90728-48	SCREW, CAP, HEXAGON H.................	2
18	PAOZZ	96906	MS35338-45	WASHER, LOCK.......................	2
19	PAOZZ	19207	10894806	RELAY AND HOUSING A..................	1

END OF FIGURE

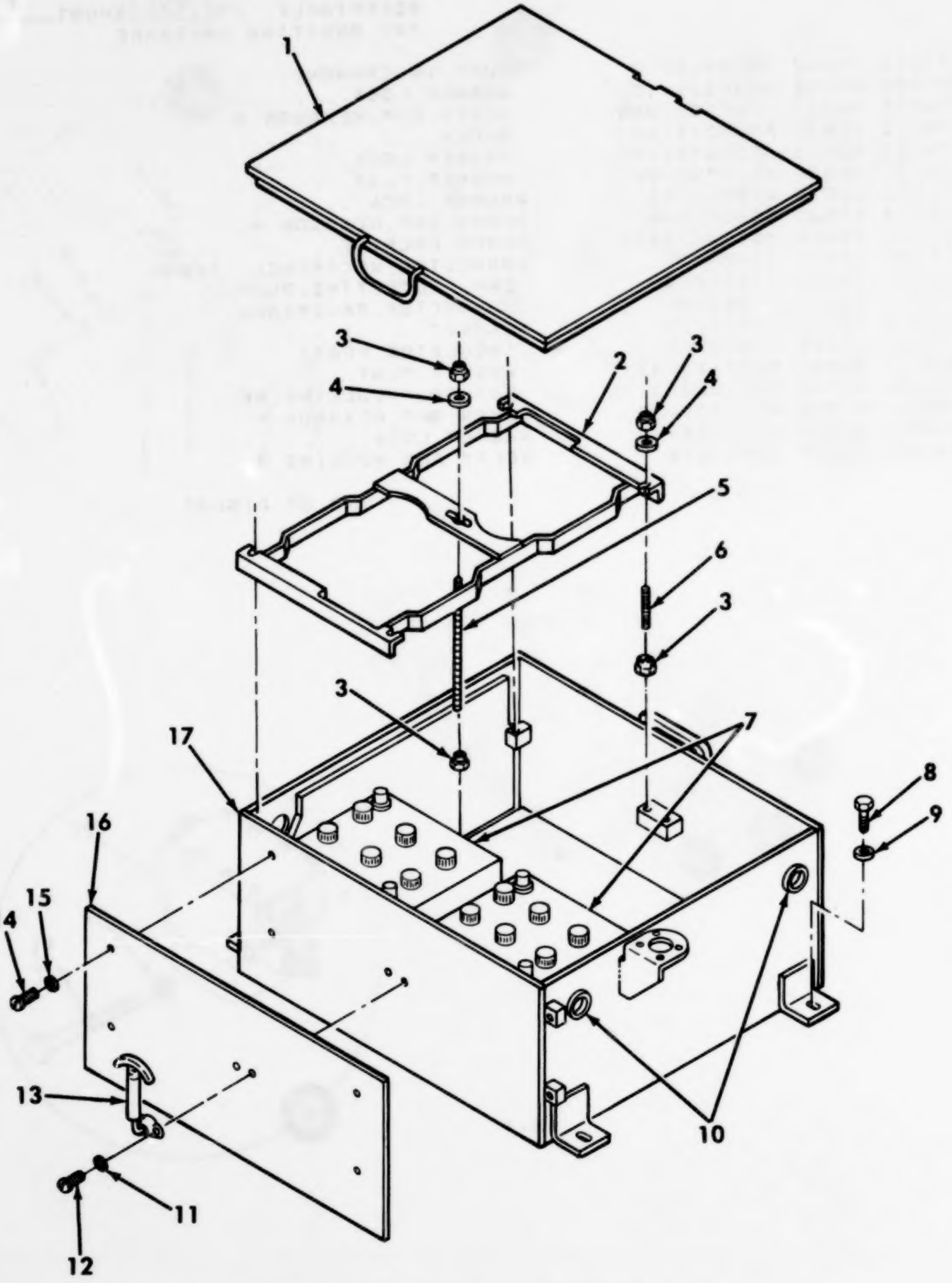

Figure 16. Batteries, Box, and Related Parts.

(1) ITEM NO	(2) SMR CODE	(3) CAGEC	(4) PART NUMBER	(5) DESCRIPTION AND USABLE ON CODES(UOC)	(6) QTY
				GROUP AJ: ELECTRICAL INSTALLATION FIG.16 BATTERIES, BOX, AND RELATED PARTS	
1	PAOZZ	19207	12332466	COVER,BATTERY	1
2	PFOZZ	96906	MS53046-3	RETAINER,BATTERY	2
3	PAOZZ	96906	MS51922-17	NUT,SELF-LOCKING,HE	20
4	PAOZZ	96906	MS27183-15	WASHER,FLAT	10
5	PAOZZ	19207	12334679-2	STUD,PLAIN	2
6	PAOZZ	19207	12334679-1	STUD,PLAIN	8
7	PAOFA	96906	MS52149-1	BATTERY,STORAGE	4
8	PAOZZ	96906	MS90728-64L	BOLT,SELF-LOCKING	4
9	PAOZZ	96906	MS27183-14	WASHER,FLAT	4
10	PAOZZ	96906	MS35489-85X	GROMMET,NONMETALLIC	2
11	PAOZZ	96906	MS27183-10	WASHER,FLAT	2
12	PAOZZ	96906	MS90728-9L	BOLT,SELF-LOCKING	2
13	PAOZZ	19207	7539197	FASTENER,CYLINDER,S	1
14	PAOZZ	96906	MS90728-109L	BOLT,SELF-LOCKING	4
15	PAOZZ	96906	MS27183-18	WASHER,FLAT	4
16	PBOZZ	19207	12331834	ARMOR PLATE	1
17	PBOZZ	19207	12355316	BATTERY,BOX	1

END OF FIGURE

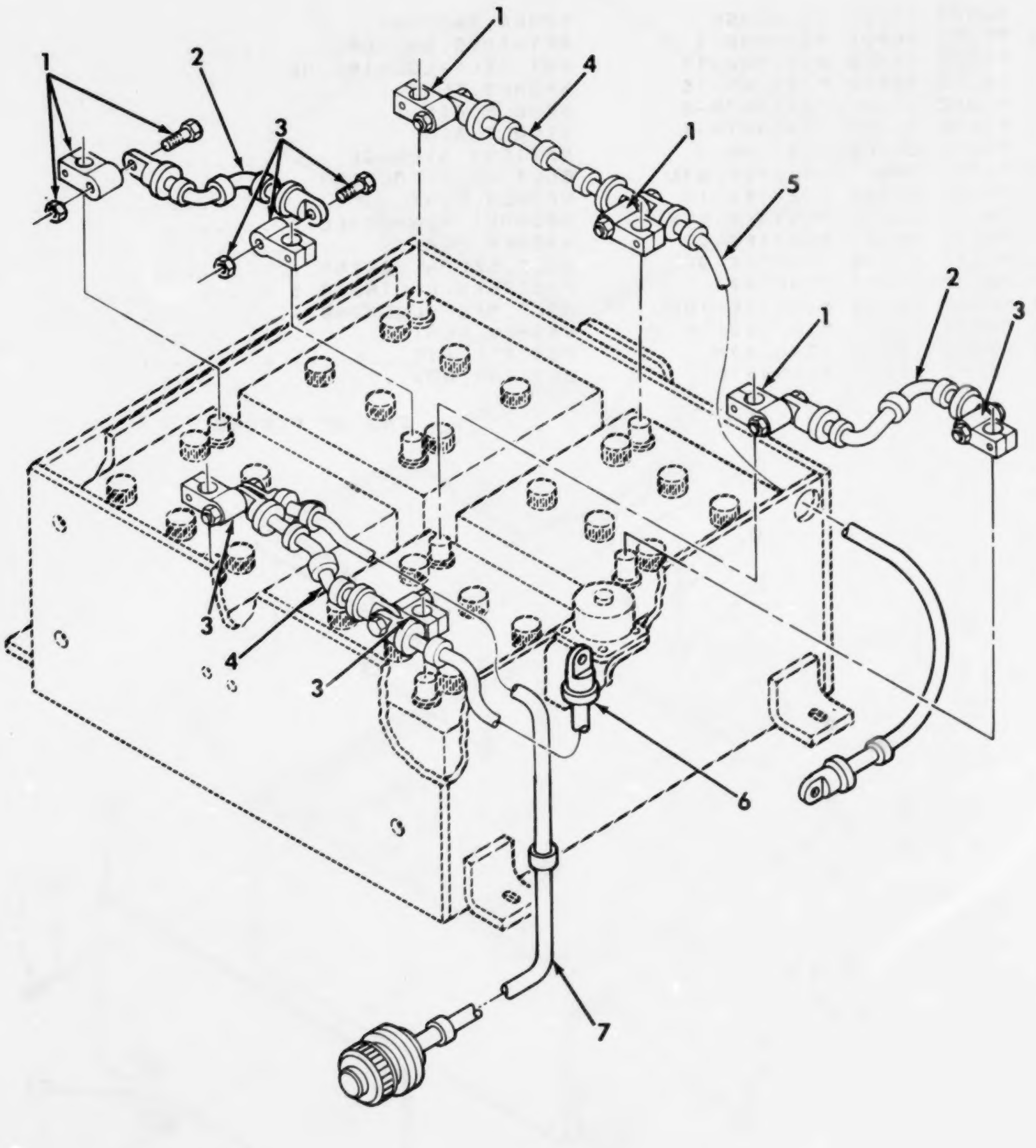

Figure 17. Battery Leads and Terminals.

(1) ITEM NO	(2) SMR CODE	(3) CAGEC	(4) PART NUMBER	(5) DESCRIPTION AND USABLE ON CODES(UOC)	(6) QTY
				GROUP AJ: ELECTRICAL INSTALLATION FIG.17 BATTERY LEADS AND TERMINALS	
1	PAOZZ	96906	MS75004-2	TERMINAL,LUG NEGATIVE..............	4
2	PAOZZ	19207	12335447-3	LEAD,ELECTRICAL BATTERY INTERCONNECT.........................	2
3	PAOZZ	96906	MS75004-1	TERMINAL,LUG POSITIVE..............	4
4	PAOZZ	19207	12335447-1	LEAD,ELECTRICAL BATTERY INTERCONNECT.........................	2
5	PAOZZ	19207	12335447-2	LEAD,ELECTRICAL BATTERY INTERCONNECT.........................	1
6	PAOZZ	19207	12335447-6	LEAD,ELECTRICAL BATTERY INTERCONNECT.........................	1
7	PAOZZ	19207	12335451	LEAD,ELECTRICAL BATTERY POSTIVE MASTER RELAY........................	1

END OF FIGURE

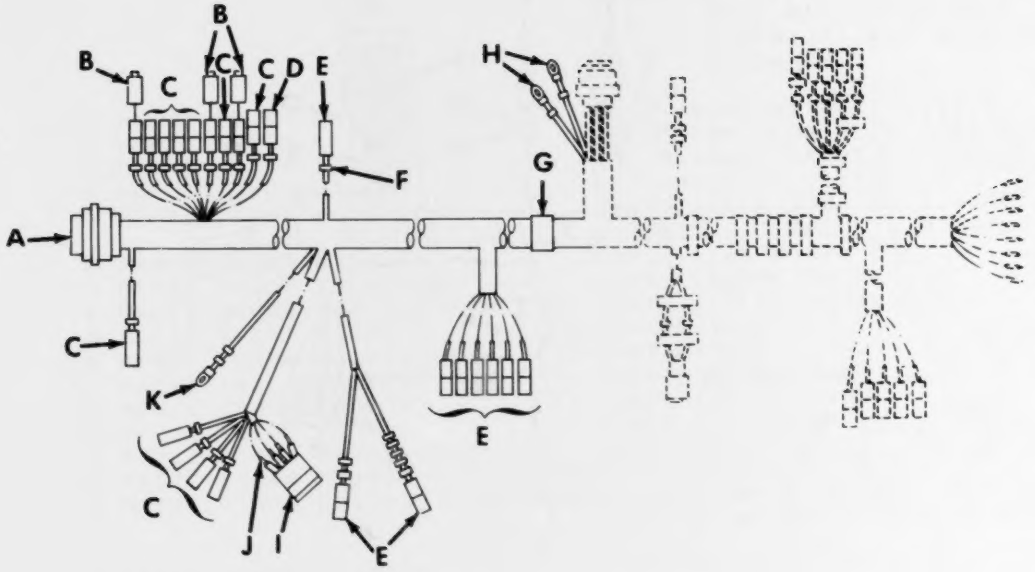

(Phantomed Parts Shown on Sheet 2 of 2)

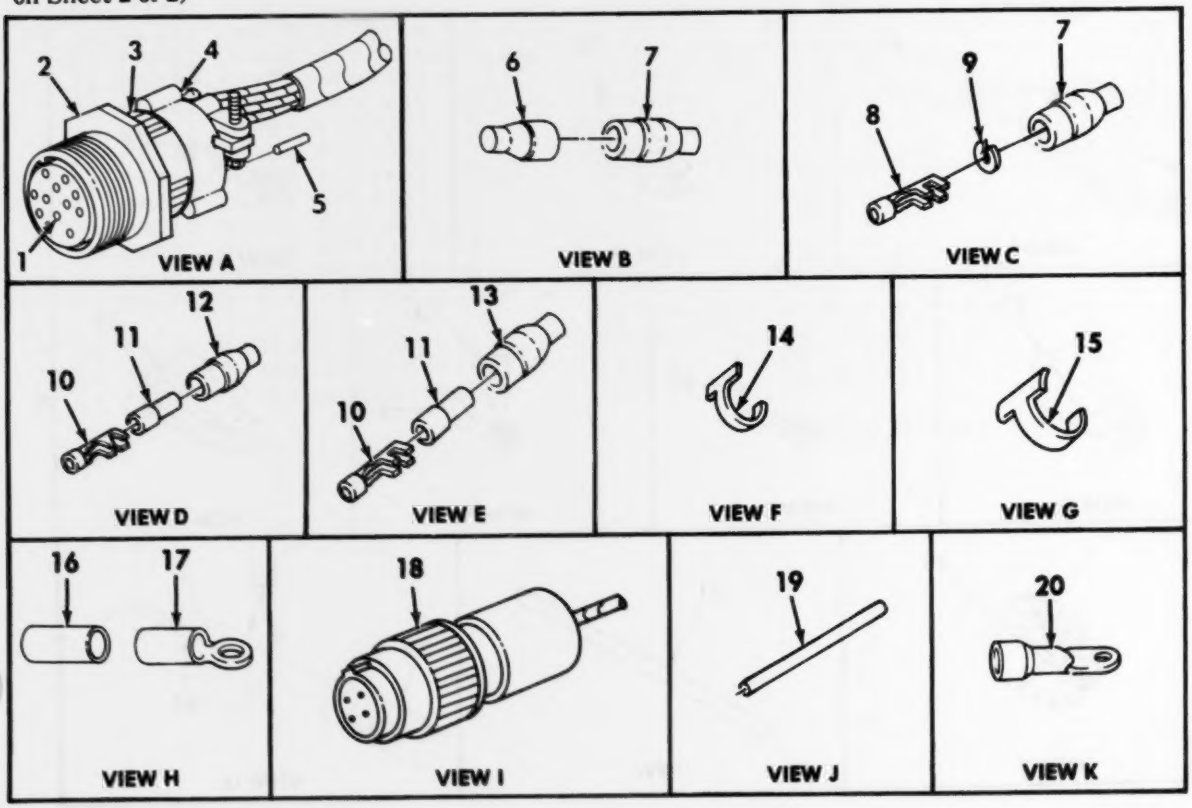

Figure 18. Rear Wiring Harness, 12369102, and Mounting Hardware (Sheet 1 of 2).

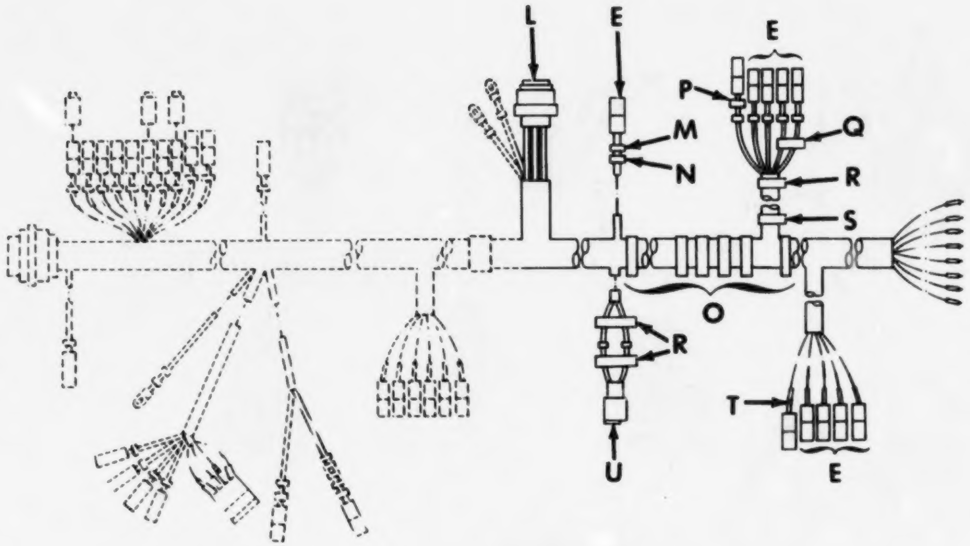

(Phantomed Parts Shown
on Sheet 1 of 2)

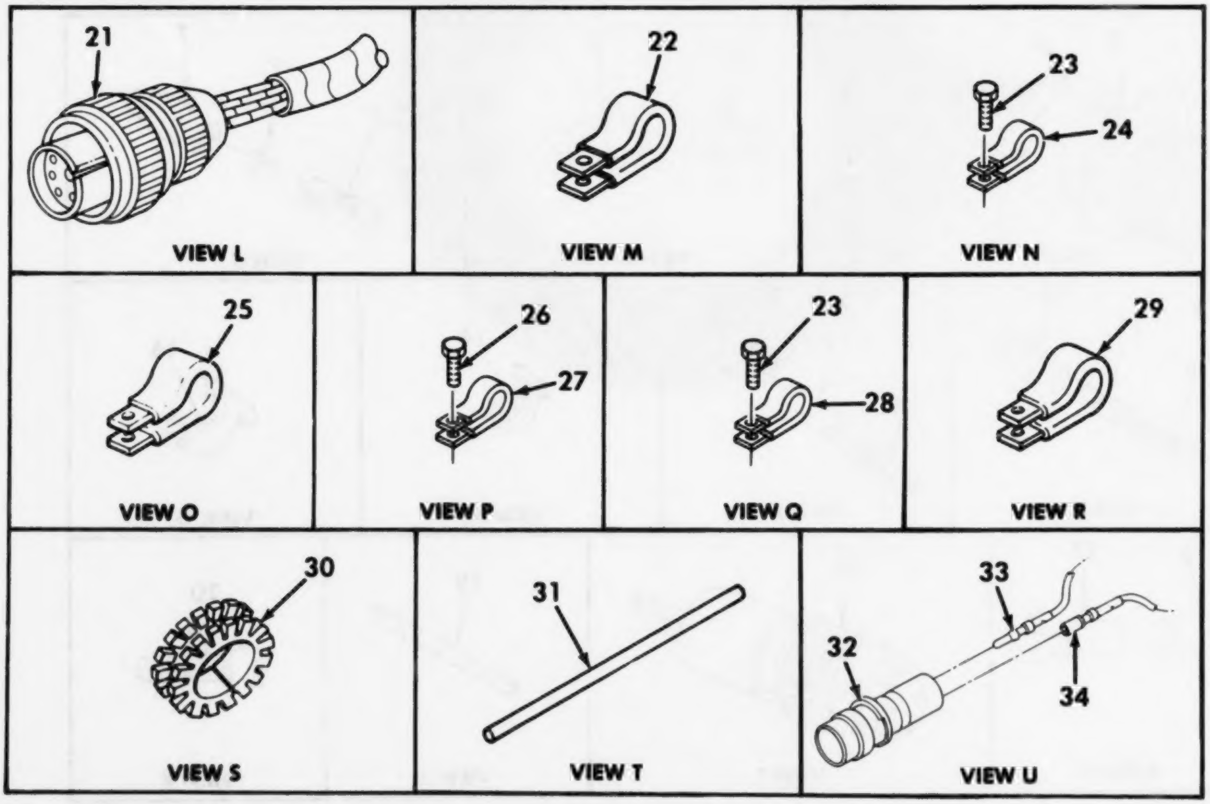

Figure 18. Rear Wiring Harness, 12369102, and Mounting Hardware (Sheet 2 of 2).

(1) ITEM NO	(2) SMR CODE	(3) CAGEC	(4) PART NUMBER	(5) DESCRIPTION AND USABLE ON CODES(UOC)	(6) QTY
				GROUP AJ: ELECTRICAL INSTALLATION FIG.18 REAR WIRING HARNESS, 12369102, AND MOUNTING HARDWARE	
1	PAFZZ	19207	7722333	BUSHING,NONMETALLIC	1
2	PAFZZ	19207	8724258	CONNECTOR,PLUG,ELEC	1
3	PAFZZ	19207	7723309	NUT,PLAIN,KNURLED	1
4	PAFZZ	19207	7716634	NUT,COUPLING,ELECTR	1
5	MFFZZ	19207	8724763AR	NONMETALLIC ROD MAKE FROM NONMETALLIC ROD,P/N 8724763	V
6	PAOZZ	19207	8338566	SHELL,ELECTRICAL CO	3
7	PFOZZ	19207	7982907	DUMMY CONNECTOR,PLU	3
8	PAOZZ	96906	MS27148-2	CONTACT,ELECTRICAL	8
9	PAOZZ	19207	8338567	WASHER,SLOTTED	8
10	PAOZZ	96906	MS27148-2	CONTACT	1
11	PAOZZ	19207	8338564	TERMINAL ASSEMBLY	27
12	PAOZZ	19207	8338562	INSULATOR,BUSHING	27
13	PAOZZ	19207	8338561	SHELL,ELECTRICAL CO	27
14	PAOZZ	81349	M43436/3-1	BAND,MARKER	79
15	PAOZZ	81349	M43436/1-3	BAND,MARKER	1
16	MOOZZ	81349	M23053/1-101-0AR	INSULATION SLEEVING MAKE FROM INSULATION SLEEVING,P/N M23053/1-101-0	V
17	PAOZZ	19207	7056708	TERMINAL,LUG	2
18	PAFZZ	96906	MS3456W14S2S	CONNECTOR,PLUG,ELEC	1
19	MOOZZ	81349	M13486/1-3AR	WIRE,ELECTRICAL MAKE FROM ELECTRICAL WIRE,P/N M13486/1-3	V
20	PAOZZ	19207	7728778	TERMINAL,LUG	1
21	PAFZZ	96906	MS3456W22-23S	CONNECTOR,PLUG,ELEC	1
22	PAOZZ	96906	MS21333-117	CLAMP,LOOP	1
23	PAOZZ	96906	MS51850-65	SCREW	15
24	PAOZZ	96906	MS21333-65	CLAMP,LOOP	2
25	PAOZZ	96906	MS21334-31	CLAMP,LOOP	8
26	PAOZZ	96906	MS51850-64	SCREW,TAPPING,THREA	1
27	PAOZZ	96906	MS21333-71	CLAMP,LOOP	1
28	PAOZZ	96906	MS21333-69	CLAMP,LOOP	7
29	PAOZZ	96906	MS21333-121	CLAMP,LOOP	4
30	PAOZZ	96906	MS35489-90	GROMMET,NONMETALLIC	2
31	MOOZZ	81349	M13486/1-5AR	WIRE,ELECTRICAL MAKE FROM ELECTRICAL WIRE,P/N M13486/1-5	V
32	PAFZZ	11083	7N9738	CONNECTOR BODY,PLUG	1
33	PAFZZ	71468	031-1267-001	CONTACT,ELECTRICAL	1
34	PAFZZ	71468	030-2196-001	PIN,GROOVED,HEADLES	1

END OF FIGURE

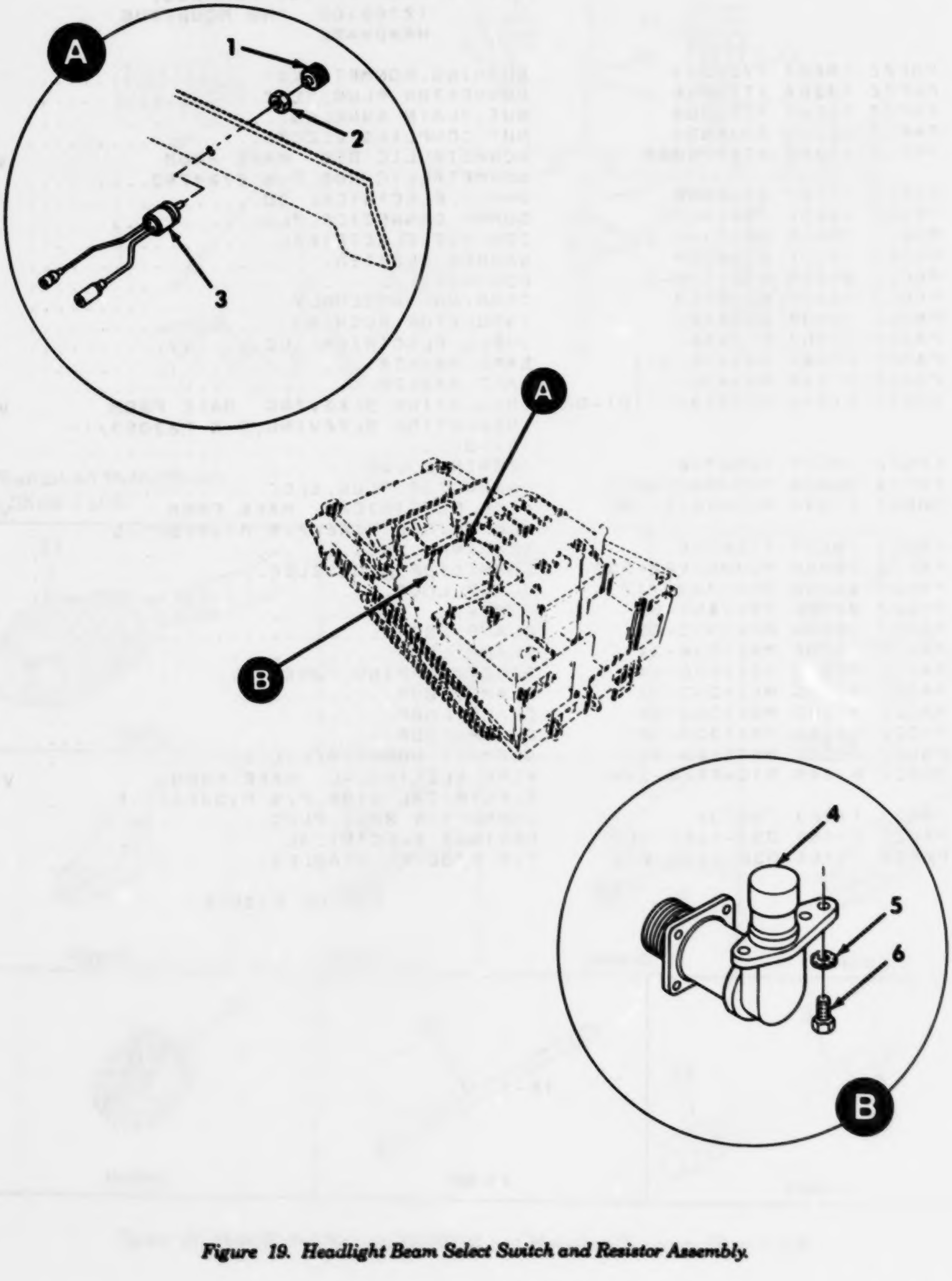

Figure 19. Headlight Beam Select Switch and Resistor Assembly.

(1) ITEM NO	(2) SMR CODE	(3) CAGEC	(4) PART NUMBER	(5) DESCRIPTION AND USABLE ON CODES(UOC)	(6) QTY
				GROUP AJ: ELECTRICAL INSTALLATION FIG.19 HEADLIGHT BEAM SELECT SWITCH AND RESISTOR ASSEMBLY	
1	PAOZZ	96906	MS91528-3D2B	KNOB....................................	1
2	PAOZZ	81349	M5423-09-02	BOOT,DUST AND MOIST.................	1
3	PAOZZ	19207	10893855	RESISTOR ASSEMBLY,V.................	1
4	PAOZZ	96906	MS53001-1	SWITCH,BEAM SELECTI.................	1
5	PAOZZ	02614	N405P41B6	WASHER,LOCK.........................	3
6	PAOZZ	96906	MS90725-6	SCREW,CAP,HEXAGON H.................	3

END OF FIGURE

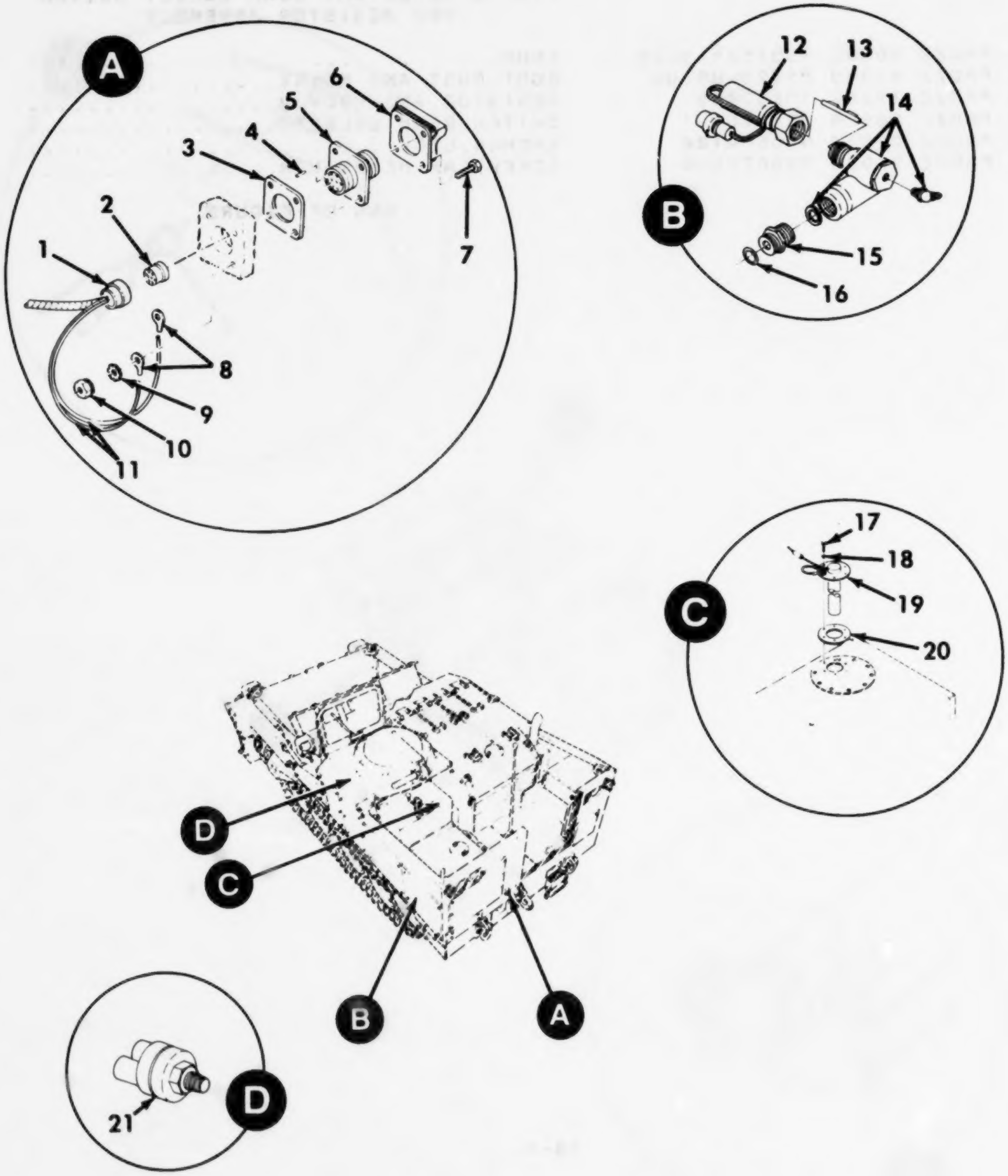

Figure 20. Trailer Receptacle, Stop Light Switch, and Sending Units.

(1) ITEM NO	(2) SMR CODE	(3) CAGEC	(4) PART NUMBER	(5) DESCRIPTION AND USABLE ON CODES(UOC)	(6) QTY
				GROUP AJ: ELECTRICAL INSTALLATION FIG.20 TRAILER RECEPTACLE, STOPLIGHT SWITCH, AND SENDING UNITS	
1	PAOZZ	19207	7723309	NUT,PLAIN,KNURLED....................	1
2	PAOZZ	19207	7722333	BUSHING,NONMETALLIC................	1
3	PAOZZ	97403	13211E9046	GASKET................................	1
4	MOOZZ	19207	8724763AR	NONMETALLIC ROD MAKE FROM NONMETALLIC ROD,P/N 8724763.........	V
5	PAOZZ	96906	MS75021-2	CONNECTOR,RECEPTACL TRAILER........	1
6	PAOZZ	19207	7731428	COVER,ELECTRICAL CO.................	1
7	PAOZZ	96906	MS90728-11	SCREW,CAP,HEXAGON H.................	4
8	PAOZZ	19207	7056709	TERMINAL,LUG.........................	2
9	PAOZZ	96906	MS35335-33	WASHER,LOCK..........................	4
10	PAOZZ	96906	MS17829-4C	NUT,SELF-LOCKING,HE.................	4
11	MOOZZ	81349	M13486/1-5AR	WIRE,ELECTRICAL MAKE FROM ELECTRICAL WIRE,P/N M13486/1-5......	V
12	PAOZZ	06046	SG202-48006	GENERATOR,TACHOMETE SENDING UNIT...	1
13	PAOZZ	06046	029-20541	SHAFT,DRIVE TACHOMETER.............	1
14	PAOZZ	97403	13204E2509	ADAPTER,SPEEDOMETER.................	1
15	PAOZZ	97403	13211E9122	ADAPTER,SPEEDOMETER.................	1
16	PAOZZ	96906	MS28778-8	PACKING,PREFORMED...................	1
17	PAOZZ	96906	MS90728-8L	BOLT,SELF-LOCKING...................	6
18	PAOZZ	96906	MS27183-10	WASHER,FLAT..........................	6
19	PAOZZ	47876	2-401-40	TRANSMITTER,LIQUID FUEL LEVEL TRANSMITTER..........................	1
20	PAOZZ	19207	11652124	GASKET................................	1
21	PAOZZ	06853	228600	SWITCH,PRESSURE STOPLIGHT SWITCH...	1

END OF FIGURE

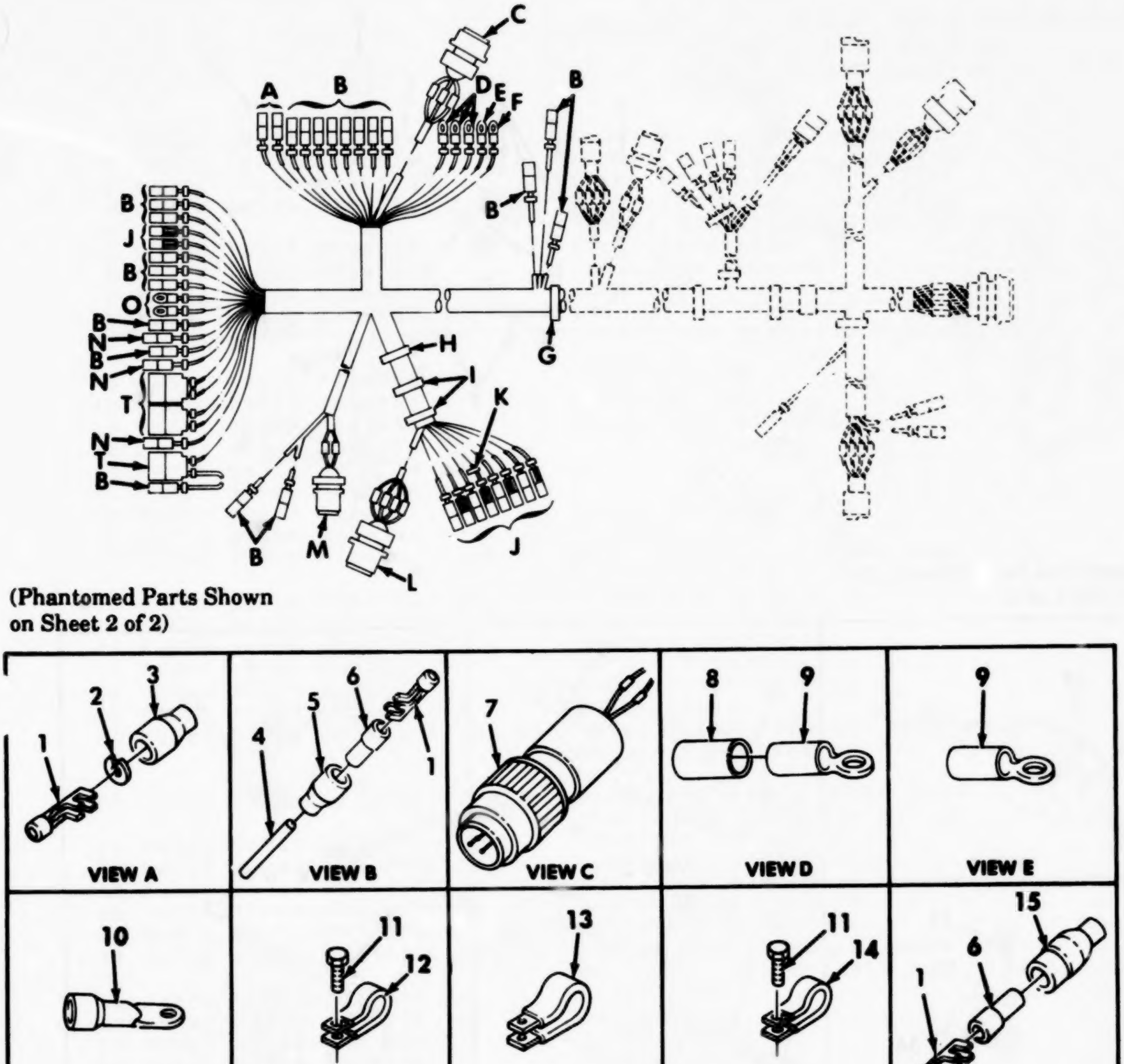

Figure 21. Control Wiring Harness, 12357211, and Mounting Hardware (Sheet 1 of 2).

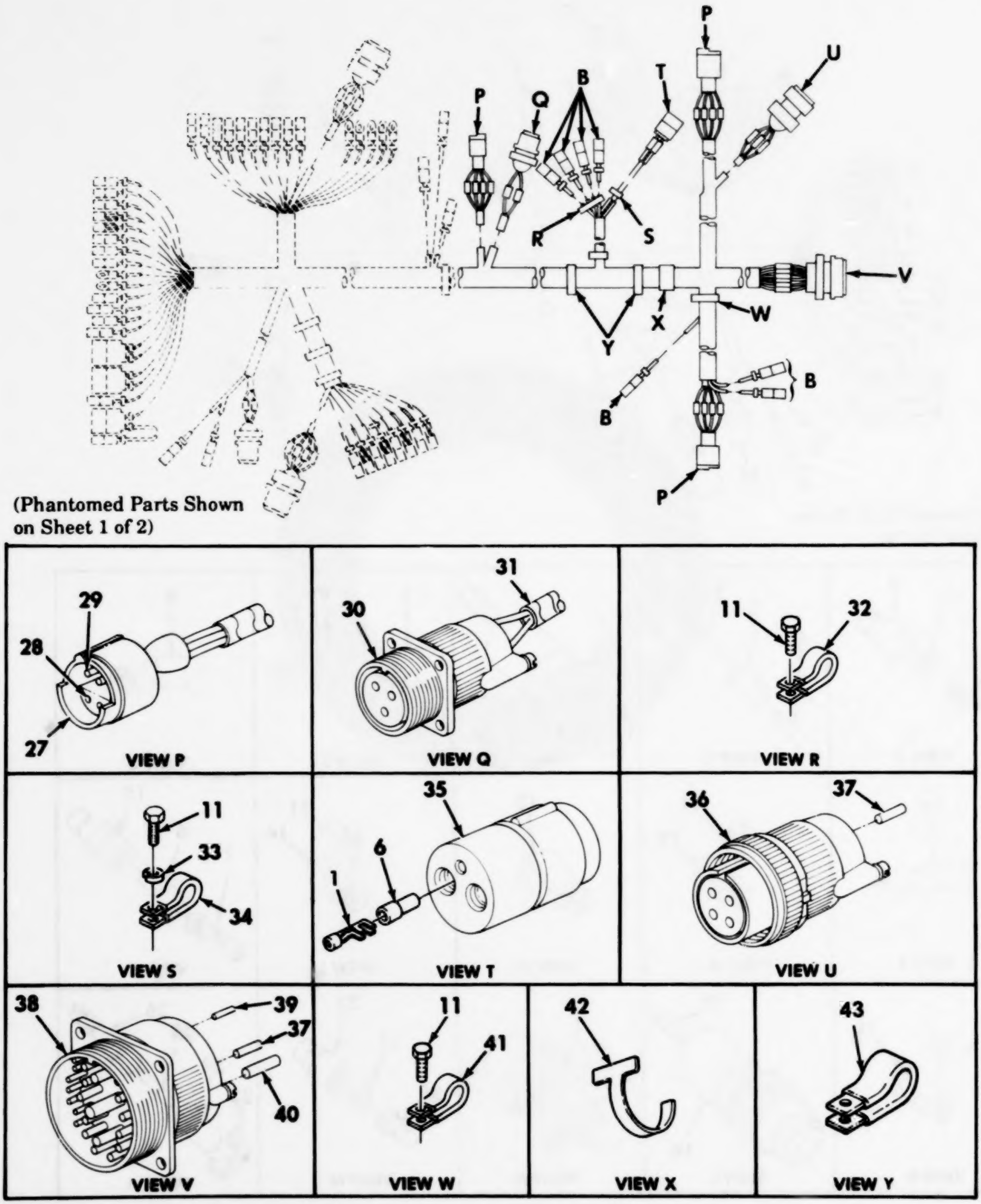

Figure 21. Control Wiring Harness, 12357211, and Mounting Hardware (Sheet 2 of 2).

(1) ITEM NO	(2) SMR CODE	(3) CAGEC	(4) PART NUMBER	(5) DESCRIPTION AND USABLE ON CODES(UOC)	(6) QTY
				GROUP AJ: ELECTRICAL INSTALLATION FIG.21 CONTROL WIRING HARNESS, 12357211, AND MOUNTING HARDWARE	
1	PAOZZ	19207	8338564	TERMINAL ASSEMBLY..................	49
2	PAOZZ	19207	8338570	WASHER FLAT........................	2
3	PAOZZ	19207	8338569	SHELL,HEAD LIGHT CI................	2
4	MOOZZ	81349	M13486/1-5AR	WIRE,ELECTRICAL MAKE FROM ELECTRICAL WIRE,P/N M13486/1-5......	V
5	PAOZZ	19207	8338561	SHELL,ELECTRICAL,CO................	33
6	PAOZZ	19207	8338562	INSULATOR,BUSHING..................	47
7	PAFZZ	96906	MS3456W16-10S	CONNECTOR,PLUG,ELEC................	1
8	MOOZZ	81349	M23053/1-101-0AR	INSULATION SLEEVING MAKE FROM INSULATION SLEEVING,P/N M23053/1-101-0...........................	V
9	PAOZZ	19207	7056706	TERMINAL,LUG.......................	4
10	PAOZZ	19207	7056707	TERMINAL,LUG.......................	1
11	PAFZZ	96906	MS51850-65	SCREW,TAPPING THREA................	8
12	PAFZZ	96906	MS21333-77	CLAMP,LOOP.........................	1
13	PAFZZ	96906	MS21334-33	CLAMP,LOOP.........................	2
14	PAFZZ	96906	MS21334-34	CLAMP,LOOP.........................	2
15	PAOZZ	19207	7982401	CONNECTOR,ELECTRICA................	6
16	PAFZZ	96906	MS21333-102	CLAMP,LOOP.........................	1
17	MOOZZ	81349	M13486/1-3AR	WIRE,ELECTRICAL MAKE FROM WIRE, ELECTRICAL,P/N M13486/1-3...........	V
18	PAFZZ	96906	MS3456W14S2S	CONNECTOR,PLUG,ELEC................	1
19	PAFZZ	96906	MS3450W16-10P	CONNECTOR,RECEPTACL................	1
20	PAOZZ	96906	MS27148-2	CONTACT,ELECTRICAL.................	3
21	PAOZZ	19207	8338567	WASHER,SLOTTED.....................	3
22	PAOZZ	19207	8338566	SHELL,ELECTRICAL CO................	3
23	PAOZZ	81349	M43436/4-1	BAND,MARKER........................	110
24	MOOZZ	81349	M23053/1-102-0AR	INSULATION SLEEVING MAKE FROM INSULATION SLEEVING,P/N M23053/1-102-0...........................	V
25	MOOZZ	81349	M13486/1-7AR	WIRE,ELECTRICAL MAKE FROM ELECTRICAL WIRE,P/N M13486/1-7......	V
26	PAOZZ	59730	TGO	TERMINAL...........................	3
27	PAFZZ	71468	120-1806-000	CONNECTOR,PLUG,ELEC................	3
28	PAFZZ	71468	031-1267-001	CONTACT,ELECTRICAL.................	6
29	PAFZZ	71468	030-2196-001	PIN,GROOVED,HEADLES................	6
30	PAFZZ	96906	MS3450W16-10S	CONNECTOR,RECEPTCAL................	1
31	MOOZZ	81349	M13486/2-2AR	CABLE,SPECIAL PURPO MAKE FROM SPECIAL PURPOSE CABLE,P/N M13486/2-2	V
32	PAFZZ	96906	MS21333-69	CLAMP,LOOP.........................	3
33	PAFZZ	96906	MS35335-32	WASHER,LOCK........................	1
34	PAOZZ	96906	MS21333-67	CLAMP,LOOP.........................	1
35	PAFZZ	96906	MS27145-1	SHELL,ELECTRICAL...................	4
36	PAFZZ	96906	MS3456W20-4S	CONNECTOR,PLUG.....................	1
37	MFFZZ	19207	8724763AR	NONMETALLIC ROD MAKE FROM NONMETALLIC ROD,P/N 8724763.........	V
38	PAFZZ	96906	MS3450W36-9P	CONNECTOR,RECEPTACL................	1

(1) ITEM NO	(2) SMR CODE	(3) CAGEC	(4) PART NUMBER	(5) DESCRIPTION AND USABLE ON CODES(UOC)	(6) QTY
39	MFFZZ	19207	8724762AR	NONMETALLIC ROD MAKE FROM NONMETALLIC ROD,P/N 8724762.........	V
40	MFFZZ	19207	8724764AR	NONMETALLIC ROD MAKE FROM NONMETALLIC ROD P/N 8724764.........	V
41	PAFZZ	96906	MS21333-65	CLAMP,LOOP............................	1
42	PAOZZ	81349	M43436/1-3	BAND MARKER...........................	1
43	PAFZZ	96906	MS21333-123	CLAMP,LOOP............................	3

END OF FIGURE

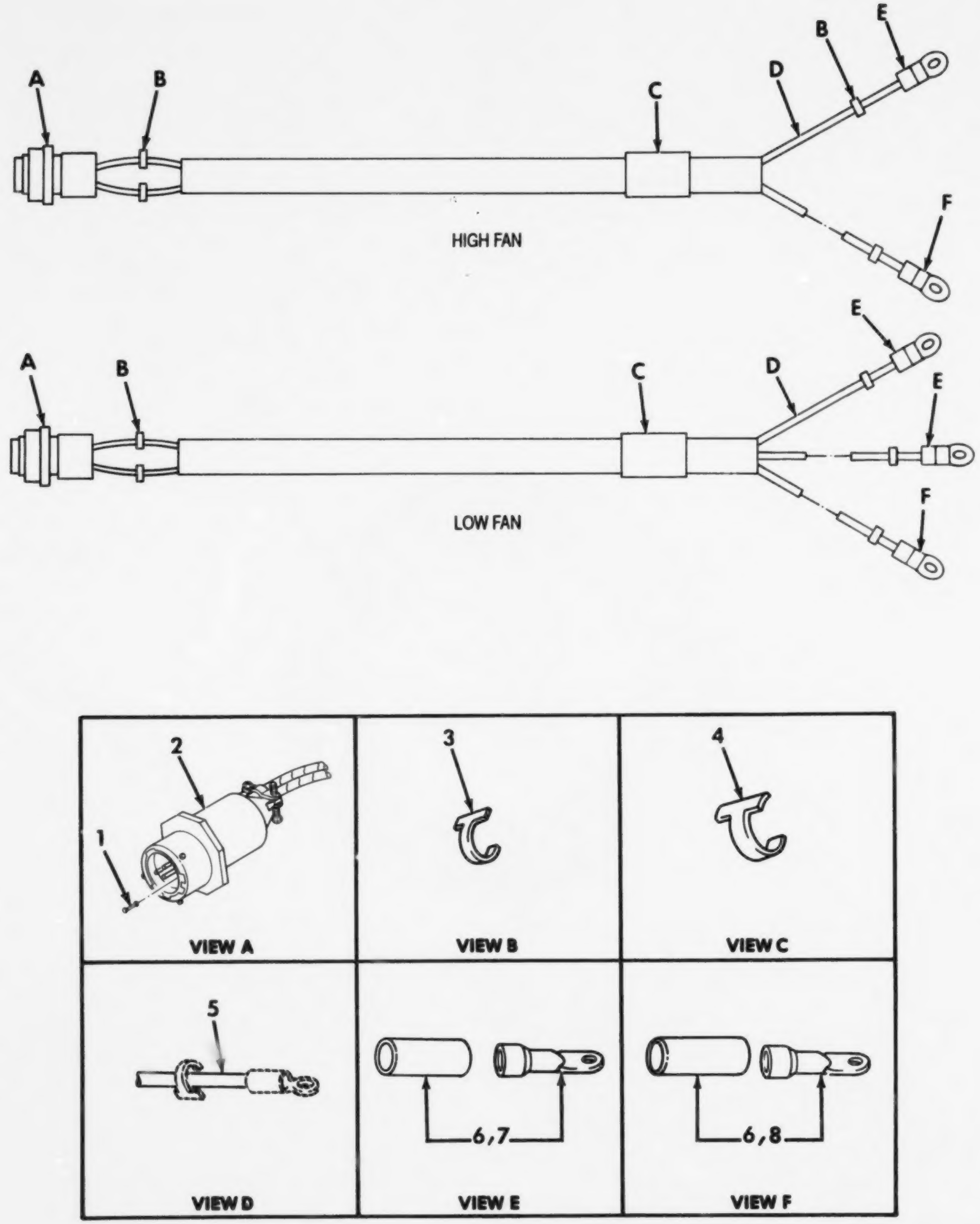

Figure 22. High/Low Ventilation Wiring Harnesses – 12357205 and 12357204.

(1) ITEM NO	(2) SMR CODE	(3) CAGEC	(4) PART NUMBER	(5) DESCRIPTION AND USABLE ON CODES(UOC)	(6) QTY
				GROUP AJ: ELECTRICAL INSTALLATION FIG.22 HIGH/LOW VENTILATION WIRING HARNESSES-12357205 AND 12357204	
1	PAOZZ	96906	MS25251-16	PLUG,END,SEAL,ELECT..................	2
2	PAOZZ	96906	MS3111F12-3P	CONNECTOR,PLUG,ELEC..................	2
3	PAOZZ	81349	M43436/3-1	BAND,MARKER..........................	9
4	PAOZZ	81349	M43436/1-3	BAND,MARKER..........................	2
5	MOOZZ	81349	M13486/1-3AR	WIRE,ELECTRICAL MAKE FROM ELECTRICAL WIRE,P/N M13486/1-3......	V
6	MOOZZ	81349	M23053/1-102-0AR	INSULATION SLEEVING MAKE FROM INSULATION SLEEVING,P/N M23053/1-102-0...........................	V
7	PAOZZ	19207	7728640	TERMINAL,LUG.........................	3
8	PAOZZ	19207	7728780	TERMINAL,LUG.........................	2

END OF FIGURE

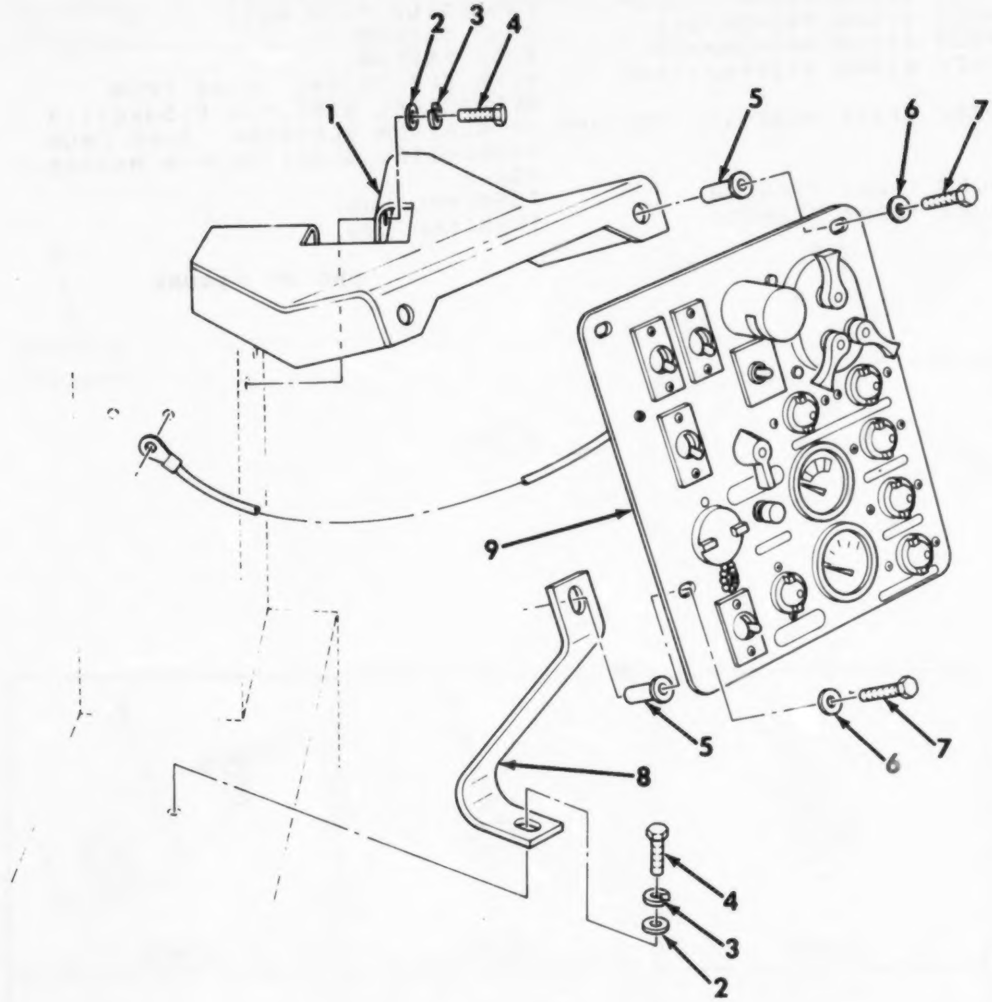

Figure 23. Driver's Instrument Panel Installation.

(1) ITEM NO	(2) SMR CODE	(3) CAGEC	(4) PART NUMBER	(5) DESCRIPTION AND USABLE ON CODES(UOC)	(6) QTY
				GROUP AJ: ELECTRICAL INSTALLATION FIG.23 DRIVER'S INSTRUMENT PANEL INSTALLATION	
1	PFOZZ	19207	12332489	BRACKET	1
2	PAOZZ	96906	MS27183-14	WASHER,FLAT	5
3	PAOZZ	96906	MS35338-46	WASHER,LOCK	5
4	PAOZZ	96906	MS18154-58	SCREW,CAP,HEXAGON H	5
5	PAOZZ	03018	01420	NUT,SLEEVE	3
6	PAOZZ	96906	MS27183-10	WASHER,FLAT	3
7	PAOZZ	96906	MS90728-8	SCREW,CAP,HEXAGON H	3
8	PFOZZ	19207	12332488	BRACKET,DOUBLE ANGL	1
9	PFOOO	19207	12369101	PANEL,INSTRUMENT	1

END OF FIGURE

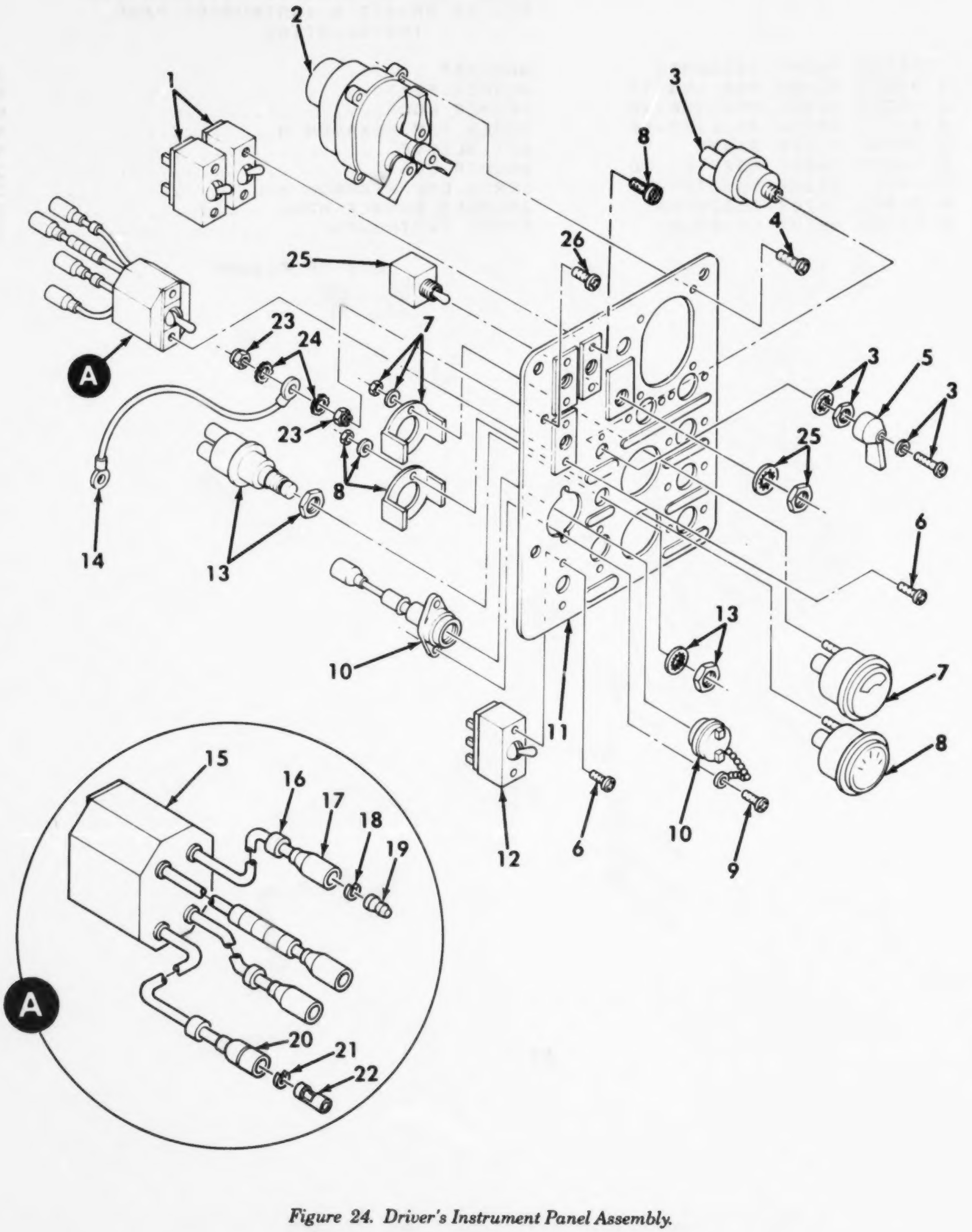

Figure 24. Driver's Instrument Panel Assembly.

(1) ITEM NO	(2) SMR CODE	(3) CAGEC	(4) PART NUMBER	(5) DESCRIPTION AND USABLE ON CODES(UOC)	(6) QTY
				GROUP AJ: ELECTRICAL INSTALLATION FIG.24 DRIVER'S INSTRUMENT PANEL ASSEMBLY	
1	PAOZZ	96906	MS39061-1	.SWITCH,TOGGLE.....................	2
2	PAOZZ	96906	MS51113-1	.SWITCH,VEHICULAR LI...............	1
3	PAOZZ	96906	MS39060-2	.SWITCH,ROTARY IGNITION............	1
4	PAOZZ	96906	MS35207-266	.SCREW,MACHINE.....................	4
5	PAOZZ	19207	5381088	.HANDLE,SWITCH.....................	1
6	PAOZZ	96906	MS35206-243	.SCREW,MACHINE.....................	8
7	PAOZZ	96906	MS24532-2 REV G	.METER,SPECIAL SCALE...............	1
8	PAOZZ	96906	MS24544-2	.INDICATOR,LIQUID QU...............	1
9	PAOZZ	96906	MS35206-230	.SCREW,MACHINE.....................	2
10	PAOZZ	19207	10901121	.LEAD,ELECTRICAL...................	1
11	PFOZZ	19207	12357148	.PLATE,MOUNTING,INST...............	1
12	PAOZZ	96906	MS39061-4	.SWITCH,TOGGLE.....................	1
13	PAOZZ	19207	11640178	.SWITCH,ENGINE START...............	1
14	PAOZZ	19207	12334676	.LEAD,ELECTRICAL...................	1
15	PAOZZ	81349	7954899	.SWITCH,TOGGLE MASTER..............	1
16	PAOZZ	81349	M43436/1-1	.BAND,MARKER.......................	8
17	PAOZZ	19207	8338572	.SHELL,ELECTRICAL CO...............	3
18	PAOZZ	19207	8338573	.WASHER,SLOTTED....................	3
19	PAOZZ	96906	MS27148-1	.CONTACT,ELECTRICAL................	3
20	PAOZZ	19207	8338569	.SHELL,HEAD LIGHT CI...............	1
21	PAOZZ	19207	8338570	.WASHER,FLAT.......................	1
22	PAOZZ	19207	8338564	.TERMINAL ASSEMBLY.................	1
23	PAOZZ	96906	MS21083N08	.NUT,SELF-LOCKING,HE...............	2
24	PAOZZ	96906	MS35335-31	.WASHER,LOCK.......................	2
25	PAOZZ	96906	MS24524-21	.SWITCH,TOGGLE.....................	1
26	PAOZZ	96906	MS35206-248	.SCREW,MACHINE.....................	1

END OF FIGURE

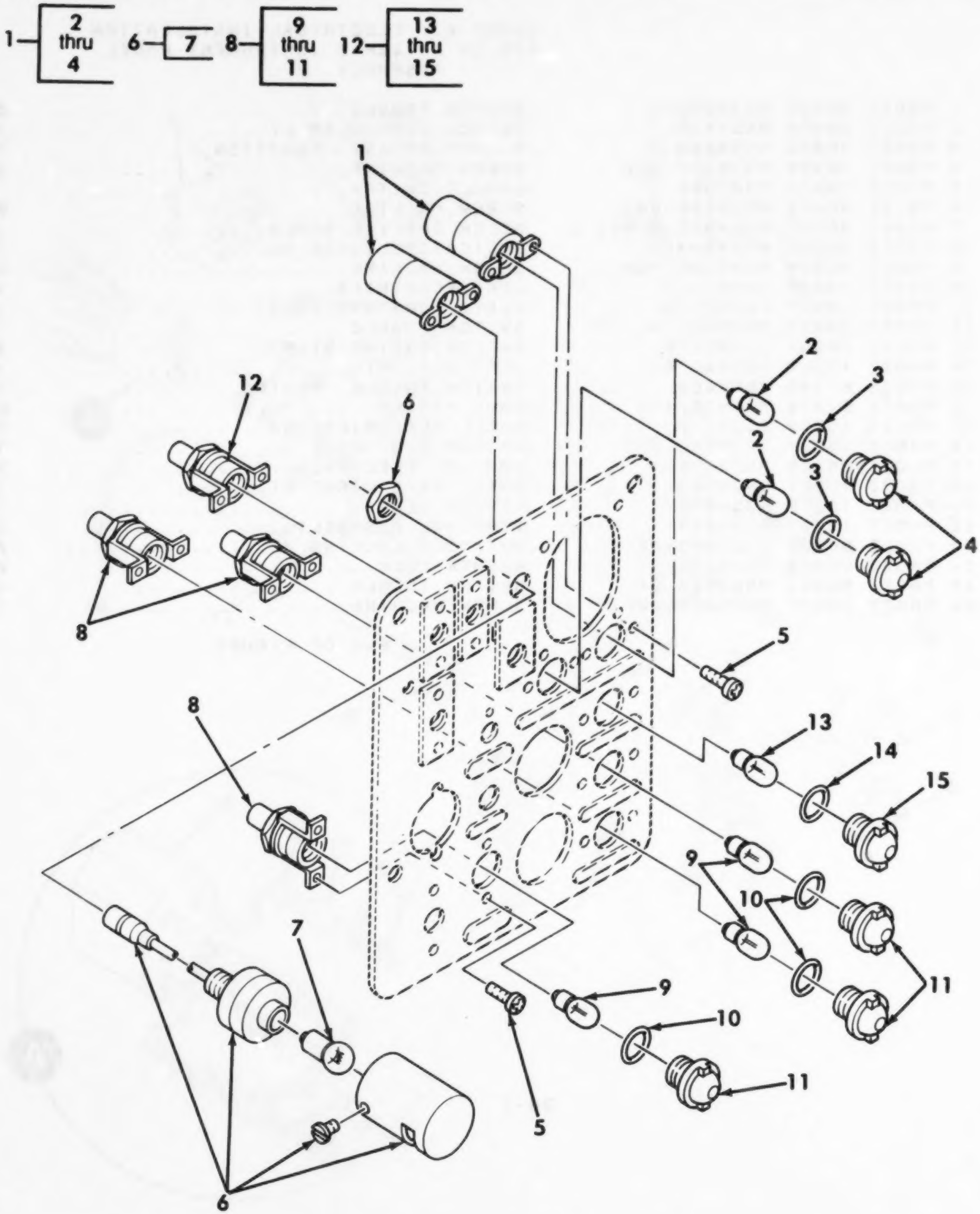

Figure 25. Driver's Instrument Panel Lamps and Indicators.

(1) ITEM NO	(2) SMR CODE	(3) CAGEC	(4) PART NUMBER	(5) DESCRIPTION AND USABLE ON CODES(UOC)	(6) QTY
				GROUP AJ: ELECTRICAL INSTALLATION FIG.25 DRIVER'S INSTRUMENT PANEL LAMPS AND INDICATORS	
1	PAOZZ	49367	P400136-1	.LIGHT,INDICATOR LOW TRANS OIL,LOW AIR PRESSURE........................	2
2	PAOZZ	96906	MS25231-1829	..LAMP,INCANDESCENT.................	1
3	PAOZZ	19207	7358626	..PACKING,PREFORMED.................	1
4	PAOZZ	19207	7358672	..LENS,LIGHT........................	1
5	PAOZZ	96906	MS35206-243	.SCREW,MACHINE......................	12
6	PAOOO	74400	M24728	.LIGHT,PANEL........................	1
7	PAOZZ	88204	24MB	..LAMP,INCANDESCENT.................	1
8	PAOZZ	19207	7971111	.LIGHT,INDICATOR UNSPRUNG LOW PRESSURE,PARKING BRAKE..............	3
9	PAOZZ	96906	MS25231-1829	..LAMP,INCANDESCENT.................	3
10	PAOZZ	19207	7358626	..PACKING,PREFORMED.................	3
11	PAOZZ	19207	7358672	..LENS,LIGHT........................	3
12	PAOZZ	23382	16B1582726	.LIGHT,INDICATOR HIGH BEAM..........	1
13	PAOZZ	96906	MS25231-1829	..LAMP,INCANDESCENT.................	1
14	PAOZZ	19207	7358626	..PACKING,PREFORMED.................	1
15	PAOZZ	19207	7358622	..LENS,LIGHT........................	1

END OF FIGURE

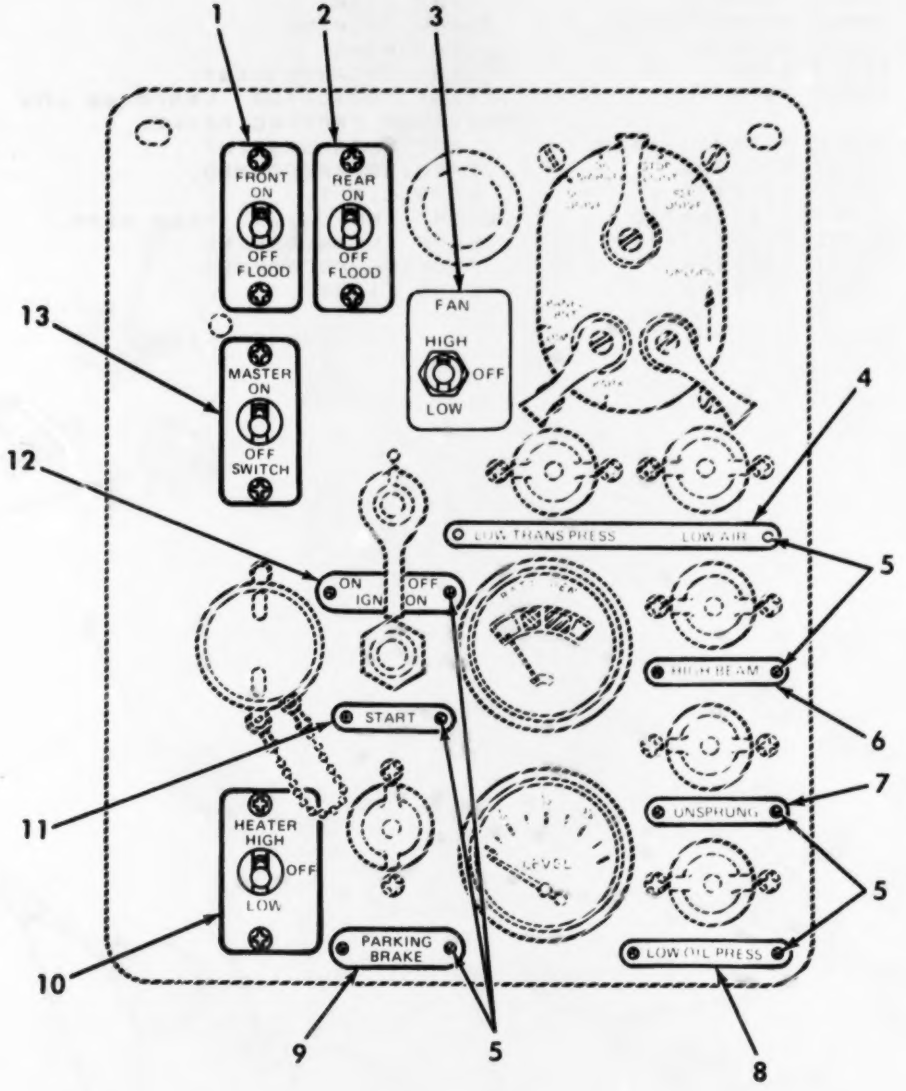

Figure 26. Driver's Instrument Panel Data Plates.

(1) ITEM NO	(2) SMR CODE	(3) CAGEC	(4) PART NUMBER	(5) DESCRIPTION AND USABLE ON CODES(UOC)	(6) QTY
				GROUP AJ: ELECTRICAL INSTALLATION FIG.26 DRIVER'S INSTRUMENT PANEL DATA PLATES	
1	PFOZZ	97403	13204E2522	.PLATE,INSTRUCTION FRONT ON-OFF FLOOD..................................	1
2	PFOZZ	97403	13204E2523	.PLATE,INSTRUCTION REAR ON-OFF FLOOD..................................	1
3	PFOZZ	19207	12357206	.PLATE,IDENTIFICATIO FAN HIGH-LOW..	1
4	PFOZZ	97403	13214E2934	.PLATE,INSTRUCTION LOW XMSN PRESS-LOW AIR.............................	1
5	PAOZZ	96906	MS21318-21	.SCREW,DRIVE........................	14
6	PFOZZ	97403	13214E2933	.PLATE,INSTRUCTION HIGH BEAM.......	1
7	PFOZZ	19207	12332152	.PLATE,IDENTIFICATIO UNSPRUNG......	1
8	PFOZZ	19207	12332154	.PLATE,IDENTIFICATIO LOW OIL PRESS.	1
9	PFOZZ	19207	12332153	.PLATE,IDENTIFICATIO PARKING BRAKE.	1
10	PFOZZ	97403	13204E2528	.PLATE,INSTRUCTION HEATER HIGH-OFF LOW................................	1
11	PFOZZ	97403	13204E2527	.PLATE,INSTRUCTION START...........	1
12	PFOZZ	97403	13204E2526	.PLATE,INSTRUCTION ON-OFF IGNITION.	1
13	PFOZZ	97403	13204E2525	.PLATE,INSTRUCTION MASTER ON-OFF SWITCH.............................	1

END OF FIGURE

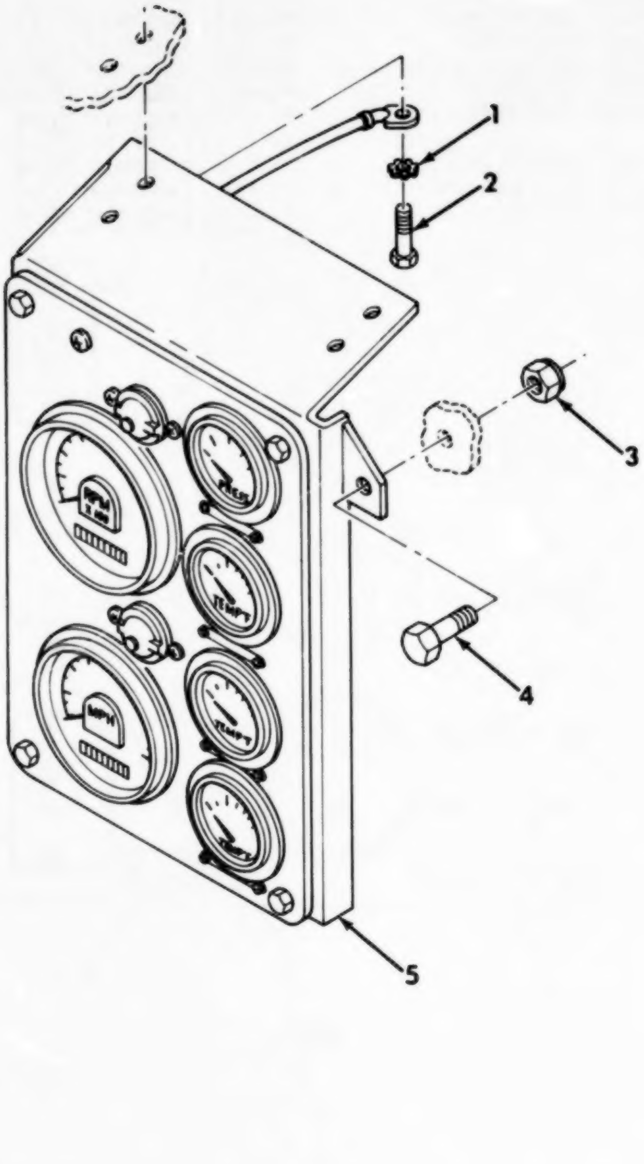

Figure 27. Gage Panel Installation.

(1) ITEM NO	(2) SMR CODE	(3) CAGEC	(4) PART NUMBER	(5) DESCRIPTION AND USABLE ON CODES(UOC)	(6) QTY
				GROUP AJ: ELECTRICAL INSTALLATION FIG.27 GAGE PANEL INSTALLATION	
1	PAOZZ	96906	MS35335-35	WASHER,LOCK..........................	4
2	PAOZZ	96906	MS18154-58	SCREW,CAP,HEXAGON H.................	4
3	PAOZZ	96906	MS17829-6C	NUT,SELF-LOCKING,HE.................	1
4	PAOZZ	96906	MS18154-60	SCREW,CAP,HEXAGON H.................	1
5	PFOOO	19207	12357146	INDICATOR ASSEMBLY..................	1

END OF FIGURE

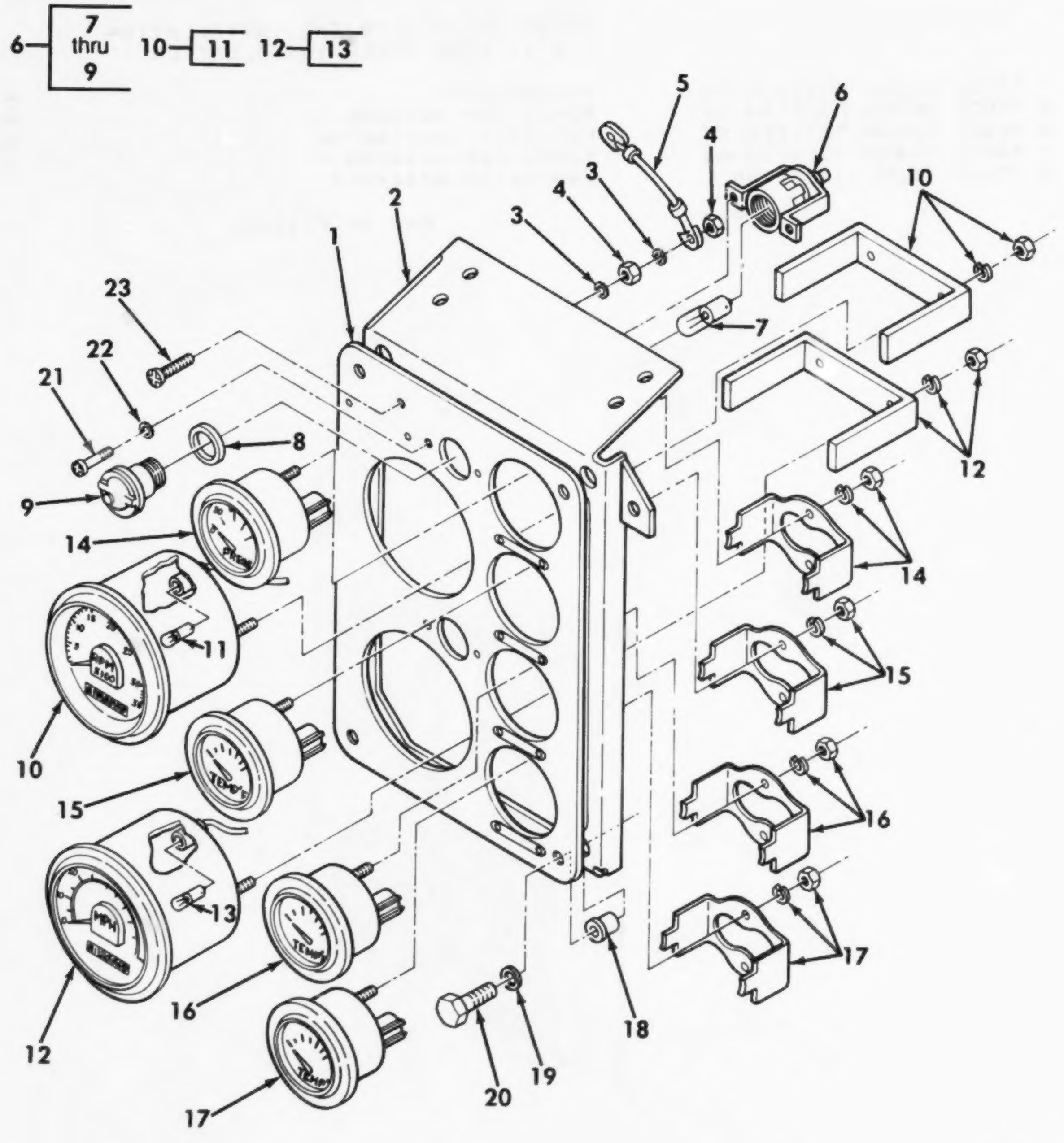

Figure 28. Gage Panel Assembly.

(1) ITEM NO	(2) SMR CODE	(3) CAGEC	(4) PART NUMBER	(5) DESCRIPTION AND USABLE ON CODES(UOC)	(6) QTY
				GROUP AJ: ELECTRICAL INSTALLATION FIG.28 GAGE PANEL ASSEMBLY	
1	XAOZZ	97403	13204E2519	.PANEL	1
2	PFOZZ	97403	13211E9025	.BRACKET,ANGLE	1
3	PAOZZ	96906	MS35335-32	.WASHER,LOCK	2
4	PAOZZ	96906	MS35649-202	.NUT,PLAIN,HEXAGON	2
5	PAOZZ	97403	13211E9093	.LEAD,ELECTRICAL	1
6	PAOZZ	19207	8376500	.LIGHT,INDICATOR	2
7	PAOZZ	96906	MS25231-1829	..LAMP,INCANDESCENT	1
8	PAOZZ	19207	7358626	..PACKING,PREFORMED	1
9	PAOZZ	19207	7358621	..LENS,LIGHT	1
10	PAOZZ	06046	535D1/47686	.TACHOMETER,MECHANIC	1
11	PAOZZ	96906	MS25231-1819	..LAMP,INCANDESCENT	1
12	PAOZZ	06046	540S2/47685	.SPEEDOMETER	1
13	PAOZZ	96906	MS25231-1819	..LAMP,INCANDESCENT	1
14	PAOZZ	19207	12357149	.INDICATOR,PRESSURE	1
15	PAOZZ	19207	12357150	.INDICATOR,TEMPERATU	1
16	PAOZZ	96906	MS24543-2	.INDICATOR,TEMPERATU	1
17	PAOZZ	19207	12357151	.INDICATOR,TEMPERATU	1
18	PAOZZ	03018	D1420	.NUT,SLEEVE	4
19	PAOZZ	96906	MS27183-10	.WASHER,FLAT	4
20	PAOZZ	96906	MS90728-8	.SCREW,CAP,HEXAGON H	4
21	PAOZZ	96906	MS35206-246	.SCREW,MACHINE	4
22	PAOZZ	96906	MS35335-31	.WASHER,LOCK	4
23	PAOZZ	96906	MS35206-265	.SCREW,MACHINE	1

END OF FIGURE

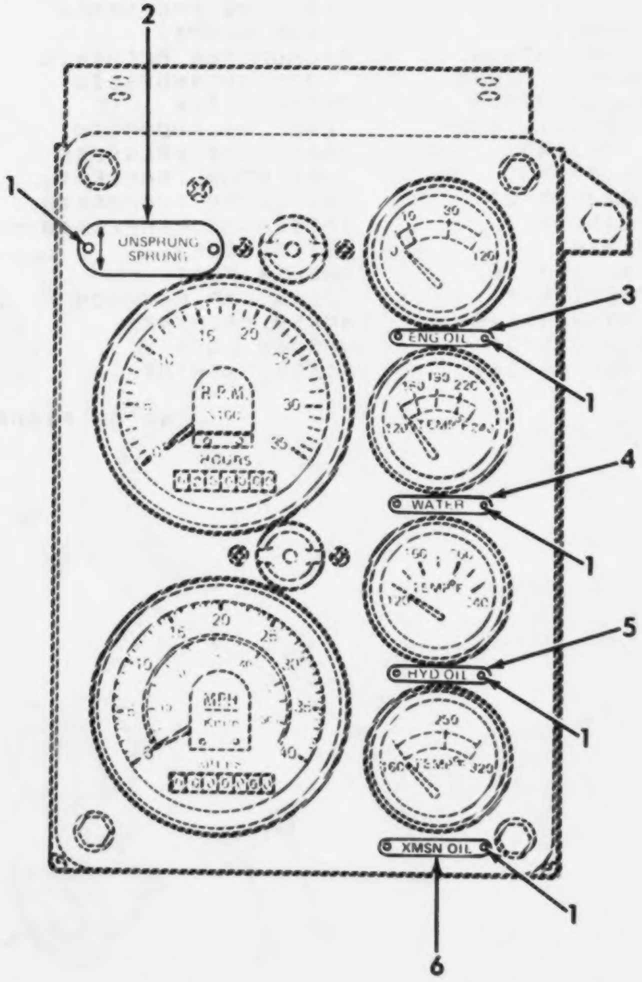

Figure 29. Gage Panel Data Plates.

(1) ITEM NO	(2) SMR CODE	(3) CAGEC	(4) PART NUMBER	(5) DESCRIPTION AND USABLE ON CODES(UOC)	(6) QTY
				GROUP AJ: ELECTRICAL INSTALLATION FIG.29 GAGE PANEL DATA PLATES	
1	PAOZZ	96906	MS51850-1	.SCREW,TAPPING,THREA................	10
2	PFOZZ	97403	13204E2516	.PLATE,INSTRUCTION SPRUNG-UNSPRUNG.	1
3	PFOZZ	97403	13204E2515	.PLATE,IDENTIFICATIO ENG.OIL.......	1
4	PFOZZ	97403	13204E2514	.PLATE,IDENTIFICATIO WATER.........	1
5	PFOZZ	97403	13204E2513	.PLATE,IDENTIFICATIO HYD OIL.......	1
6	PFOZZ	97403	13204E2512	.PLATE,IDENTIFICATIO XMSN OIL......	1

END OF FIGURE

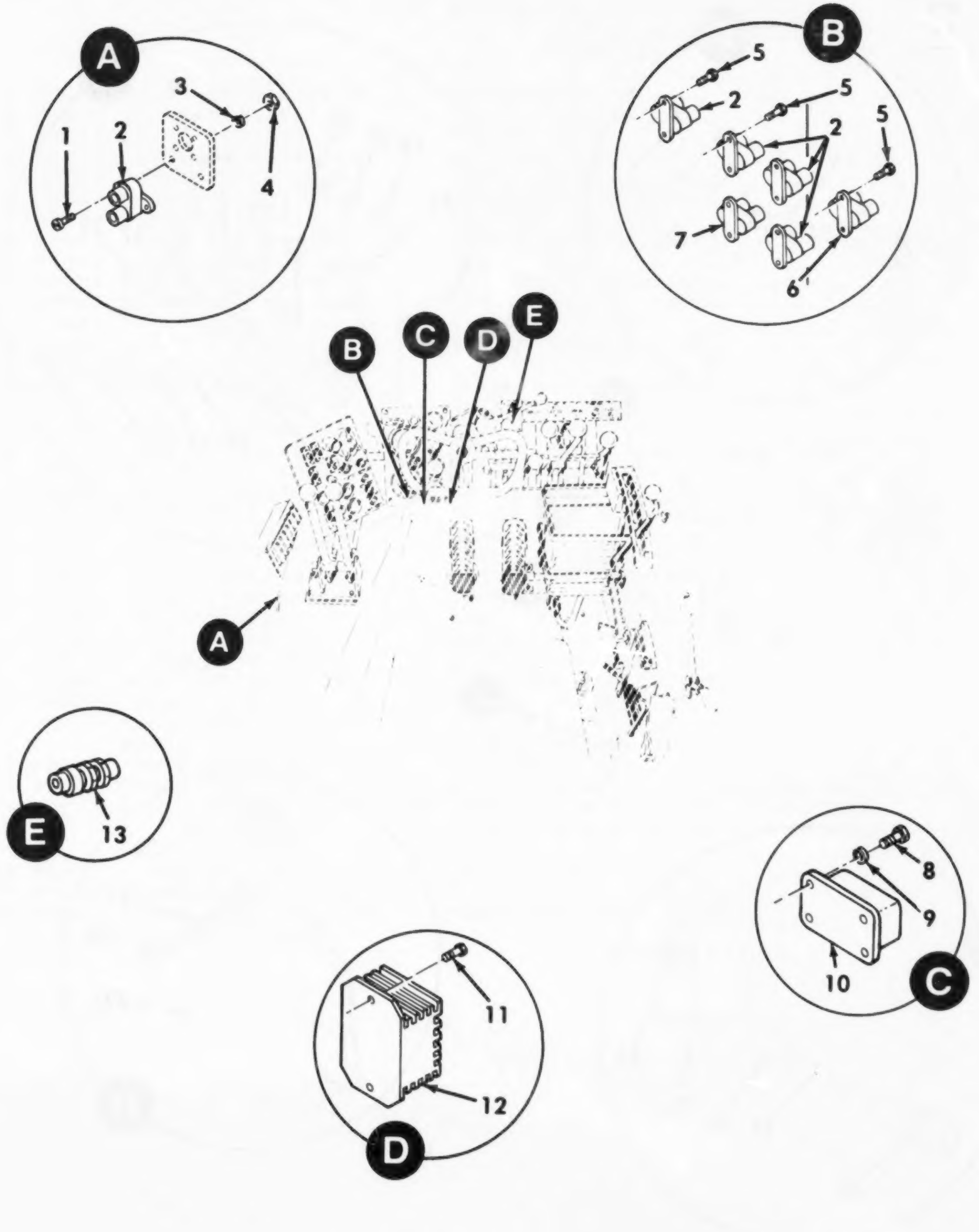

Figure 30. Driver's Compartment Miscellaneous Electrical Components (Sheet 1 of 2).

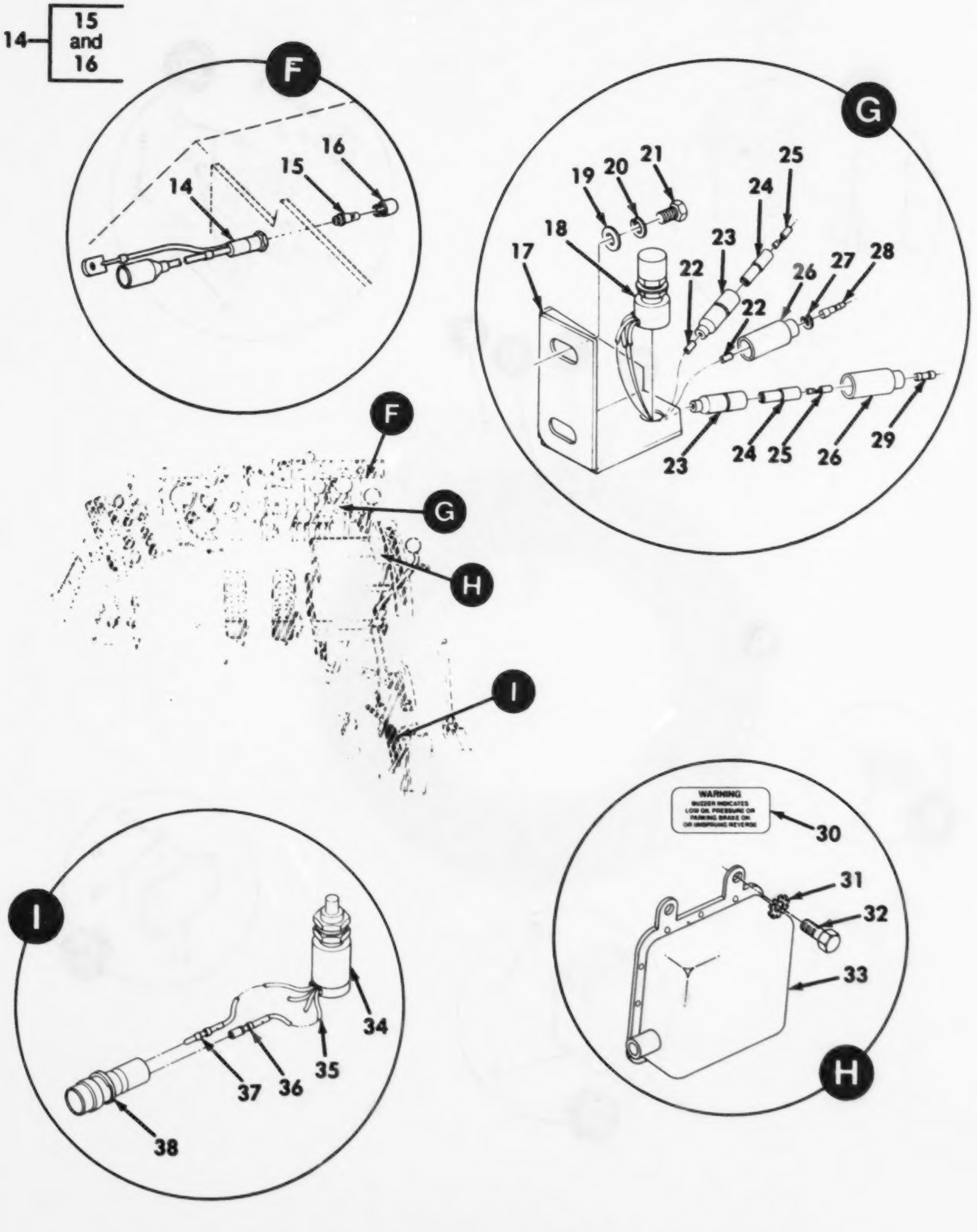

Figure 30. Driver's Compartment Miscellaneous Electrical Components (Sheet 2 of 2).

(1) ITEM NO	(2) SMR CODE	(3) CAGEC	(4) PART NUMBER	(5) DESCRIPTION AND USABLE ON CODES(UOC)	(6) QTY
				GROUP AJ: ELECTRICAL INSTALLATION FIG.30 DRIVER'S COMPARTMENT MISCELLANEOUS ELECTRICAL COMPONENTS	
1	PAOZZ	96906	MS35206-249	SCREW,MACHINE	2
2	PAOZZ	81349	M13516/1-1	CIRCUIT BREAKER	5
3	PAOZZ	96906	MS35333-38	WASHER,LOCK	2
4	PAOZZ	96906	MS35649-282	NUT,PLAIN,HEXAGON	2
5	PAOZZ	96906	MS51850-48	SCREW,TAPPING,THREA	12
6	PAOZZ	81349	M13516/1-2	CIRCUIT BREAKER	1
7	PAOZZ	81349	M13516/1-4	CIRCUIT BREAKER	1
8	PAOZZ	96906	MS51850-25	SCREW,TAPPING,THREA	4
9	PAOZZ	96906	MS35335-30	WASHER,LOCK	4
10	PAOZZ	96906	MS24149D1	RELAY,ELECTROMAGNET	1
11	PAOZZ	96906	MS51850-85	SCREW,TAPPING,THREA	2
12	PAOZZ	19207	12325748	FLASHER,THERMAL	1
13	PAOZZ	19207	11640178	SWITCH,ENGINE START	1
14	PAOOO	97403	13214E2687	LIGHT,UTILITY,VEHIC	1
15	PAOZZ	96906	MS25237-327	.LAMP,INCANDESCENT	1
16	PAOZZ	81349	LC12GN2	.LENS,LIGHT	1
17	PFOZZ	97403	13214E2688	BRACKET,SWITCH	1
18	PAOZZ	19207	7748628	SWITCH,SENSITIVE BILGE PUMP	1
19	PAOZZ	96906	MS27183-14	WASHER,FLAT	2
20	PAOZZ	96906	MS35338-46	WASHER,LOCK	2
21	PAOZZ	96906	MS18154-58	SCREW,CAP,HEXAGON H	2
22	PAOZZ	81349	M43436/3-1	BAND,MARKER	6
23	PAOZZ	19207	8338561	SHELL,ELECTRICAL CO	2
24	PAOZZ	19207	8338562	INSULATOR,BUSHING	2
25	PAOZZ	19207	8338564	TERMINAL ASSEMBLY	2
26	PAOZZ	19207	8338566	SHELL,ELECTRICAL CO	2
27	PAOZZ	19207	8338567	WASHER,SLOTTED	1
28	PAOZZ	96906	MS27148-2	CONTACT,ELECTRICAL	1
29	PAOZZ	96906	MS25251-12	PLUG,END SEAL,ELECT	1
30	PBOZZ	19207	12332237	PLATE,INSTRUCTION	1
31	PAOZZ	96906	MS35335-33	WASHER,LOCK	3
32	PAOZZ	96906	MS90725-6	SCREW,CAP,HEXAGON H	3
33	PAOZZ	19207	8675930	BUZZER	1
34	PAOZZ	96906	MS27240-1	SWITCH,SENSITIVE PARKING BRAKE	1
35	MOOZZ	81349	M23053/4-102-0AR	INSULATION SLEEVING MAKE FROM INSULATION SLEEVING,P/N M23053/4-102-0	V
36	PAOZZ	71468	031-1267-001	CONTACT,ELECTRICAL	2
37	PAOZZ	71468	030-2196-001	PIN,GROOVED,HEADLES	2
38	PAOZZ	71468	120-1809-000	CONNECTOR BODY,PLUG	1

END OF FIGURE

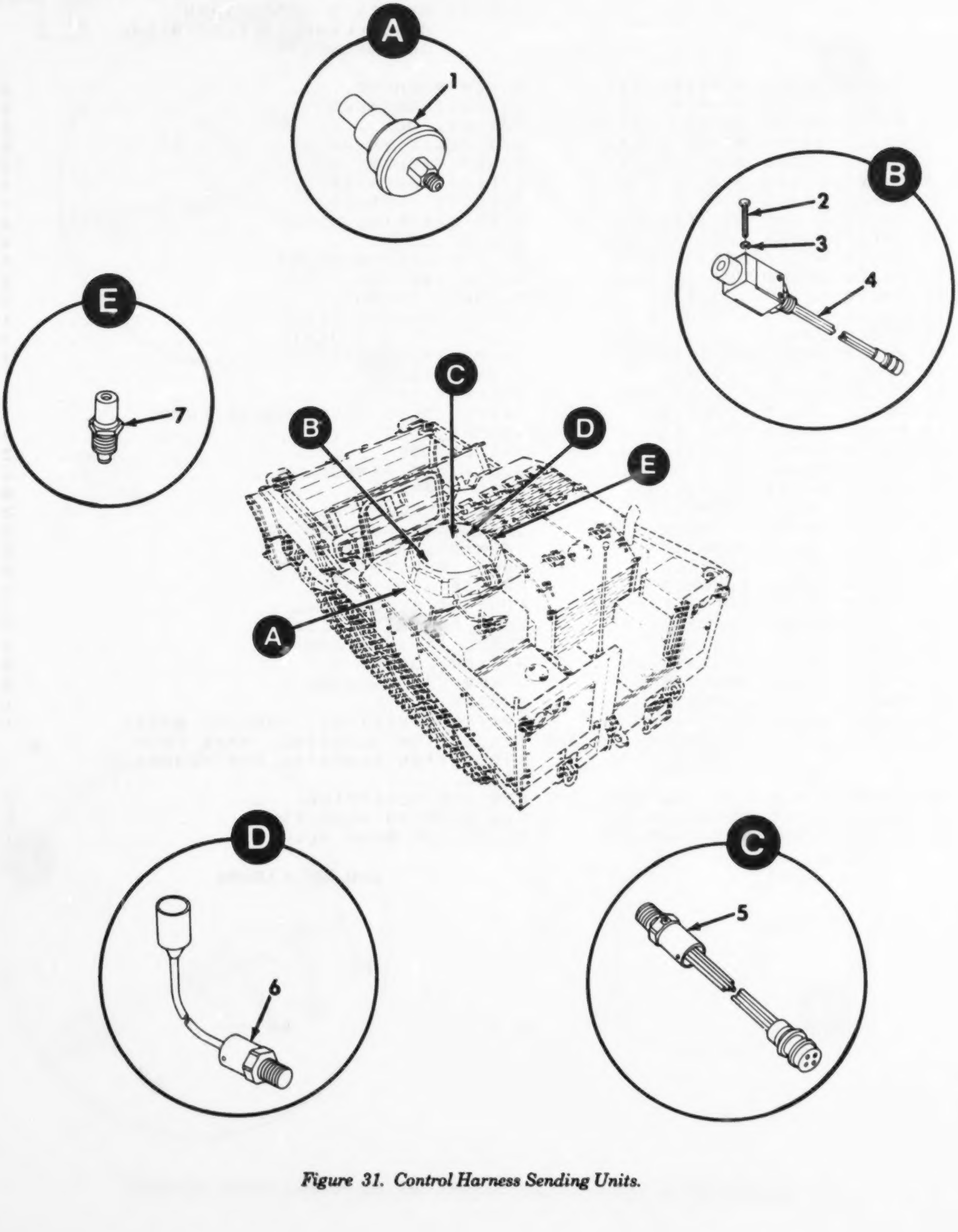

Figure 31. Control Harness Sending Units.

(1) ITEM NO	(2) SMR CODE	(3) CAGEC	(4) PART NUMBER	(5) DESCRIPTION AND USABLE ON CODES(UOC)	(6) QTY
				GROUP AJ: ELECTRICAL INSTALLATION FIG.31 CONTROL HARNESS SENDING UNITS	
1	PAOZZ	96906	MS90530-7	SWITCH,PRESSURE LOW AIR PRESSURE...	1
2	PAOZZ	96906	MS35206-253	SCREW,MACHINE.......................	2
3	PAOZZ	96906	MS35338-42	WASHER,LOCK.........................	2
4	PAOZZ	09049	690PM1095	SWITCH,PRESSURE SPRUNG-UNSPRUNG....	1
5	PAOZZ	96906	MS24537-1	TRANSMITTER,TEMPERA XMSN OIL,HYD OIL,WATER..........................	3
6	PAOZZ	09049	607GB526	SWITCH,PRESSURE XMSN LOW OIL PRESS.	1
7	PAOZZ	09049	607GM532	SWITCH,PRESSURE REVERSE............	1

END OF FIGURE

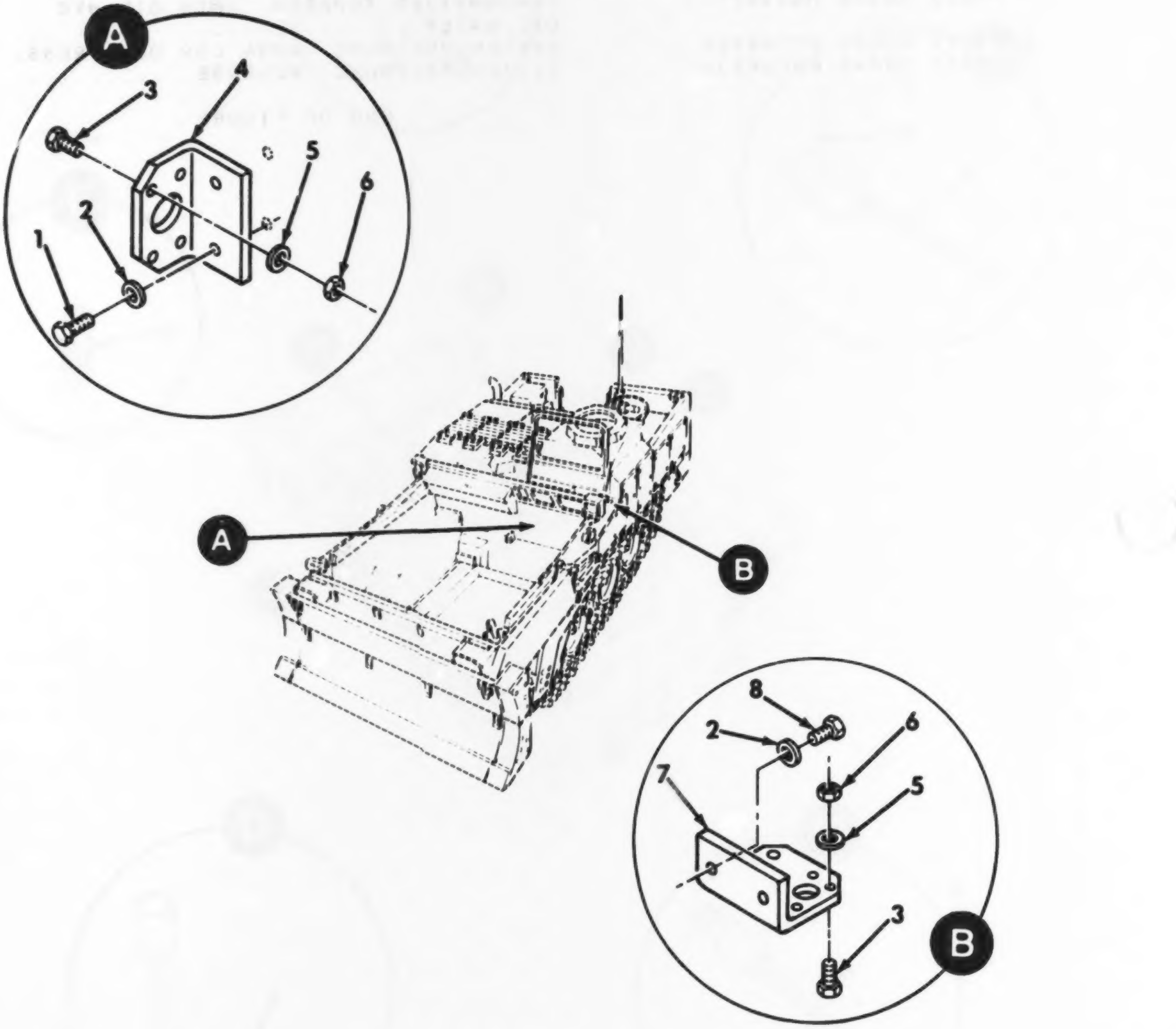

Figure 32. Control Harness Mounting Brackets.

(1) ITEM NO	(2) SMR CODE	(3) CAGEC	(4) PART NUMBER	(5) DESCRIPTION AND USABLE ON CODES(UOC)	(6) QTY
				GROUP AJ: ELECTRICAL INSTALLATION FIG.32 CONTROL HARNESS MOUNTING BRACKETS	
1	PAFZZ	96906	MS90728-3L	BOLT,SELF-LOCKING....................	2
2	PAFZZ	96906	MS27183-10	WASHER,FLAT..........................	4
3	PAFZZ	96906	MS35206-217	SCREW,MACHINE........................	8
4	PFFZZ	19207	12325757	BRACKET,ANGLE........................	1
5	PAFZZ	96906	MS35333-36	WASHER,LOCK..........................	8
6	PAFZZ	96906	MS35649-242	NUT,PLAIN,HEXAGON....................	8
7	PFFZZ	19207	12325758	BRACKET,ANGLE........................	1
8	PAFZZ	96906	MS90728-6L	BOLT,SELF-LOCKING....................	2

END OF FIGURE

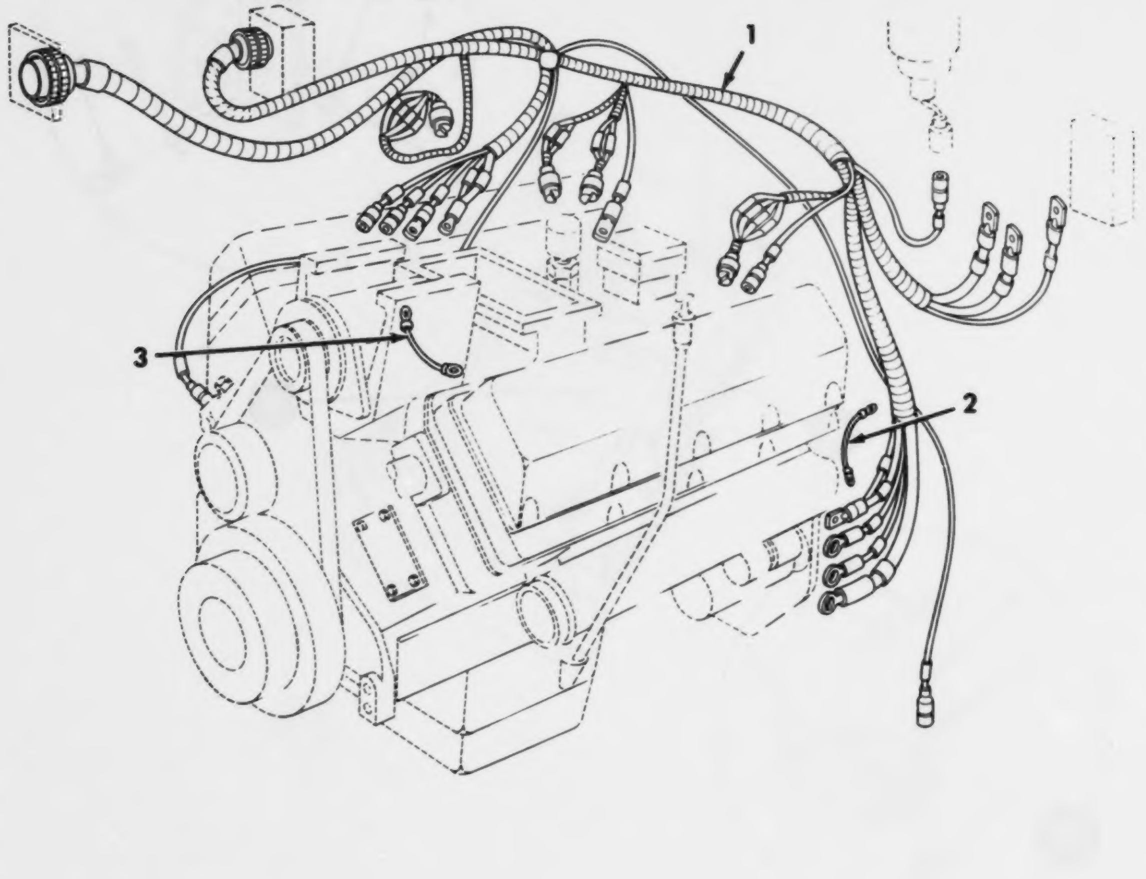

Figure 33. Engine Wiring Harness and Lead Installation.

(1) ITEM NO	(2) SMR CODE	(3) CAGEC	(4) PART NUMBER	(5) DESCRIPTION AND USABLE ON CODES(UOC)	(6) QTY
				GROUP AJ: ELECTRICAL INSTALLATION FIG.33 ENGINE WIRING HARNESS AND LEAD INSTALLATION	
1	PAFFF	19207	12355485	WIRING HARNESS,BRAN ENGINE SEE FIG.34 FOR PARTS BREAKDOWN..........	1
2	PAOZZ	97403	13204E2511	LEAD,ELECTRICAL COLD START THERMOSTAT.........................	1
3	PAOZZ	97403	13214E2703	LEAD,ELECTRICAL ALTERNATOR.........	1

END OF FIGURE

best copy available

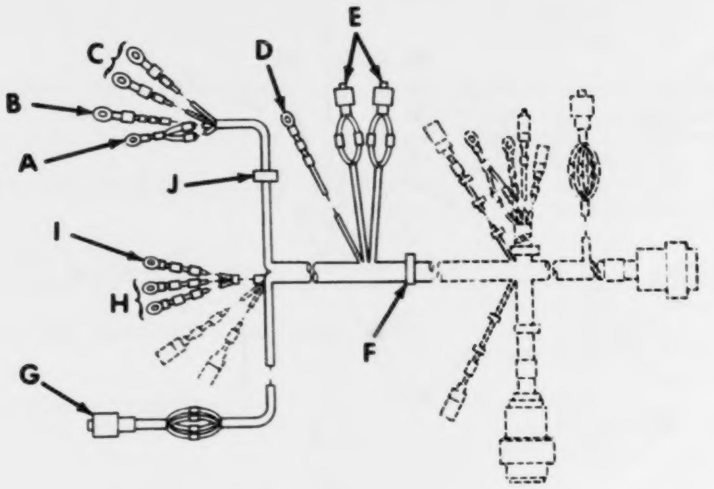

(Phantomed Parts Shown on Sheet 2 of 2)

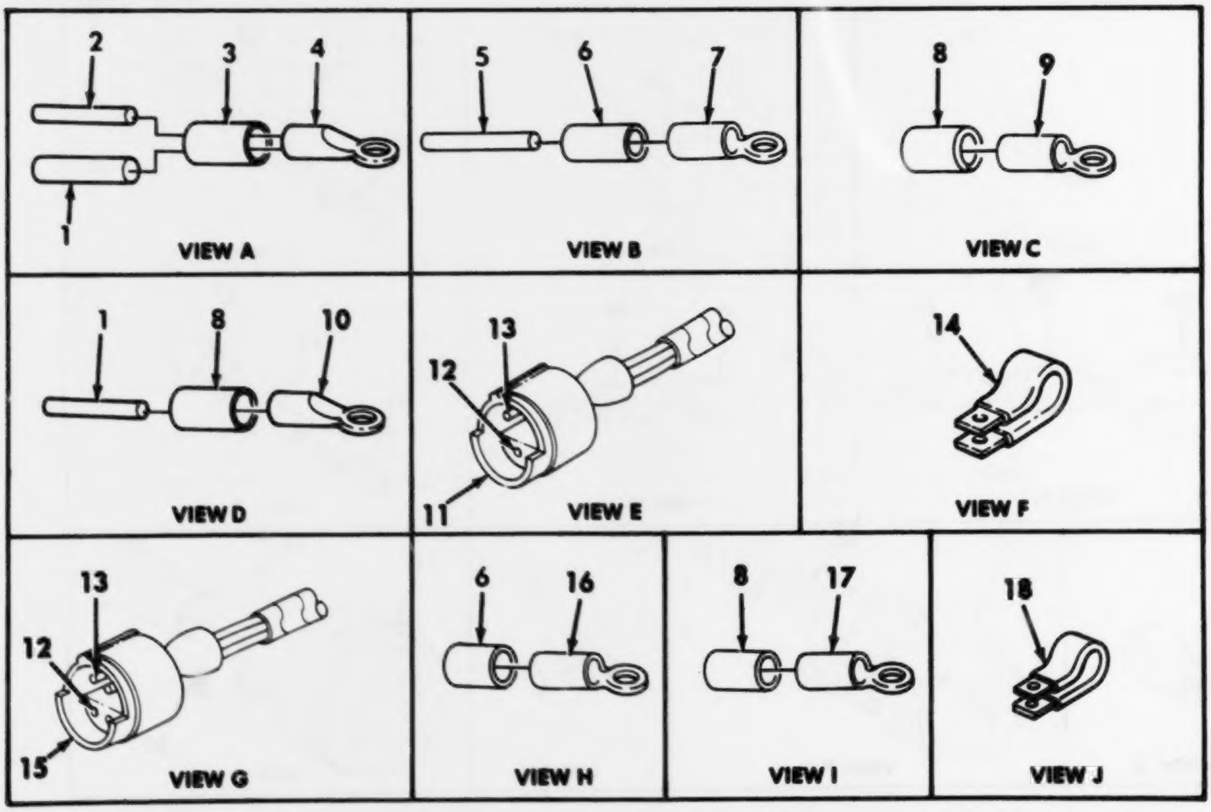

Figure 34. Engine Wiring Harness, 12355485, and Mounting Hardware (Sheet 1 of 2).

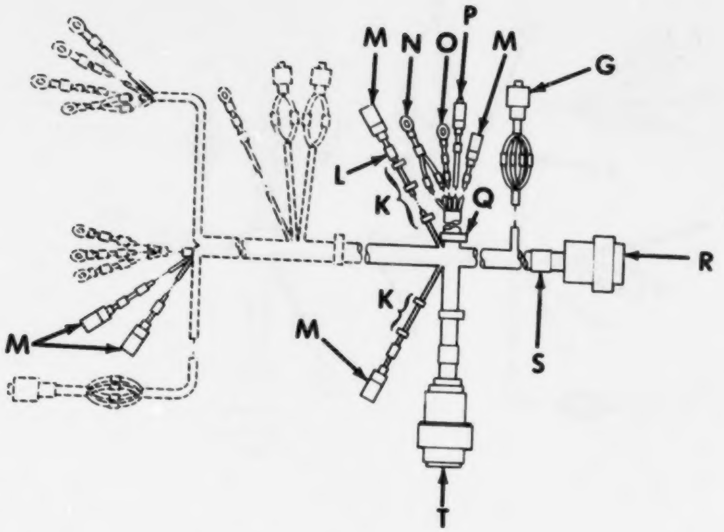

(Phantomed Parts Shown
on Sheet 1 of 2)

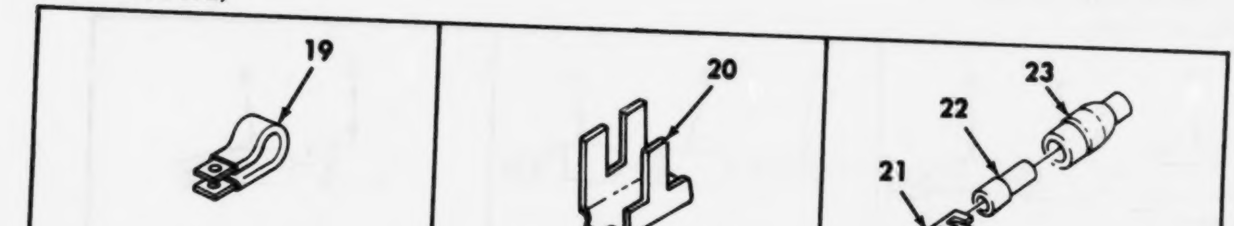

Figure 34. Engine Wiring Harness, 12355485, and Mounting Hardware (Sheet 2 of 2).

(1) ITEM NO	(2) SMR CODE	(3) CAGEC	(4) PART NUMBER	(5) DESCRIPTION AND USABLE ON CODES(UOC)	(6) QTY
				GROUP AJ: ELECTRICAL INSTALLATION FIG.34 ENGINE WIRING HARNESS, 12355485, AND MOUNTING HARDWARE	
1	MOOZZ	81349	M13486/1-5AR	WIRE ELECTRICAL MAKE FROM ELECTRICAL WIRE,P/N M13486/1-5......	V
2	MOOZZ	81349	M13486/1-7AR	WIRE,ELECTRICAL MAKE FROM ELECTRICAL WIRE,P/N M13486/1-7......	V
3	MOOZZ	81349	M23053/1-103-0AR	SLEEVING,INSULATION MAKE FROM INSULATION SLEEVING,P/N M23053/1-103-0..............................	V
4	PAOZZ	19207	7056712	TERMINAL...........................	1
5	MOOZZ	81349	M13486/1-9AR	WIRE,ELECTRICAL MAKE FROM ELECTRICAL WIRE,P/N M13486/1-9......	V
6	MOOZZ	81349	M23053/1-102-0AR	INSULATION SLEEVING MAKE FROM INSULATION SLEEVING,P/N M23053/1-102-0..............................	V
7	PAOZZ	96906	MS20659-142	TERMINAL,LUG.......................	1
8	MOOZZ	81349	M23053/1-101-0AR	INSULATION SLEEVING MAKE FROM INSULATION SLEEVING,P/N M23053/1-101-0..............................	V
9	PAOZZ	96906	MS20659-164	TERMINAL,LUG.......................	2
10	PAOZZ	19207	7056708	TERMINAL,LUG.......................	1
11	PAFZZ	71468	120-1806-000	CONNECTOR,PLUG,ELEC................	2
12	PAFZZ	71468	031-1267-001	CONTACT,ELECTRICAL.................	8
13	PAFZZ	71468	030-2196-001	PIN,GROOVED,HEADLES................	8
14	PAFZZ	96906	MS21333-127	CLAMP,LOOP.........................	1
15	PAFZZ	11083	7N9738	CONNECTOR BODY,PLUG................	2
16	PAOZZ	59730	TG2	TERMINAL,LUG.......................	3
17	PAOZZ	19207	7056706	TERMINAL,LUG.......................	1
18	PAFZZ	96906	MS21333-111	CLAMP,LOOP.........................	1
19	PAFZZ	96906	MS21333-117	CLAMP,LOOP.........................	6
20	PAOZZ	81349	M43436/3-1	BAND,MARKER........................	51
21	PAOZZ	19207	8338564	TERMINAL ASSEMBLY..................	6
22	PAOZZ	19207	8338562	INSULATOR,BUSHING..................	6
23	PAOZZ	19207	8338561	SHELL ELECTRICAL CO................	5
24	MOOZZ	81349	M13486/1-3AR	WIRE,ELECTRICAL MAKE FROM ELECTRICAL WIRE,P/N M13486/1-3......	V
25	PAOZZ	96906	MS20659-102	TERMINAL,LUG.......................	1
26	PAOZZ	19207	7728779	TERMINAL,LUG.......................	1
27	PAOZZ	19207	8724494	SHELL..............................	1
28	PAFZZ	96906	MS21333-125	CLAMP,LOOP.........................	3
29	PAFZZ	96906	MS3456W22-14P	CONNECTOR,PLUG,ELEC................	1
30	MFFZZ	19207	8724762AR	NONMETALLIC ROD MAKE FROM NONMETALLIC ROD,P/N 8724762.........	V
31	PAOZZ	81349	M43436/1-3	BAND,MARKER........................	9
32	PAFZZ	96906	MS3456W36-9S	CONNECTOR,PLUG,ELEC................	1
33	MFFZZ	19207	8724763AR	NONMETALLIC ROD MAKE FROM NONMETALLIC ROD,P/N 8724763.........	V
34	MFFZZ	19207	8724764AR	NONMEATLLIC ROD MAKE FROM NONMETALLIC ROD,P/N 8724764.........	V

END OF FIGURE

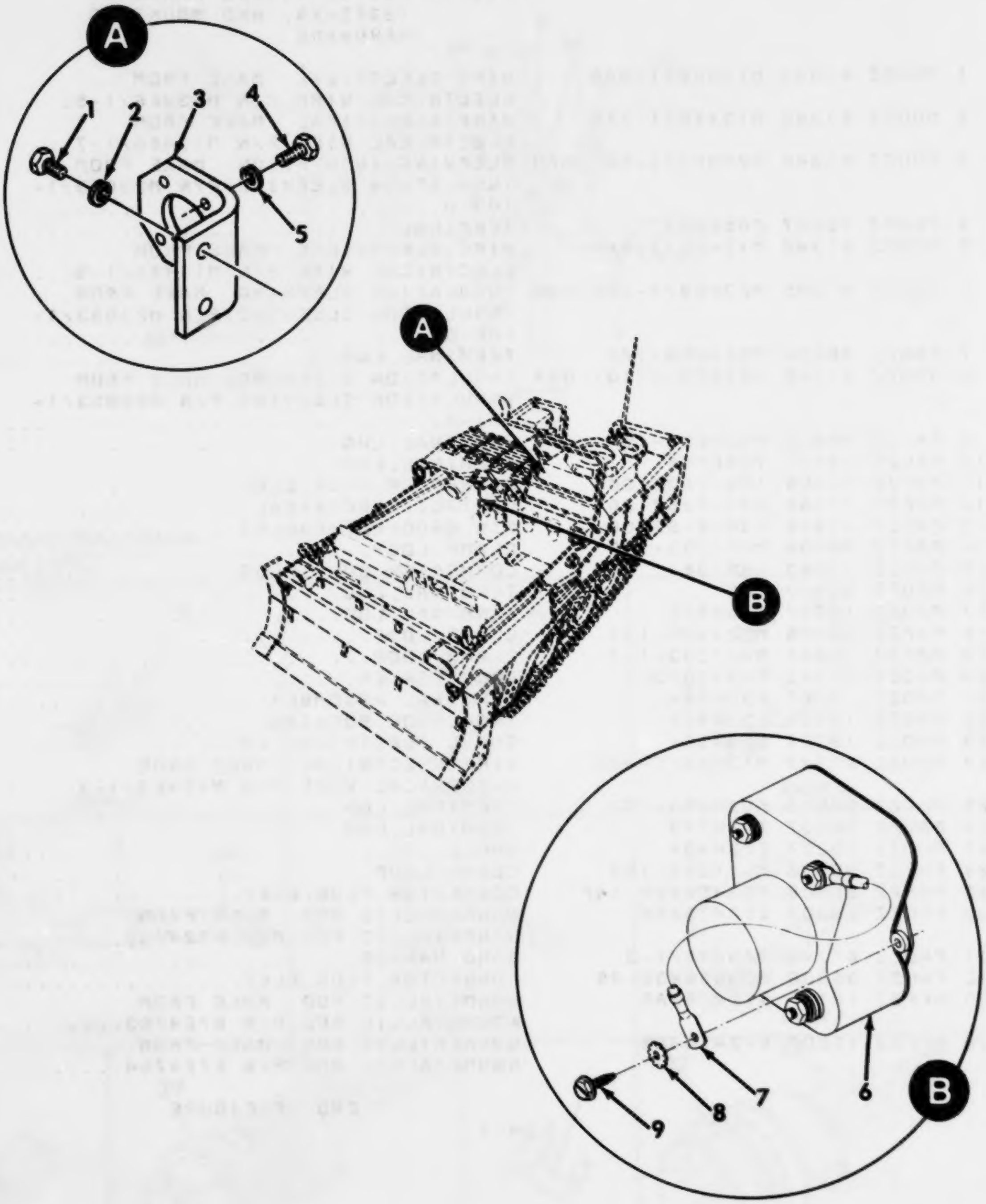

Figure 35. Engine Wiring Harness Mounting Bracket and Starter Relay.

(1) ITEM NO	(2) SMR CODE	(3) CAGEC	(4) PART NUMBER	(5) DESCRIPTION AND USABLE ON CODES(UOC)	(6) QTY
				GROUP AJ: ELECTRICAL INSTALLATION FIG.35 ENGINE WIRING HARNESS MOUNTING BRACKET AND STARTER RELAY	
1	PAFZZ	96906	MS90725-3	SCREW,CAP,HEXAGON H	2
2	PAFZZ	02614	N405P41B6	WASHER,LOCK	2
3	PFFZZ	19207	12332156	BRACKET,ANGLE	1
4	PAFZZ	96906	MS16995-18	SCREW,CAP,SOCKET HE	4
5	PAFZZ	96906	MS35333-37	WASHER,LOCK	4
6	PAOZZ	96906	MS24140-D1	RELAY,ELECTROMAGNET STARTER	1
7	PAOZZ	97403	13214E2702	LEAD,ELECTRICAL	1
8	PAOZZ	96906	MS35335-32	WASHER,LOCK	2
9	PAOZZ	96906	MS51851-64	SCREW,TAPPING,THREA	2

END OF FIGURE

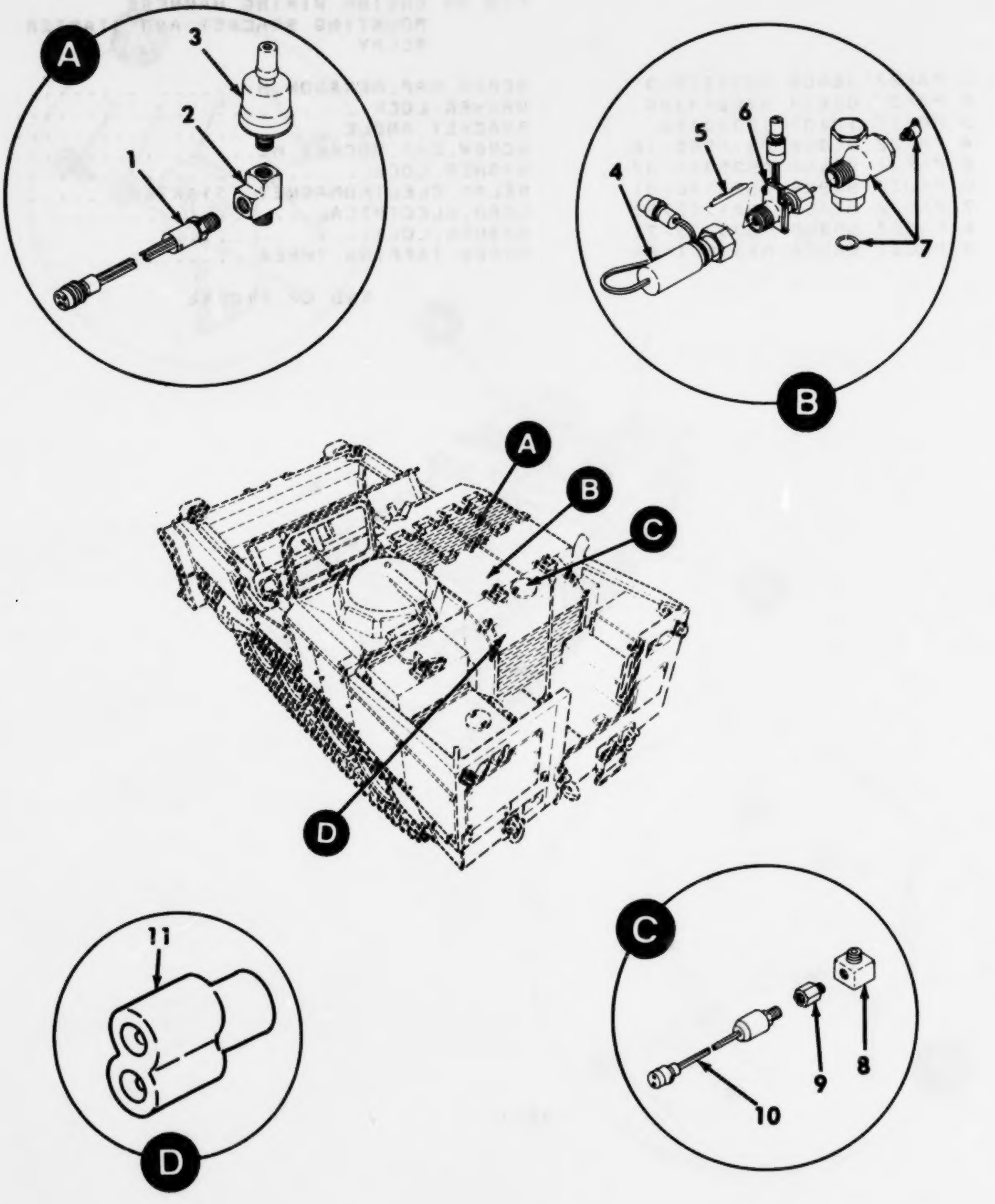

Figure 36. Engine Wiring Harness Sending Units and Connector.

(1) ITEM NO	(2) SMR CODE	(3) CAGEC	(4) PART NUMBER	(5) DESCRIPTION AND USABLE ON CODES(UOC)	(6) QTY
				GROUP AJ: ELECTRICAL INSTALLLATION FIG.36 ENGINE WIRING HARNESS SENDING UNITS AND CONNECTOR	
1	PAOZZ	09049	607GM531	SWITCH,PRESSURE ENGINE LOW OIL PRESSURE...........................	1
2	PAOZZ	81343	4-4-4 140424C	TEE,PIPE...........................	1
3	PAOZZ	96906	MS24539	TRANSMITTER,PRESSUR ENG OIL PRESSURE...........................	1
4	PAOZZ	06046	SG202-48006	GENERATOR,TACHOMETE SENDING UNIT...	1
5	PAOZZ	06046	029-20541	SHAFT,DRIVE,TACHOME................	1
6	PAOZZ	19207	12258931-1	TACHOMETER,MECHANIC STE/ICE PULSE TACH...........................	1
7	PAOZZ	97403	13214E2830	ADAPTER,SPEEDOMETER................	1
8	PAOZZ	88044	AN914-1S	ELBOW,PIPE...........................	1
9	PAOZZ	19207	12325823	REDUCER,PIPE...........................	1
10	PAOZZ	19207	12258932-7	TRANSDUCER,MOTIONAL STE/ICE FUEL PRESSURE...........................	1
11	PAOZZ	96906	MS27147-1	ADAPTER,CONNECTOR...................	1

END OF FIGURE

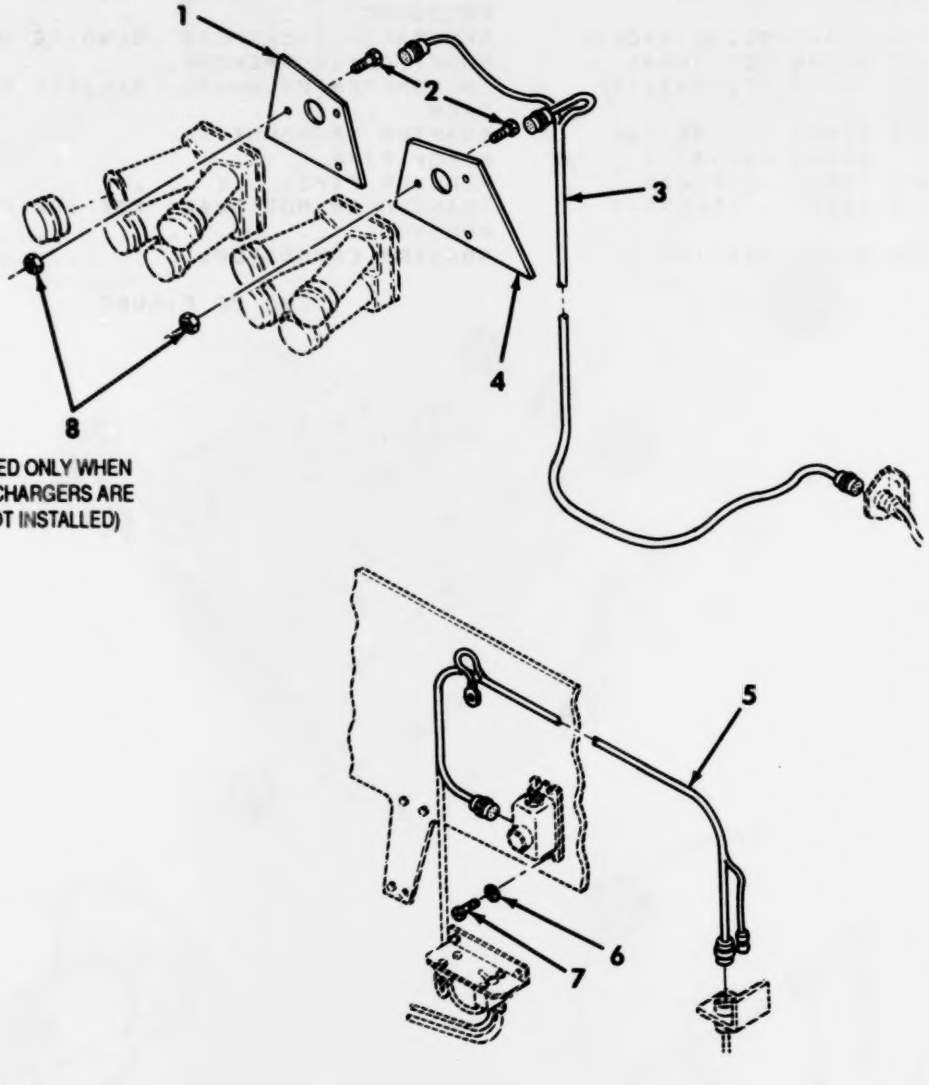

Figure 37. Smoke Grenade Launcher Wiring Harness Installation.

(1) ITEM NO	(2) SMR CODE	(3) CAGEC	(4) PART NUMBER	(5) DESCRIPTION AND USABLE ON CODES(UOC)	(6) QTY
				GROUP AJ: ELECTRICAL INSTALLATION FIG.37 SMOKE GRENADE LAUNCHER WIRING HARNESS INSTALLATION	
1	PFOZZ	19207	12332361	ARMOR PLATE..........................	1
2	PAOZZ	96906	MS90727-63L	BOLT,SELF-LOCKING....................	6
3	PAOOO	19207	12325765	WIRING HARNESS,BRAN DISCHARGER,SEE FIGURE 38 FOR PARTS BREAKDOWN.......	1
4	PFOZZ	19207	12332360	ARMOR PLATE..........................	1
5	PAOOO	19207	12325747	WIRING HARNESS,BRAN ARMING/FIRING UNIT,SEE FIGURE 39 FOR PARTS BREAKDOWN..........................	1
6	PAOZZ	96906	MS35335-32	WASHER,LOCK..........................	4
7	PAOZZ	96906	MS35206-265	SCREW,MACHINE........................	4
8	PAOZZ	96906	MS35691-21	NUT,PLAIN,HEXAGON....................	6

END OF FIGURE

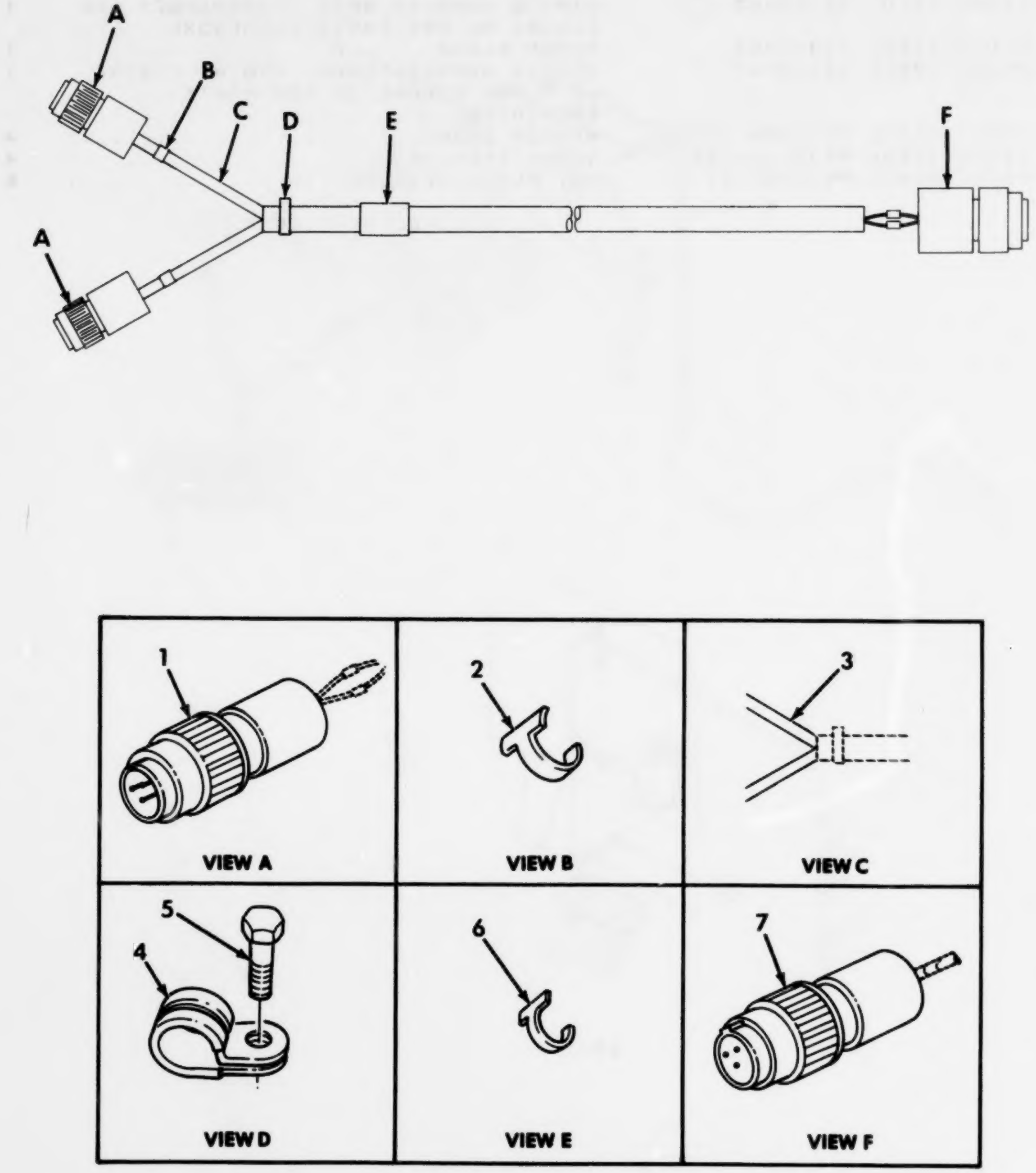

Figure 38. Discharger Wiring Harness, 12325765, and Mounting Hardware.

(1) ITEM NO	(2) SMR CODE	(3) CAGEC	(4) PART NUMBER	(5) DESCRIPTION AND USABLE ON CODES(UOC)	(6) QTY
				GROUP AJ: ELECTRICAL INSTALLATION FIG.38 DISCHARGER WIRING HARNESS, 12325765, AND MOUNTING HARDWARE	
1	PAOZZ	96906	MS3106R14S7S	CONNECTOR,PLUG,ELEC.................	2
2	PAOZZ	81349	M43436/1-3	BAND,MARKER...........................	1
3	MOOZZ	81349	M13486/2-2AR	CABLE,SPECIAL PURPO MAKE FROM SPECIAL PURPOSE CABLE,P/N M13486/2-2	V
4	PAOZZ	96906	MS21333-100	CLAMP,LOOP............................	1
5	PAOZZ	96906	MS90728-1L	BOLT,SELF-LOCKING.....................	1
6	PAOZZ	81349	M43436/4-1	BAND,MARKER...........................	6
7	PAOZZ	96906	MS3456W16-10P	CONNECTOR,PLUG,ELEC...................	1

END OF FIGURE

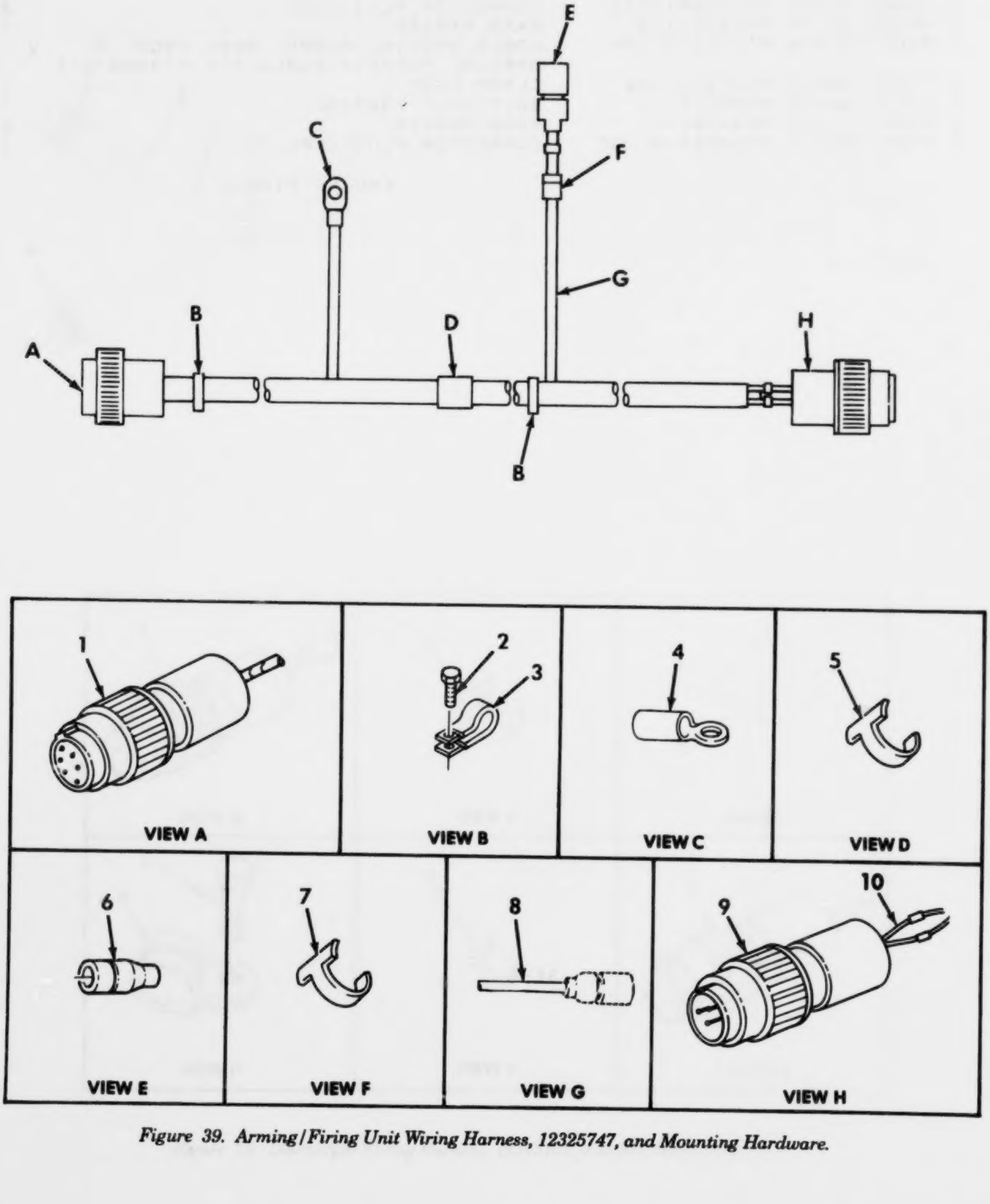

Figure 39. Arming/Firing Unit Wiring Harness, 12325747, and Mounting Hardware.

(1) ITEM NO	(2) SMR CODE	(3) CAGEC	(4) PART NUMBER	(5) DESCRIPTION AND USABLE ON CODES(UOC)	(6) QTY
				GROUP AJ: ELECTRICAL INSTALLATION FIG.39 ARMING/FIRING UNIT WIRING HARNESS, 12325747, AND MOUNTING HARDWARE	
1	PAOZZ	96906	MS3456W14S6S	CONNECTOR,PLUG,ELEC..................	1
2	PAOZZ	96906	MS90728-3L	BOLT,SELF-LOCKING..................	2
3	PAOZZ	96906	MS21333-100	CLAMP,LOOP.........................	2
4	PAOZZ	19207	7728778	TERMINAL,LUG.......................	1
5	PAOZZ	81349	M43436/4-1	BAND,MARKER........................	8
6	PAOZZ	96906	MS27144-2	CONNECTOR,PLUG,ELEC................	1
7	PAOZZ	81349	M43436/1-3	BAND MARKER........................	1
8	MOOZZ	81349	M13486/1-3AR	WIRE,ELECTRICAL MAKE FROM ELECTRICAL WIRE,P/N M13486/1-3......	V
9	PAOZZ	96906	MS3456W16-10S	CONNECTOR,PLUG,ELEC................	1
10	MOOZZ	81349	M13486/2-2AR	CABLE,SPECIAL PURPO MAKE FROM SPECIAL PURPOSE CABLE,P/N M13486/2-2	V

END OF FIGURE

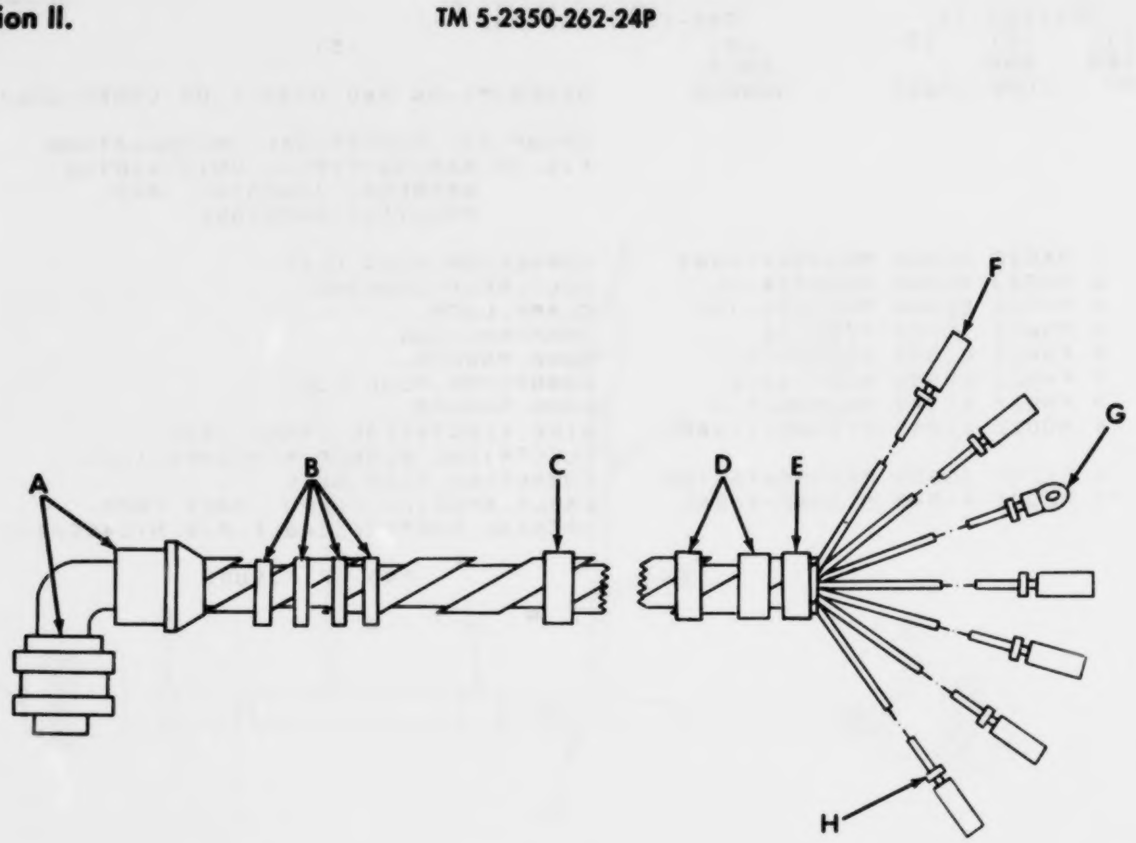

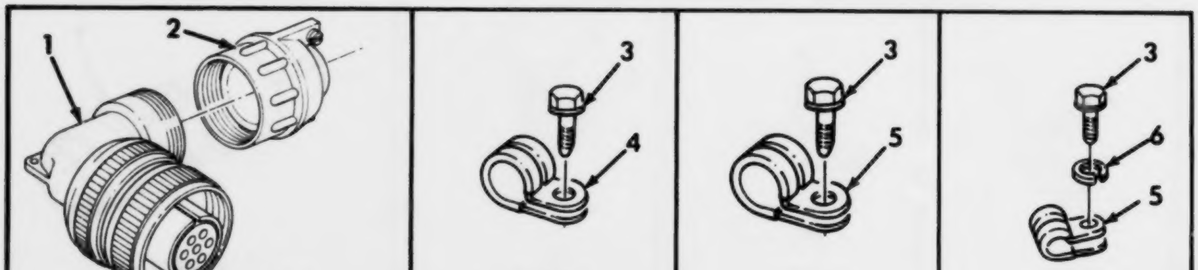

Figure 40. Hull Wiring Harness, 13214E2267, and Mounting Hardware.

(1) ITEM NO	(2) SMR CODE	(3) CAGEC	(4) PART NUMBER	(5) DESCRIPTION AND USABLE ON CODES(UOC)	(6) QTY
				GROUP AJ: ELECTRICAL INSTALLATION FIG.40 HULL WIRING HARNESS, 13214E2267, AND MOUNTING HARDWARE	
1	PAFZZ	96906	MS3108R20-15S	CONNECTOR,PLUG,ELEC..................	1
2	PAFZZ	81349	M85049/1-12B	CLAMP,CABLE,ELECTRI..................	1
3	PAOZZ	96906	MS51850-65	SCREW..................................	7
4	PAFZZ	96906	MS21333-13	CLAMP..................................	4
5	PAFZZ	96906	MS21333-75	CLAMP..................................	3
6	PAOZZ	96906	MS35335-32	WASHER.................................	2
7	PFFZZ	19207	12334763	GUARD,EXTERNAL COIL..................	1
8	MOOZZ	81349	M13486/10-1AR	CABLE,SPECIAL PURPO MAKE FROM SPECIAL PURPOSE CABLE,P/N M13486/10-1..................................	V
9	PAOZZ	81349	M43436/1-3	BAND,MARKER............................	1
10	PAOZZ	96906	MS27148-3	CONTACT................................	6
11	PAOZZ	19207	8724497	WASHER.................................	6
12	PAOZZ	19207	8724495	SHELL..................................	6
13	PAOZZ	19207	7056709	TERMINAL,LUG...........................	1
14	PAOZZ	96906	M43436/1-3	BAND,MARKER............................	7

END OF FIGURE

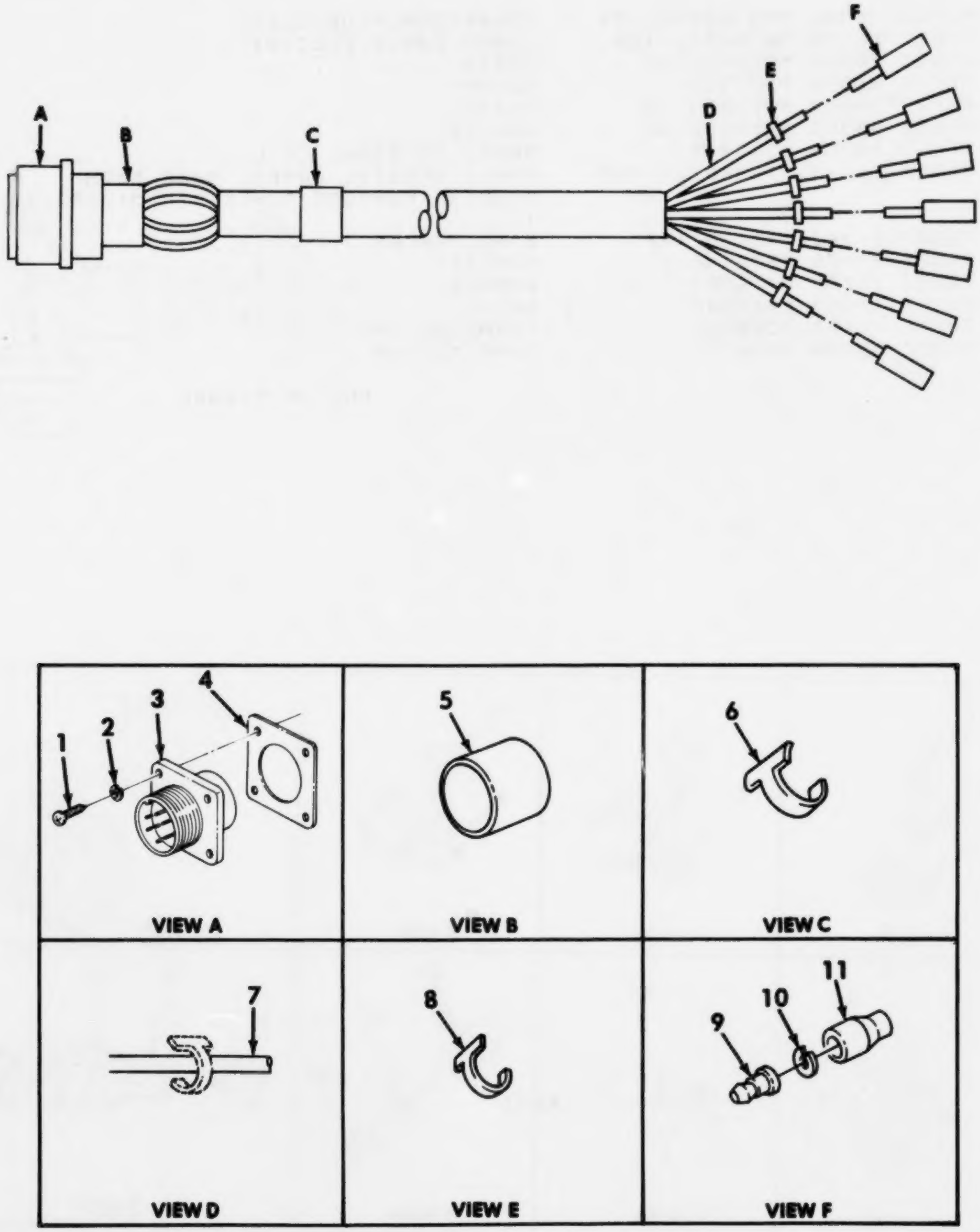

Figure 41. Apron Wiring Harness – 13214E2064.

(1) ITEM NO	(2) SMR CODE	(3) CAGEC	(4) PART NUMBER	(5) DESCRIPTION AND USABLE ON CODES(UOC)	(6) QTY
				GROUP AJ: ELECTRICAL INSTALLATION FIG.41 APRON WIRING HARNESS - 13214E2064	
1	PAOZZ	96906	MS35206-215	SCREW,MACHINE........................	4
2	PAOZZ	96906	MS35338-40	WASHER,LOCK..........................	4
3	PAOZZ	96906	MS3102R20-15P	CONNECTOR............................	1
4	PAOZZ	97403	13214E2582	GASKET...............................	1
5	MOOZZ	81349	M23053/1-201-0AR	INSULATION SLEEVING MAKE FROM INSULATION SLEEVING,P/N M23053/1-201-0...........................	V
6	PAOZZ	81349	M43436/1-3	BAND,MARKER..........................	1
7	MOOZZ	81349	M13486/1-5AR	WIRE,ELECTRICAL MAKE FROM ELECTRICAL WIRE, P/N M13486/1-5.....	V
8	PAOZZ	81349	M43436/4-1	BAND MARKER..........................	14
9	PAOZZ	96906	MS27148-2	CONTACT ELECTRICAL...................	7
10	PAOZZ	19207	8338567	WASHER,FLAT..........................	7
11	PAOZZ	19207	8338566	SHELL,ELECTRICAL,CO..................	7

END OF FIGURE

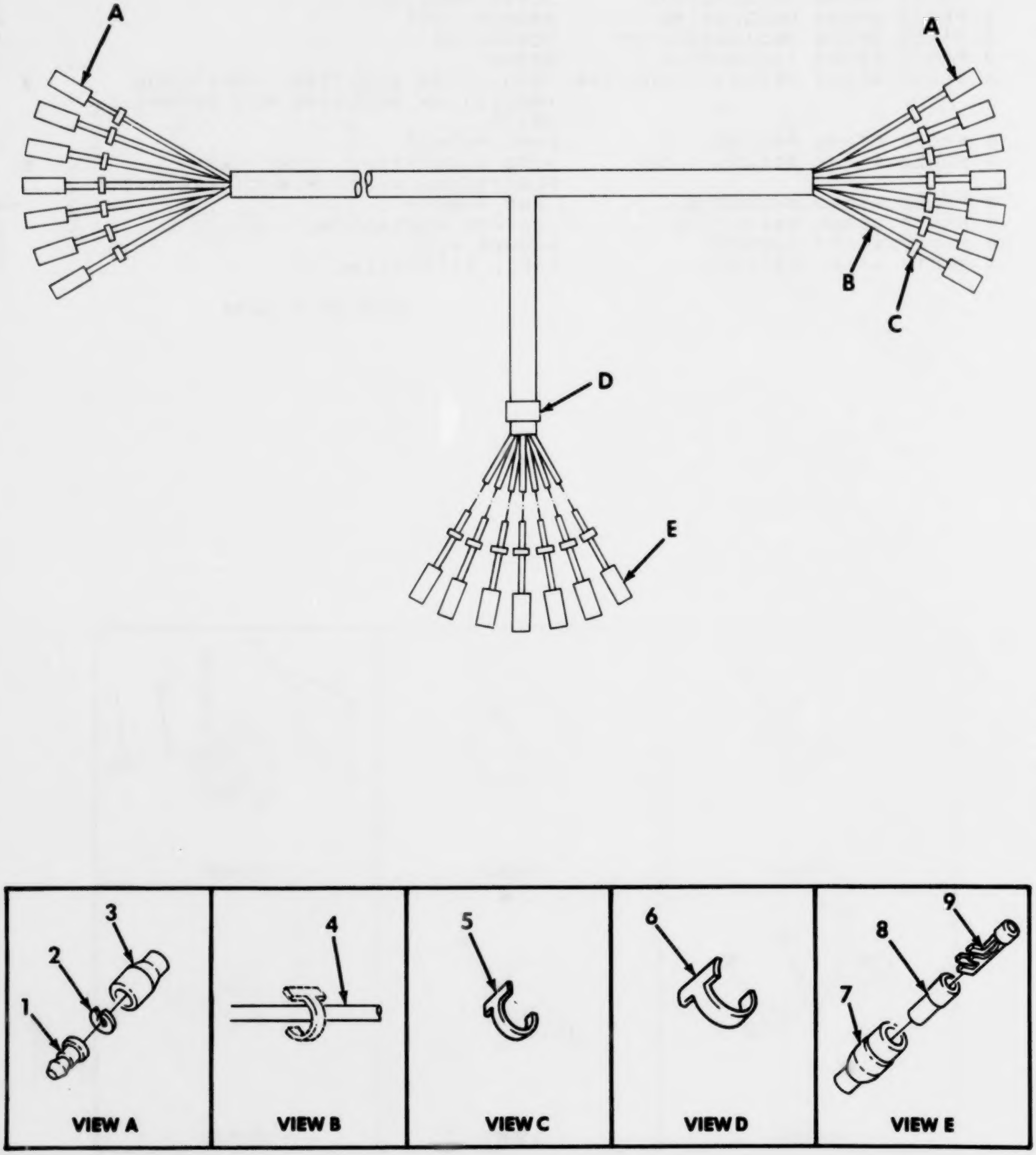

Figure 42. Headlight Wiring Harness – 13211E9059.

(1) ITEM NO	(2) SMR CODE	(3) CAGEC	(4) PART NUMBER	(5) DESCRIPTION AND USABLE ON CODES(UOC)	(6) QTY
				GROUP AJ: ELECTRICAL INSTALLATION FIG.42 HEADLIGHT WIRING HARNESS - 13211E9059	
1	PAOZZ	96906	MS27148-2	CONTACT,ELECTRICAL	14
2	PAOZZ	19207	8338567	WASHER,FLAT	14
3	PAOZZ	19207	8338566	SHELL,ELECTRICAL,CO	14
4	MOOZZ	81349	M13486/1-5AR	WIRE ELECTRICAL MARE FROM ELECTRICAL WIRE,P/N M13486/1-5	V
5	PAOZZ	81349	M43436/4-1	BAND,MARKER	21
6	PAOZZ	81349	M43436/1-3	BAND,MARKER	1
7	PAOZZ	19207	8338561	SHELL ELECTRICAL,CO	7
8	PAOZZ	19207	8338562	INSULATOR BUSHING	7
9	PAOZZ	19207	8338564	TERMINAL,ASSEMBLY	7

END OF FIGURE

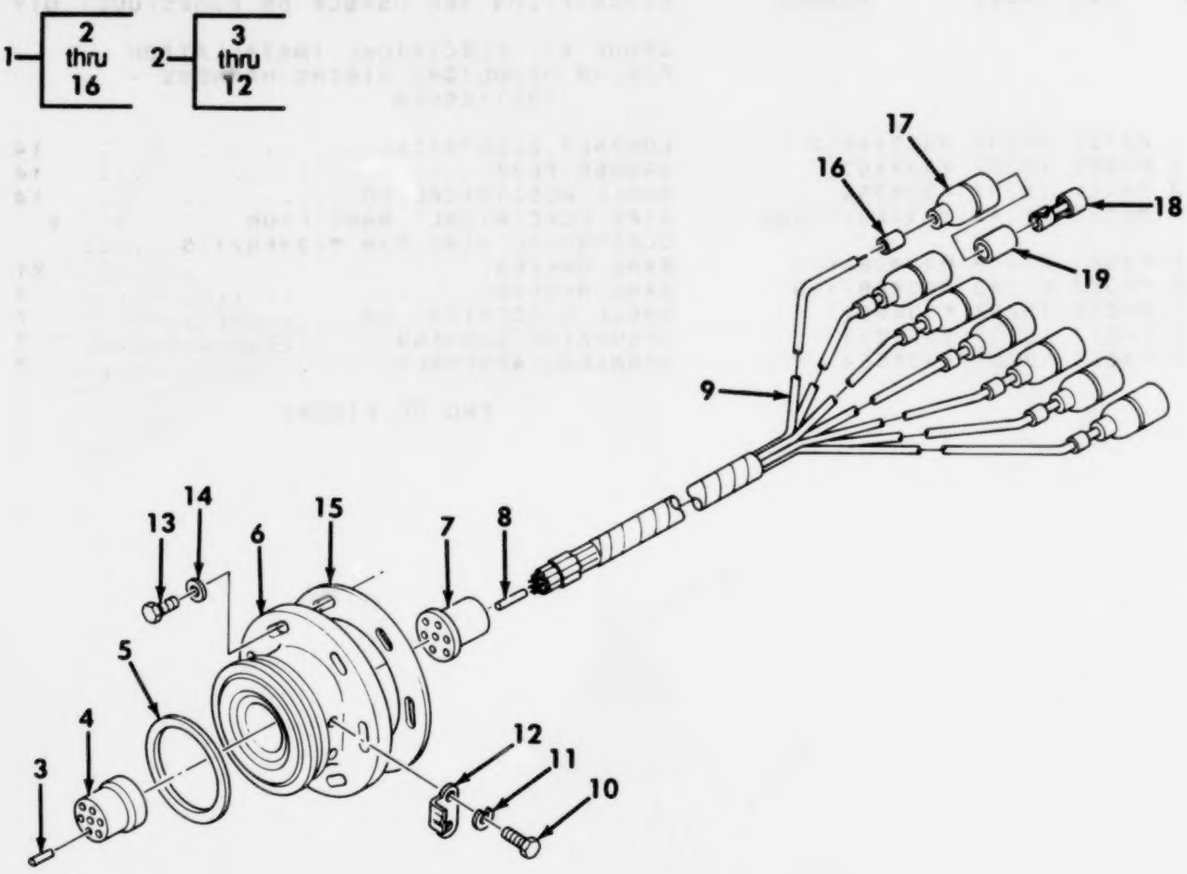

Figure 43. Headlight Base Assembly.

(1) ITEM NO	(2) SMR CODE	(3) CAGEC	(4) PART NUMBER	(5) DESCRIPTION AND USABLE ON CODES(UOC)	(6) QTY
				GROUP AJ: ELECTRICAL INSTALLATION FIG.43 HEADLIGHT BASE ASSEMBLY	
1	PFFFF	97403	13214E2944	BASE ASSEMBLY,HEADL..................	2
2	PFFFF	19207	11592745	.BASE ASSEMBLY HEAD..................	1
3	PFFZA	77820	10-33644	..CONTACT,ELECTRICAL.................	7
4	PFFZZ	19207	7722322	..BUSHING,RUBBER.....................	1
5	PAOZZ	19207	7972333	..SEAL,NONMETALLIC SP................	1
6	XAFZZ	19207	11592847	..BASE,THREADED......................	1
7	PAFZZ	19207	7723475	..INSERT,ELECTRICAL C................	1
8	PAFZZ	19207	7064704	..PIN,STRAIGHT,HEADLE...............	V
9	MFFZZ	81349	M13486/1-5AR	..WIRE,ELECTRICAL MAKE FROM ELECTRICAL WIRE,P/N M13486/1-5......	V
10	PAOZZ	96906	MS35206-226	..SCREW,MACHINE......................	2
11	PAOZZ	96906	MS35335-30	..WASHER,LOCK........................	2
12	PAOZZ	19207	7739925	..CLIP,SPRING TENSION................	1
13	PAFZZ	96906	MS90725-6	.SCREW,CAP,HEXAGON H.................	12
14	PAFZZ	96906	MS27183-10	.WASHER,FLAT.........................	12
15	PAFZZ	97403	13214E2945	.GASKET..............................	2
16	PFFZZ	81349	M43436/4-1	.BAND,MARKER.........................	7
17	PAOZZ	19207	7982401	.CONNECTOR...........................	7
18	PAOZZ	19207	8338564	.TERMINAL ASSEMBLY...................	7
19	PAOZZ	19207	8338562	.INSULATOR,BUSHING...................	7

END OF FIGURE

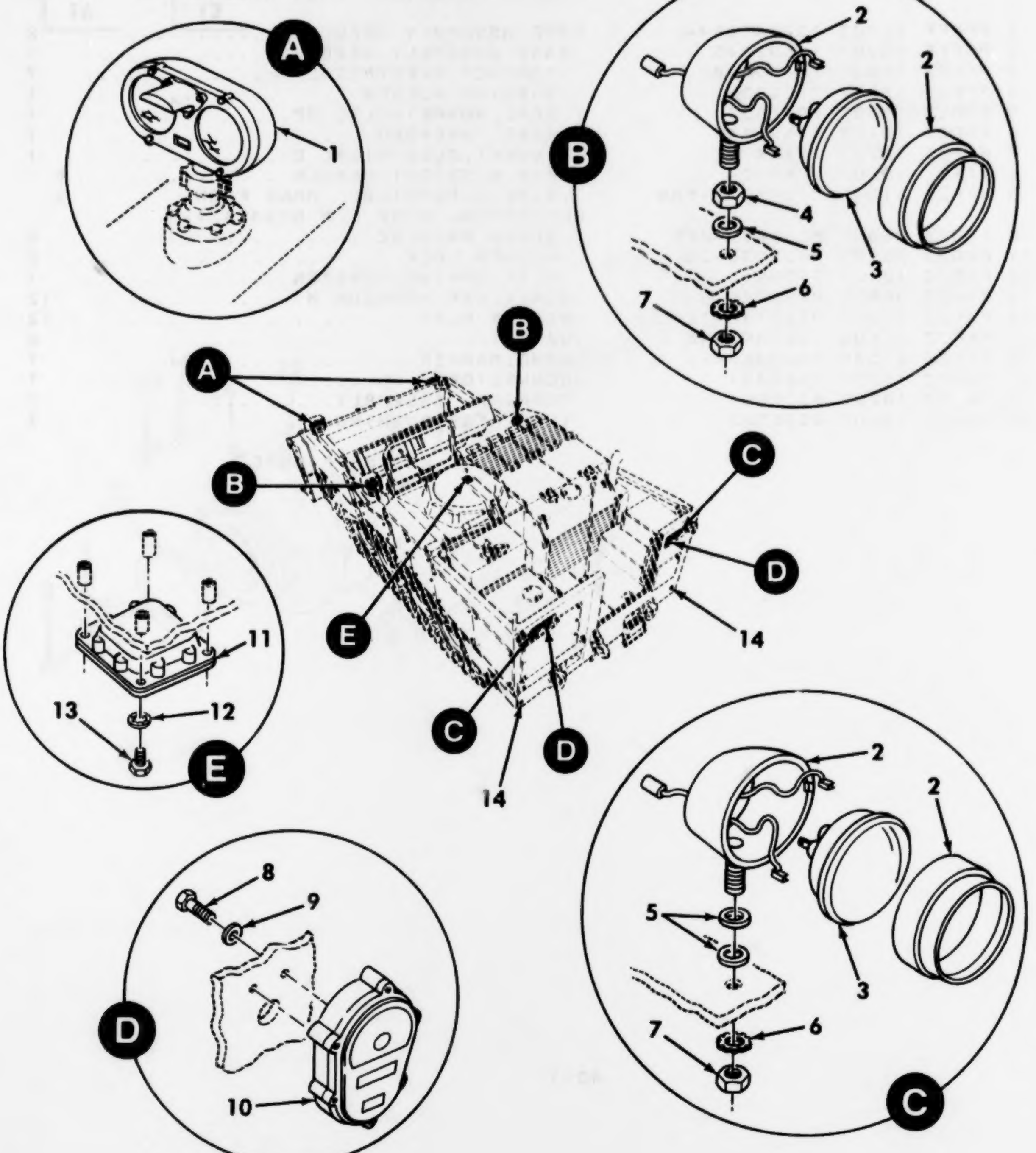

Figure 44. Headlight, Stoplight – Taillight, Domelight, and Floodlights Installation.

(1) ITEM NO	(2) SMR CODE	(3) CAGEC	(4) PART NUMBER	(5) DESCRIPTION AND USABLE ON CODES(UOC)	(6) QTY
				GROUP AJ: ELECTRICAL INSTALLATION FIG.44 HEADLIGHT, STOPLIGHT-TAILLIGHT, DOMELIGHT, AND FLOODLIGHTS INSTALLATION	
1	PAOOO	96906	MS53022-1	HEADLIGHT ASSEMBLY	2
2	PAOZZ	74400	M13158	HEADLIGHT	4
3	PAOZZ	96906	MS17165-4578	LAMP, INCANDESCENT	4
4	PAOZZ	96906	MS51968-20	NUT, PLAIN, HEXAGON	2
5	PAOZZ	96906	MS27183-21	WASHER, FLAT	6
6	PAOZZ	96906	MS35335-39	WASHER, LOCK	4
7	PAOZZ	96906	MS51922-53	NUT, SELF-LOCKING, HE	4
8	PAOZZ	96906	MS18154-60	SCREW, CAP, HEXAGON H	4
9	PAOZZ	96906	MS35335-35	WASHER, LOCK	4
10	PAOOO	19728	E019522	STOP LIGHT-TAILLIGH SEE FIGURE 46 FOR PARTS BREAKDOWN	2
11	PFOOO	96906	MS51073-1	LIGHT, DOME SEE FIGURE 47 FOR PARTS BREAKDOWN	1
12	PAOZZ	96906	MS35333-40	WASHER, LOCK	4
13	PAOZZ	96906	MS90725-6	SCREW, CAP, HEXAGON H	4
14	PAOZZ	19207	11614174-1	REFLECTOR, INDICATIN	2

END OF FIGURE

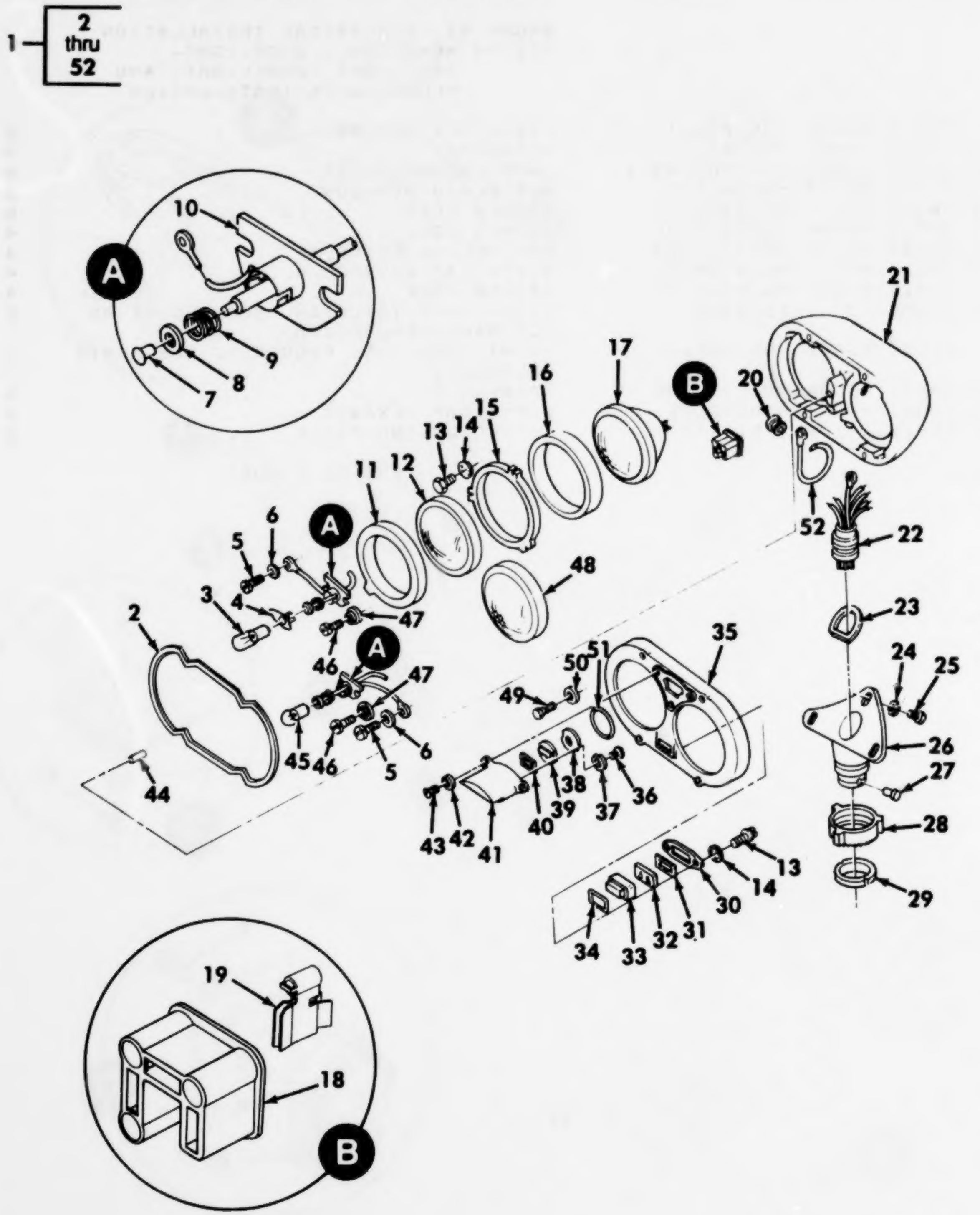

Figure 45. Headlight Assembly – MS53022-1.

(1) ITEM NO	(2) SMR CODE	(3) CAGEC	(4) PART NUMBER	(5) DESCRIPTION AND USABLE ON CODES(UOC)	(6) QTY
				GROUP AJ: ELECTRICAL INSTALLATION FIG.45 HEADLIGHT ASSEMBLY- MS53022-1	
1	PAOOO	19207	10922309	HEADLIGHT..........................	2
2	PAOZZ	19207	7972350	.SEAL,NONMETALLIC RO...............	1
3	PAOZZ	96906	MS35478-1683	.LAMP,INCANDESCENT.................	1
4	PAOZZ	19207	8744399	.REFLECTOR,LIGHT...................	1
5	PAOZZ	29092	5R327-1	.SCREW,ASSEMBLED WAS...............	2
6	PAOZZ	96906	MS35335-30	.WASHER,LOCK.......................	2
7	PAOZZ	19207	8386470	.RIVET,TUBULAR (CONTACT)...........	2
8	PAOZZ	19207	7354530	.WASHER,FLAT.......................	4
9	PAOZZ	19207	7729800	.SPRING,HELICAL,COMP...............	2
10	PAOZZ	19207	7972339	.SOCKET ASSEMBLY,HEA...............	2
11	PAOZZ	19207	7972345	.GASKET............................	2
12	PAOZZ	19207	7962266	.LENS,LIGHT........................	1
13	PAOZZ	21450	420494	.SCREW,ASSEMBLED WAS...............	8
14	PAOZZ	96906	MS35333-38	.WASHER,LOCK.......................	8
15	PAOZZ	19207	7972337	.RETAINER,LENS.....................	2
16	PAOZZ	19207	7972346	.GASKET............................	2
17	PAOZZ	96906	MS18003-4811	.LAMP,INCANDESCENT.................	2
18	PAOZZ	96906	MS16655-1	.INSERT,ELECTRICAL C...............	2
19	PAOZZ	96906	MS16655-2	.CONNECTOR,PLUG,ELEC...............	6
20	PAOZZ	19207	7972327	.GROMMET,NONMETALLIC...............	1
21	PAOZZ	19207	7972358	.HOUSING,LIGHT.....................	1
22	PAOZZ	19207	11594253	.LEAD ASSEMBLY,ELECT...............	1
23	PAOZZ	19207	10884510	.SEAL,NONMETALLIC ST...............	1
24	PAOZZ	96906	MS45904-76	.WASHER,LOCK.......................	3
25	PAOZZ	96906	MS18154-58	.SCREW,CAP,HEXAGON H...............	3
26	PAOZZ	19207	7972354	.HOLDER............................	1
27	PAOZZ	96906	MS20613-4P4	.RIVET,SOLID.......................	1
28	PAOZZ	19207	7972351	.NUT,ADJUSTMENT....................	1
29	PAOZZ	19207	7972330	.RETAINER,LENS.....................	1
30	PAOZZ	19207	7972331	.BEZEL,INSTRUMENT MO...............	1
31	PAOZZ	19207	7972326	.SEAL,NONMETALLIC ST...............	1
32	PAOZZ	19207	7729788	.FILTER,LAMP,BLACKOU...............	1
33	PAOZZ	19207	8744290	.LENS,LIGHT........................	1
34	PAOZZ	19207	11591041	.SEAL,NONMETALLIC RO...............	2
35	PAOZZ	19207	7972359	.COVER,LAMP........................	1
36	PAOZZ	96906	MS35206-227	.SCREW,MACHINE.....................	2
37	PAOZZ	96906	MS35333-37	.WASHER,LOCK.......................	2
38	PAOZZ	19207	7972334	.RETAINER,LENS.....................	1
39	PAOZZ	19207	8744293	.LENS,LIGHT........................	1
40	PAOZZ	19207	12290671	.GASKET............................	1
41	PAOZZ	19207	7972357	.GUARD,LAMP........................	1
42	PAOZZ	96906	MS35335-31	.WASHER,LOCK.......................	3
43	PAOZZ	96906	MS35206-246	.SCREW,MACHINE.....................	3
44	PAOZZ	96906	MS16562-50	.PIN,SPRING........................	1
45	PAOZZ	96906	MS15570-1251	.LAMP,INCANDESCENT.................	1
46	PAOZZ	21450	420497	.SCREW,ASSEMBLED WAS...............	4
47	PAOZZ	19207	7526007	.EYELET,METALLIC...................	4
48	PAOZZ	19207	7962265	.LENS,LIGHT........................	1
49	PAOZZ	19207	7972328	.SCREW,EXTERNALLY RE...............	4

(1) ITEM NO	(2) SMR CODE	(3) CAGEC	(4) PART NUMBER	(5) DESCRIPTION AND USABLE ON CODES(UOC)	(6) QTY
50	PAOZZ	96906	MS35333-125	.WASHER,LOCK........................	4
51	PAOZZ	19207	7972340	.SEAL,NONMETALLIC RO................	1
52	PAOZZ	19207	8744294	.CABLE ASSEMBLY,POWE................	2

END OF FIGURE

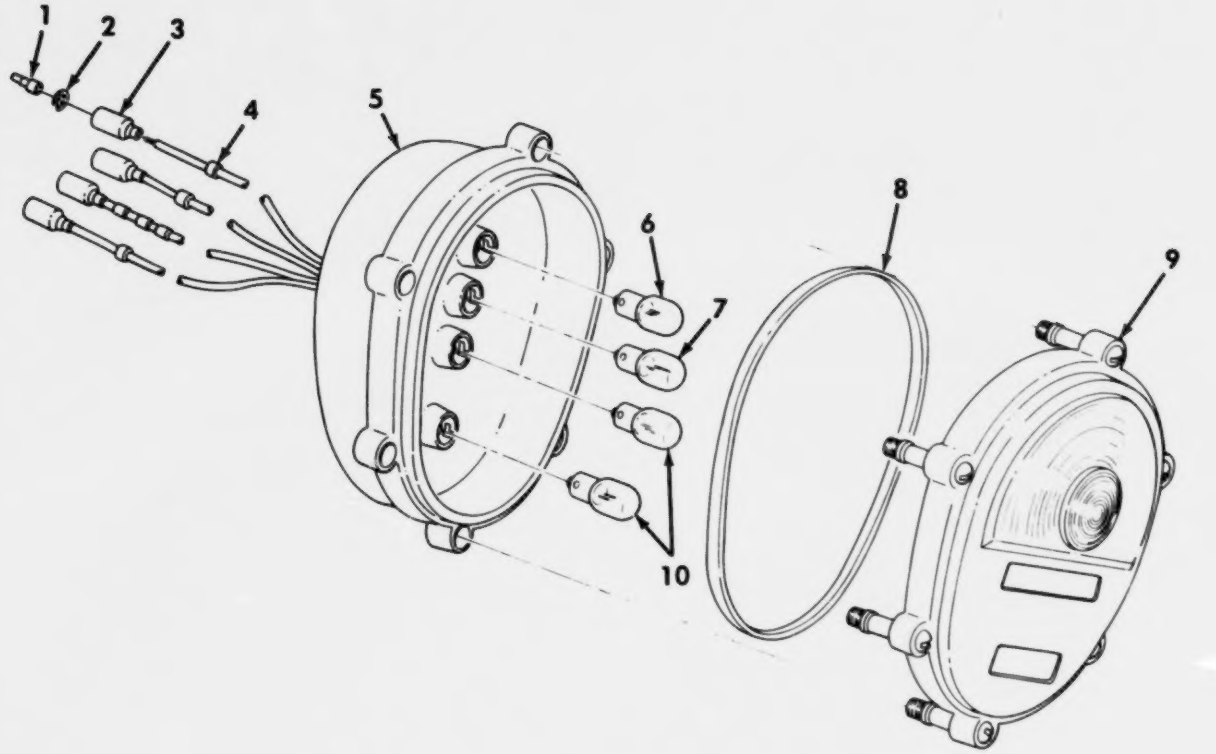

Figure 46. Stoplight – Tailight Assembly – MS52125-2.

(1) ITEM NO	(2) SMR CODE	(3) CAGEC	(4) PART NUMBER	(5) DESCRIPTION AND USABLE ON CODES(UOC)	(6) QTY
				GROUP AJ: ELECTRICAL INSTALLATION FIG.46 STOPLIGHT-TAILLIGHT ASSEMBLY- MS52125-2	
1	PAOZZ	96906	MS27148-2	CONTACT,ELECTRICAL..................	4
2	PAOZZ	19207	8338567	WASHER,SLOTTED......................	4
3	PAOZZ	19207	8338566	SHELL,ELECTRICAL CO.................	4
4	XDOZZ	81349	M43436/4-1	BAND,MARKER.........................	6
5	XAOZZ	19207	11639520	BODY ASSEMBLY.......................	1
6	PAOZZ	96906	MS15570-623	LAMP,INCANDESCENT...................	1
7	PAOZZ	96906	MS35478-1683	LAMP,INCANDESCENT...................	1
8	PAOZZ	19207	11639519-2	PACKING,PREFORMED...................	1
9	PAOZZ	19207	11639535	LENS,LIGHT..........................	1
10	PAOZZ	96906	MS15570-1251	LAMP,INCANDESCENT...................	2

END OF FIGURE

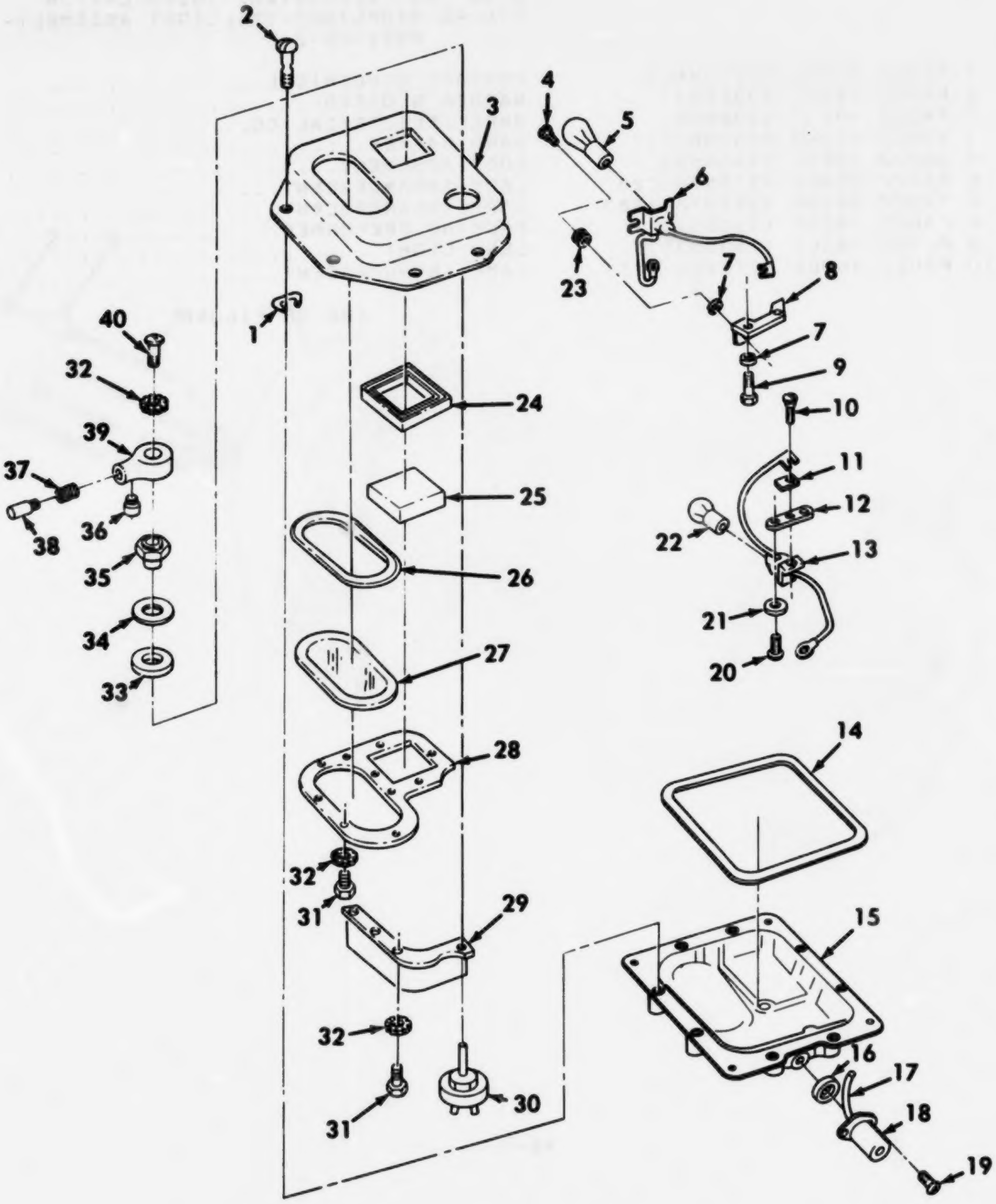

Figure 47. Domelight Assembly – MS51073-1.

GROUP AJ: ELECTRICAL INSTALLATION
FIG.47 DOMELIGHT ASSEMBLY- MS51073-1

(1) ITEM NO	(2) SMR CODE	(3) CAGEC	(4) PART NUMBER	(5) DESCRIPTION AND USABLE ON CODES(UOC)	(6) QTY
1	PAOZZ	19207	7320642	CLIP,RETAINING	8
2	PAOZZ	19207	7320641	SCREW,MACHINE	8
3	PAOZZ	19207	7962241	RETAINER,LENS	1
4	PAOZZ	19207	8335233	SCREW,SHOULDER	2
5	PAOZZ	96906	MS35478-1691	LAMP,INCANDESCENT	1
6	PAOZZ	19207	7064962	LAMPHOLDER	1
7	PAOZZ	96906	MS35338-42	WASHER,LOCK	4
8	PAOZZ	19207	7064896	PLATE,MOUNTING,LAMP	1
9	PAOZZ	96906	MS35206-242	SCREW,MACHINE	2
10	PAOZZ	19207	7320687	SCREW,SHOULDER	2
11	PAOZZ	19207	8335240	GASKET	1
12	PAOZZ	19207	8335242	PLATE,MOUNTING,LAMP	1
13	PAOZZ	19207	10942115	LAMPHOLDER	1
14	PAOZZ	19207	7962254	SEAL,NONMETALLIC RO	1
15	XAOZZ	19207	8744898	BODY,DOME LIGHT	1
16	PAOZZ	19207	7962251	PACKING,PREFORMED	1
17	PAOZZ	19207	7064899	LEAD,ELECTRICAL	1
18	PAOZZ	19207	7064961	CONNECTOR,RECEPTACL	1
19	PAOZZ	96906	MS35206-241	SCREW,MACHINE	2
20	PAOZZ	96906	MS35206-228	SCREW,MACHINE	2
21	PAOZZ	19207	8744897	WASHER,FLAT	2
22	PAOZZ	96906	MS15570-623	LAMP,INCANDESCENT	1
23	PAOZZ	19207	7064900	GROMMET,NONMETALLIC	2
24	PAOZZ	19207	12343072	GASKET	1
25	PAOZZ	19207	12314082	LENS,LIGHT	1
26	PAOZZ	19207	7962242	SEAL,NONMETALLIC ST	1
27	PAOZZ	19207	7962244	LENS,LIGHT	1
28	PAOZZ	19204	7962246	PLATE,RETAINING,WIN	1
29	PAOZZ	19207	7962247	PARTITION	1
30	PAOZZ	19207	7320651	SWITCH,ROTARY	1
31	PAOZZ	96906	MS35206-226	SCREW,MACHINE	11
32	PAOZZ	96906	MS35335-30	WASHER,LOCK	5
33	PAOZZ	19207	7320654	WASHER,FLAT	1
34	PAOZZ	19207	7320655	GASKET	1
35	PAOZZ	19207	7320652	MOUNTING NUT ASSEMB	1
36	PAOZZ	19207	7320657	SETSCREW	1
37	PAOZZ	19207	7057189	SPRING,HELICAL,COMP	1
38	PAOZZ	19207	7057187	PUSH BUTTON	1
39	PAOZZ	19207	7320656	KNOB	1
40	PAOZZ	96906	MS51957-30	SCREW,MACHINE	1

END OF FIGURE

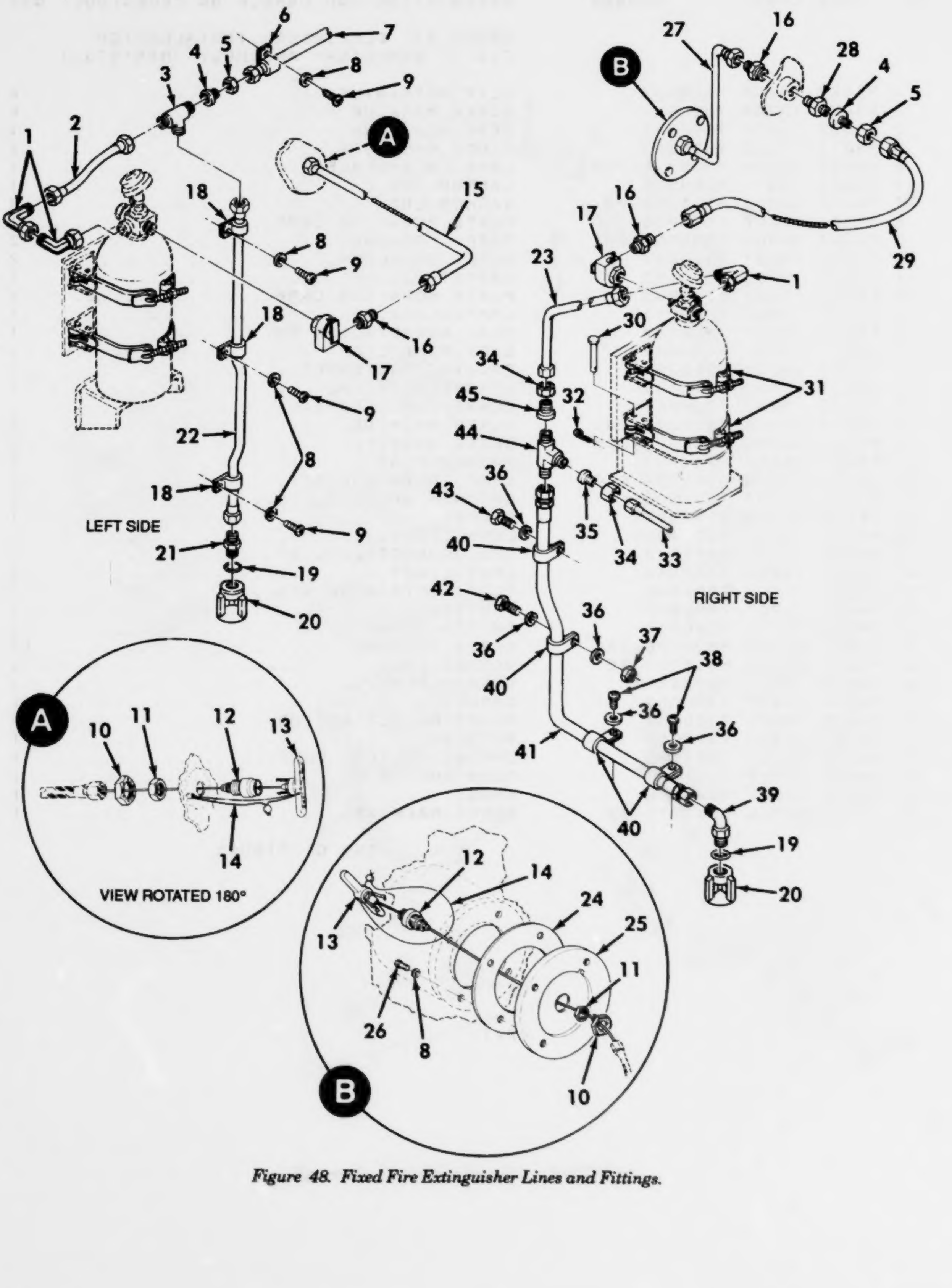

Figure 48. Fixed Fire Extinguisher Lines and Fittings.

(1) ITEM NO	(2) SMR CODE	(3) CAGEC	(4) PART NUMBER	(5) DESCRIPTION AND USABLE ON CODES(UOC)	(6) QTY
				GROUP AL: FIRE EXTINGUISHER INSTALLATION	
				FIG. 48 FIXED FIRE EXTINGUISHER LINES AND FITTINGS	
1	PAOZZ	96906	MS51521A6	ELBOW, TUBE	3
2	PAOZZ	19207	12334937	TUBE ASSEMBLY, METAL	1
3	PAOZZ	96906	MS51510A6	TEE, TUBE	1
4	PAOZZ	96906	MS51534A6-4	REDUCER, TUBE	2
5	PAOZZ	96906	MS51531-B6	NUT, TUBE COUPLING	2
6	PAOZZ	96906	MS21333-98	CLAMP, LOOP	1
7	PAOZZ	19207	12334936	TUBE ASSEMBLY, METAL	1
8	PAOZZ	96906	MS27183-10	WASHER, FLAT	8
9	PAOZZ	80064	2585164-279	SCREW, SELF-LOCKING	4
10	PAOZZ	96906	MS25082-10	NUT, PLAIN, HEXAGON	2
11	PAOZZ	96906	MS27151-28	NUT, STAMPED	2
12	PAOZZ	19207	5227606	REDUCER, TUBE	2
13	PAOZZ	19207	7968260	HANDLE, FIRE EXTINGU	2
14	PAOZZ	96906	MS51938-6	SEAL, ANTIPILFERAGE	2
15	PAOZZ	57371	C904-14	GUIDE, CABLE FIRE EX	1
16	PAOZZ	96906	MS51500A4	ADAPTER, STRAIGHT, PI	3
17	PAOZZ	19207	12307556	VALVE, FIRE EXTINGUI	2
18	PAOZZ	96906	MS21333-100	CLAMP, LOOP	3
19	PAOZZ	96906	MS28778-8	PACKING, PREFORMED	2
20	PAOZZ	80064	2588273	EXHAUST NOZZLE, FIRE	2
21	PAOZZ	96906	MS51525A6-8	ADAPTER, STRAIGHT, TU	1
22	PAOZZ	19207	12334938	TUBE ASSEMBLY, METAL	1
23	PAOZZ	19207	12355290	TUBE ASSEMBLY, METAL	1
24	PAOZZ	19207	12357165	GASKET	1
25	PFOZZ	19207	12355423	COVER, ACCESS	1
26	PAOZZ	96906	MS90728-5L	BOLT, SELF-LOCKING	4
27	PAOZZ	57371	C-904-19.5 INCH	GUIDE, CABLE FIRE EX	1
28	PAOZZ	96906	MS51500A6-6	ADAPTER, STRAIGHT, PI	1
29	PAOZZ	57371	C904-21.5	GUIDE, CABLE	1
30	PAOZZ	96906	MS20392-3C43	PIN, STRAIGHT, HEADED	8
31	PAOZZ	00624	53336	BRACKET, FIRE EXTING	4
32	PAOZZ	96906	MS24665-132	PIN, COTTER	8
33	PAOZZ	19207	12334941	TUBE ASSEMBLY, METAL	1
34	PAOZZ	96906	MS51531B8	NUT, TUBE COUPLING	2
35	PAOZZ	96906	MS51534A8-4	REDUCER, BODY TUBE	1
36	PAOZZ	96906	MS27183-12	WASHER, FLAT	5
37	PAOZZ	96906	MS21044N5	NUT, SELF-LOCKING, HE	1
38	PAOZZ	80064	2585164-296	SCREW, SELF-LOCKING	2
39	PAOZZ	96906	MS51527A8	ELBOW, TUBE TO BOSS	1
40	PAOZZ	96906	MS21333-114	CLAMP, LOOP	4
41	PAOZZ	96906	MS52103A080380R	HOSE ASSEMBLY, NONME	1
42	PAOZZ	96906	MS90727-35	BOLT, MACHINE	1
43	PAOZZ	96906	MS90728-29L	BOLT, SELF-LOCKING	1
44	PAOZZ	96906	MS51510A8	TEE, TUBE	1
45	PAOZZ	96906	MS51534A8-6	REDUCER BODY, TUBE	1

END OF FIGURE

1 — 2 thru 7

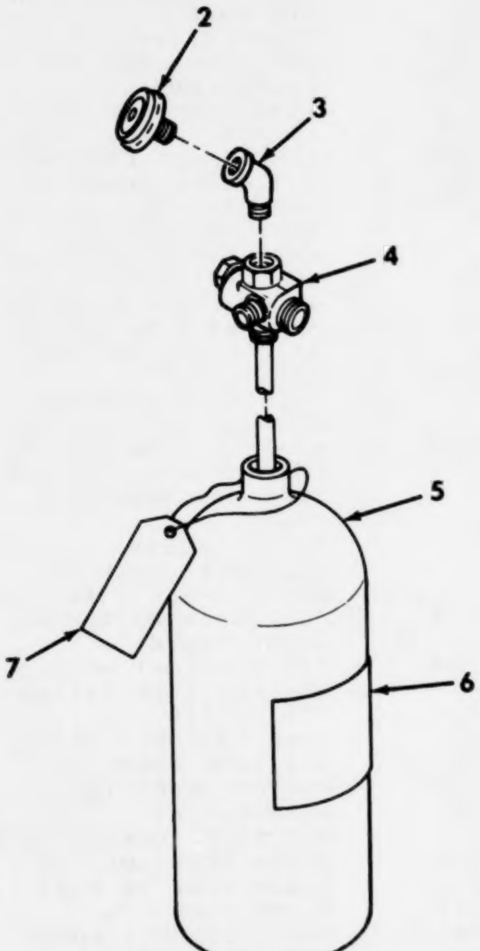

Figure 49. Fire Extinguisher Cylinder Assembly.

(1) ITEM NO	(2) SMR CODE	(3) CAGEC	(4) PART NUMBER	(5) DESCRIPTION AND USABLE ON CODES(UOC)	(6) QTY
				GROUP AL: FIRE EXTINGUISHER INSTALLATION	
				FIG.49 FIRE EXTINGUISHER CYLINDER ASSEMBLY	
1	PAOFF	19207	12297014	EXTINGUISHER,FIRE,V..................	2
2	PAFZZ	33525	282107	.GAGE,PRESSURE,DIAL.................	1
3	PAFZZ	88044	AN915-1J	.ELBOW,PIPE........................	1
4	PAFZZ	33525	878009	.VALVE,FIRE EXTINGUI................	1
5	XAFZZ	19207	12296731	.CYLINDER,COMPRESSED................	1
6	PFFZZ	19207	12296789	.PLATE,INSTRUCTION..................	1
7	PAFZZ	80064	2588282	.TAG,INSTRUCTION....................	1

END OF FIGURE

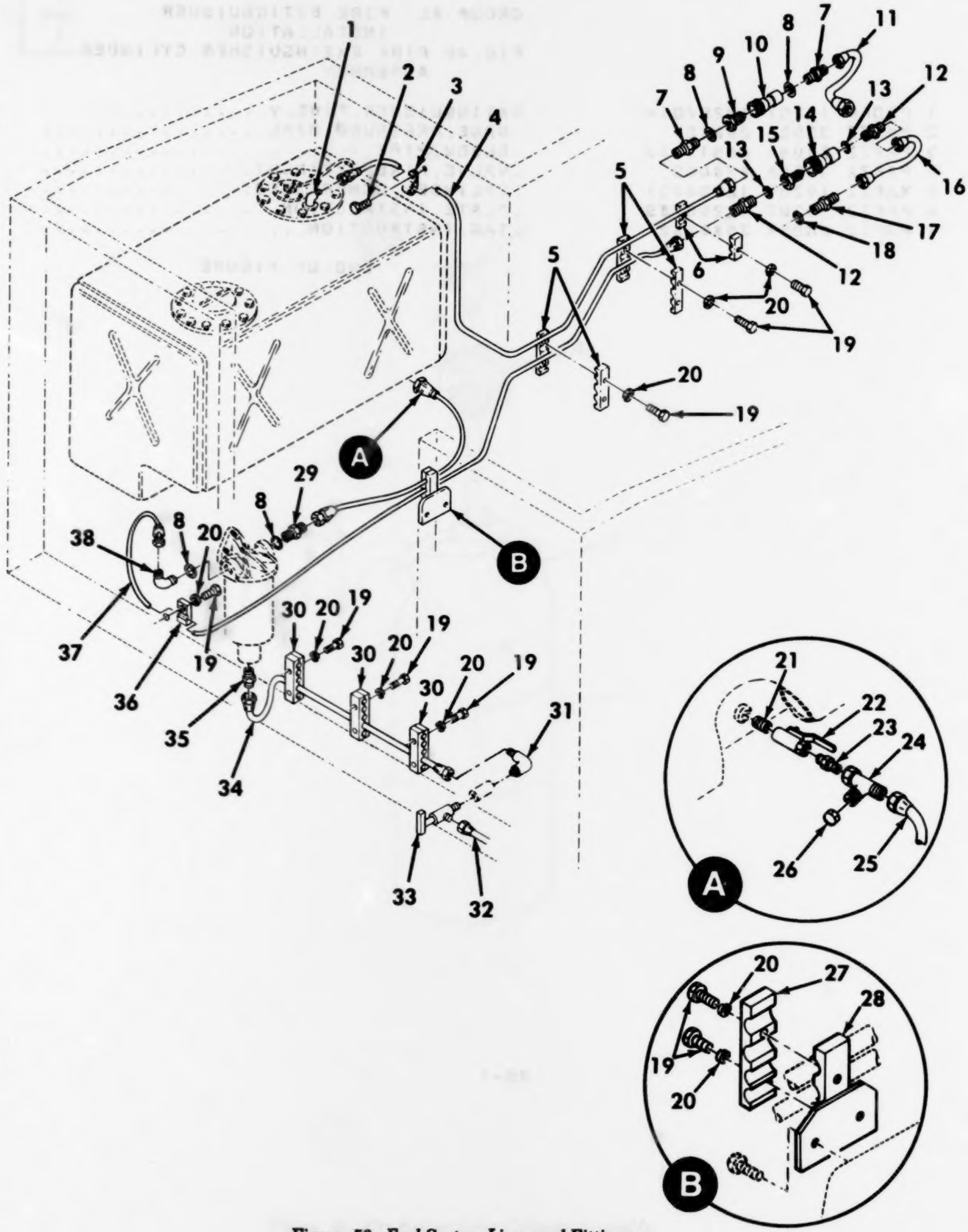

Figure 50. Fuel System Lines and Fittings.

(1) ITEM NO	(2) SMR CODE	(3) CAGEC	(4) PART NUMBER	(5) DESCRIPTION AND USABLE ON CODES(UOC)	(6) QTY
				GROUP AM: FUEL SYSTEM INSTALLATION FIG.50 FUEL SYSTEM LINES AND FITTINGS	
1	PAOZZ	96906	MS51504A8	ELBOW,PIPE TO TUBE..................	1
2	PAOZZ	96906	MS51851-65	SCREW,TAPPING,THREA..................	1
3	PAOZZ	96906	MS21333-75	CLAMP,LOOP..................	1
4	PAOZZ	96906	MS52103A08088OR	HOSE ASSEMBLY,NONME..................	1
5	PFOZZ	19207	12334993	CLAMP,BLOCK,HALF..................	2
6	PFOZZ	19207	12334994	CLAMP,SPECIAL..................	1
7	PAOZZ	96906	MS51525A8-10	ADAPTER,STRAIGHT,TU..................	2
8	PAOZZ	96906	MS28778-10	PACKING,PREFORMED..................	4
9	PAOZZ	97111	H4-63-T10	COUPLING HALF,QUICK..................	1
10	PAOZZ	97111	H4-62SL-T10	COUPLING HALF,QUICK..................	1
11	PAOZZ	96906	MS52103A08023OR	HOSE ASSEMBLY,NONME..................	1
12	PAOZZ	96906	MS51525A10-12S	ADAPTER,STRAIGHT,TU..................	2
13	PAOZZ	96906	MS28778-12	PACKING,PREFORMED..................	2
14	PAOZZ	97111	H6-63-T12	COUPLING HALF,QUICK..................	1
15	PAOZZ	97111	H6-62SL-T12	COUPLING HALF,QUICK..................	1
16	PAOZZ	96906	MS52103A10018OR	HOSE ASSEMBLY,NONME..................	1
17	PFOZZ	98441	0503-10-8	ADAPTER,STRAIGHT,TU..................	1
18	PAOZZ	96906	MS28778-8	PACKING,PREFORMED..................	1
19	PAOZZ	96906	MS90728-8	SCREW,CAP,HEXAGON H..................	14
20	PAOZZ	02614	N405P41B6	WASHER,LOCK..................	14
21	PAOZZ	96906	MS51953-11	NIPPLE,PIPE..................	1
22	PAOZZ	06853	285172	VALVE,BALL..................	1
23	PAOZZ	96906	MS51500A10	ADAPTER,STRAIGHT,PI..................	1
24	PAOZZ	96906	MS51523A10	TEE,TUBE..................	1
25	PAOZZ	96906	MS52103A10038OR	HOSE ASSEMBLY,NONME MEDIUM PRESSURE	1
26	PAOZZ	96906	MS51532B10	CAP,TUBE..................	1
27	PFOZZ	19207	12325777	CLAMP,BLOCK,HALF..................	1
28	PFOZZ	19207	12325776	CLAMP,LOOP..................	1
29	PAOZZ	96906	MS51525A10	ADAPTER,STRAIGHT,TU..................	1
30	PFOZZ	19207	12331987	CLAMP,BLOCK..................	3
31	PAOZZ	96906	MS51504A6	ELBOW,PIPE TO TUBE..................	1
32	PAOZZ	97403	13204E2551	HOSE ASSEMBLY,NONME..................	1
33	PAOZZ	30076	43883	COCK,SHUTOFF,SCREW..................	1
34	PAOZZ	96906	MS52103A06054OR	HOSE ASSEMBLY,NONME MEDIUM PRESSURE	1
35	PAOZZ	96906	MS51500A6	ADAPTER,STRAIGHT,PI..................	1
36	PFOZZ	19207	12325763	CLAMP,BLOCK..................	1
37	PAOZZ	96906	MS52103A10106OR	HOSE ASSEMBLY,NONME..................	1
38	PFOZZ	96906	MS51528A10S	ELBOW,TUBE TO BOSS..................	1

END OF FIGURE

15—16

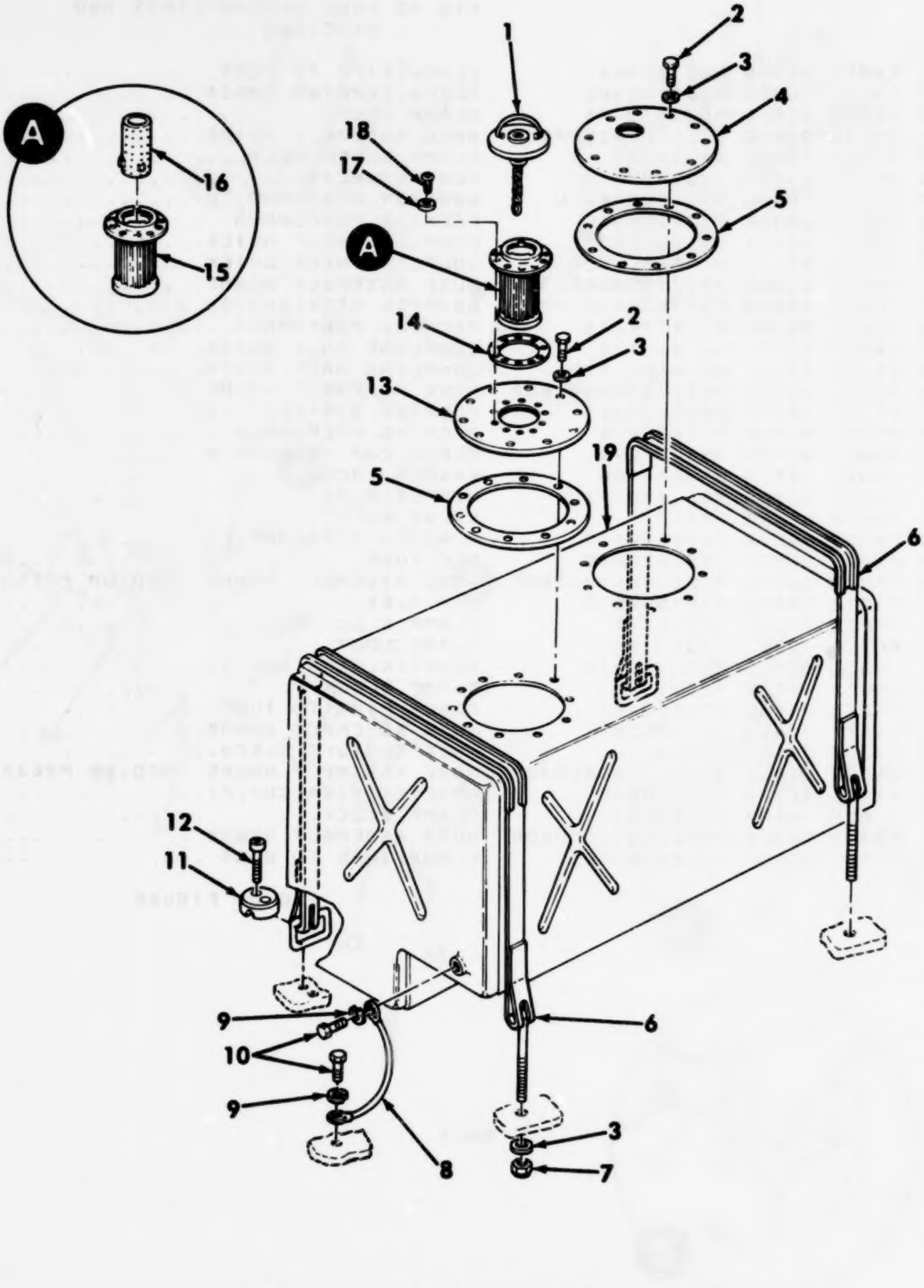

Figure 51. Fuel Tank and Related Parts.

(1) ITEM NO	(2) SMR CODE	(3) CAGEC	(4) PART NUMBER	(5) DESCRIPTION AND USABLE ON CODES(UOC)	(6) QTY
				GROUP AM: FUEL SYSTEM INSTALLATION FIG.51 FUEL TANK AND RELATED PARTS	
1	PAOZZ	96906	MS51300-1	CAP,FILLER OPENING..................	1
2	PAOZZ	96906	MS90728-62	SCREW,CAP,HEXAGON H.................	20
3	PAOZZ	96906	MS27183-14	WASHER,FLAT.........................	22
4	PFOZZ	19207	12334923	COVER,ACCESS........................	1
5	PAOZZ	19207	12332465	GASKET..............................	2
6	PAOZZ	97403	13214E1997	STRAP,FUEL TANK FUEL TANK MOUNTING.	2
7	PAOZZ	96906	MS17829-6C	NUT,SELF-LOCKING,HE.................	2
8	PAOZZ	97403	13211E9533	LEAD,ELECTRICAL GROUND.............	1
9	PAOZZ	96906	MS35335-35	WASHER,LOCK.........................	2
10	PAOZZ	96906	MS90728-55	SCREW,CAP,HEXAGON H.................	2
11	PFOZZ	97403	13214E2003	PAD,ANCHOR..........................	2
12	PAOZZ	96906	MS16997-100	SCREW,CAP,SOCKET HE.................	4
13	PFOZZ	19207	12325860	COVER,ACCESS FUEL TANK.............	1
14	PAOZZ	19207	12325859	GASKET..............................	1
15	PAOZZ	19207	12325858	FILLER NECK.........................	1
16	PAOZZ	96906	MS90908-1	.STRAINER ELEMENT,SE................	1
17	PAOZZ	96906	MS27183-8	WASHER,FLAT.........................	10
18	PAOZZ	96906	MS35206-265	SCREW,MACHINE.......................	10
19	PAOFF	19207	12325866	TANK,FUEL,ENGINE....................	1

END OF FIGURE

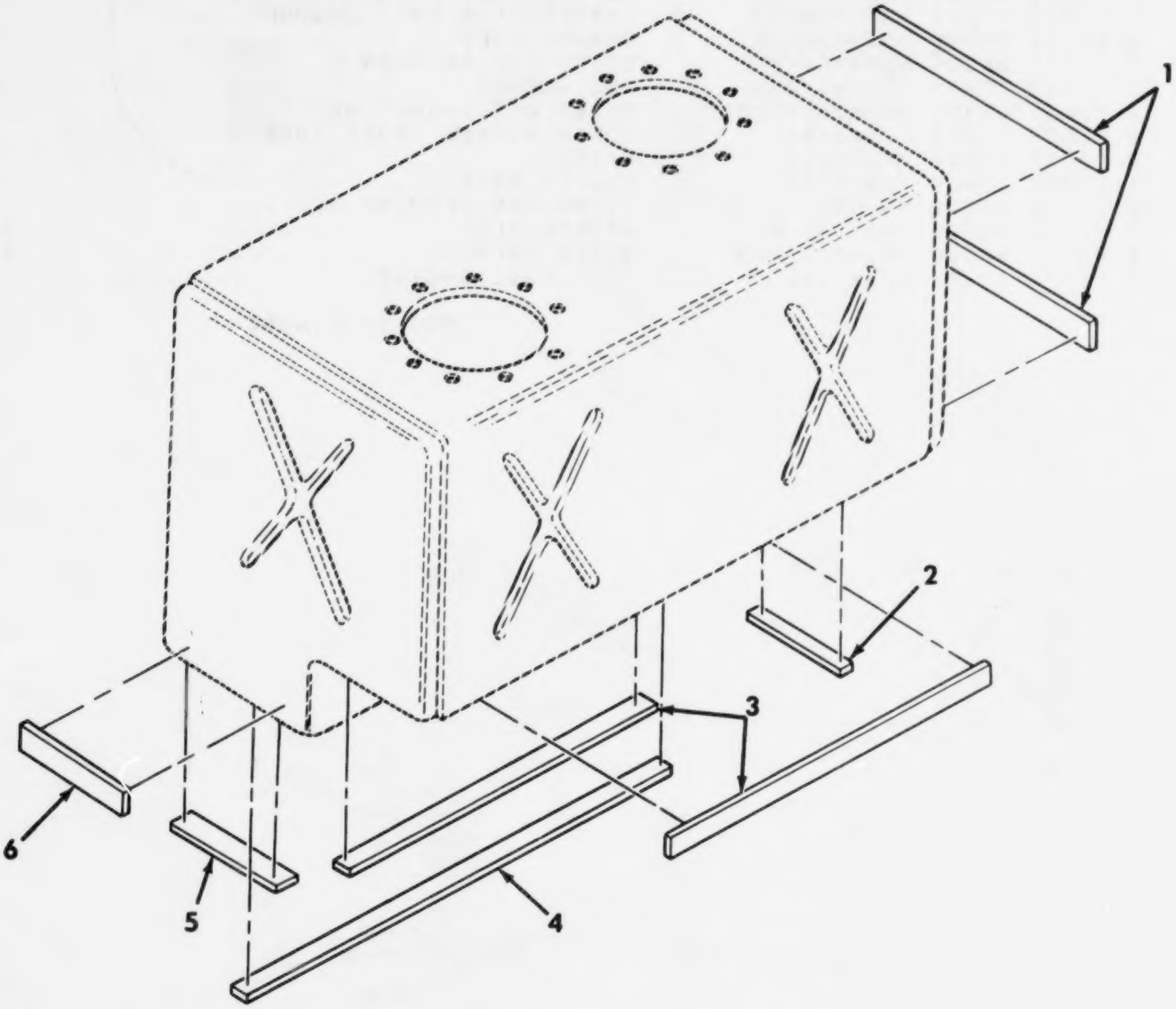

Figure 52. Fuel Tank Assembly.

(1) ITEM NO	(2) SMR CODE	(3) CAGEC	(4) PART NUMBER	(5) DESCRIPTION AND USABLE ON CODES(UOC)	(6) QTY
				GROUP AM: FUEL SYSTEM INSTALLATION FIG.52 FUEL TANK ASSEMBLY	
1	PAFZZ	19207	12325817	.RUBBER STRIP FUEL TANK............	2
2	PAFZZ	19207	12325815	.RUBBER STRIP FUEL TANK............	1
3	PAFZZ	19207	12325812	.RUBBER STRIP FUEL TANK............	2
4	PAFZZ	19207	12325813	.PAD,RUBBER FUEL TANK.............	1
5	PAFZZ	19207	12325814	.RUBBER STRIP FUEL TANK............	1
6	PAFZZ	19207	12325816	.RUBBER STRIP FUEL TANK............	1

END OF FIGURE

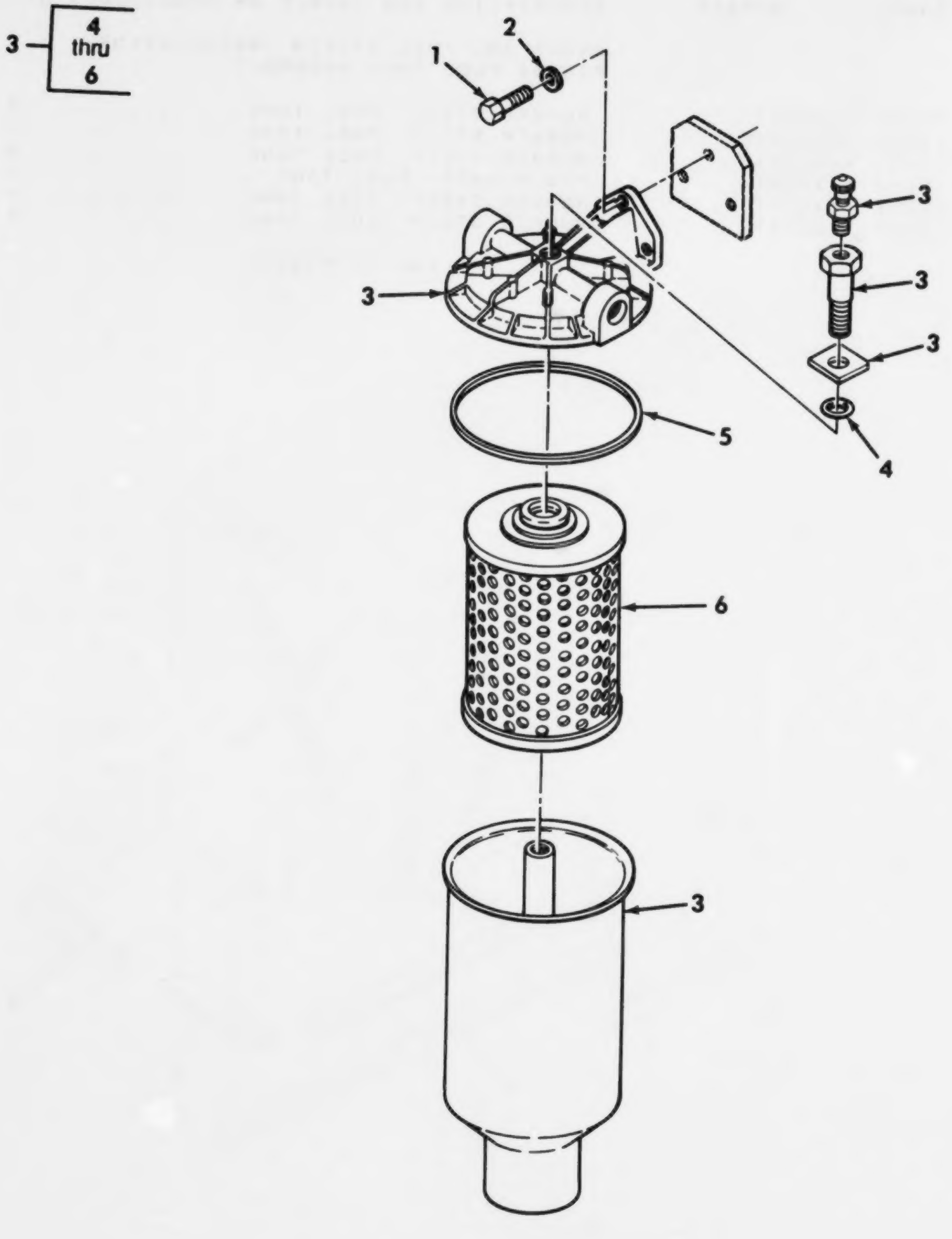

Figure 53. Fuel Filter and Mounting Parts.

(1) ITEM NO	(2) SMR CODE	(3) CAGEC	(4) PART NUMBER	(5) DESCRIPTION AND USABLE ON CODES(UOC)	(6) QTY
				GROUP AM: FUEL SYSTEM INSTALLATION FIG.53 FUEL FILTER AND MOUNTING PARTS	
1	PAOZZ	96906	MS90728-62	SCREW,CAP,HEXAGON H..................	3
2	PAOZZ	96906	MS27183-14	WASHER,FLAT.........................	3
3	PFOZZ	15434	256546	SEPARATOR,WATER,LIQ................	1
4	KFOZZ	53964	A618021	.O-RING PART OF KIT P/N SA910070 PART OF KIT P/N SA910070............	1
5	KFOZZ	53964	A619025	.GASKET PART OF KIT P/N SA910070....	1
6	KFOZZ	53964	SC220086	.FILTER ELEMENT,FLUI PART OF KIT P/N SA910070..........................	1

END OF FIGURE

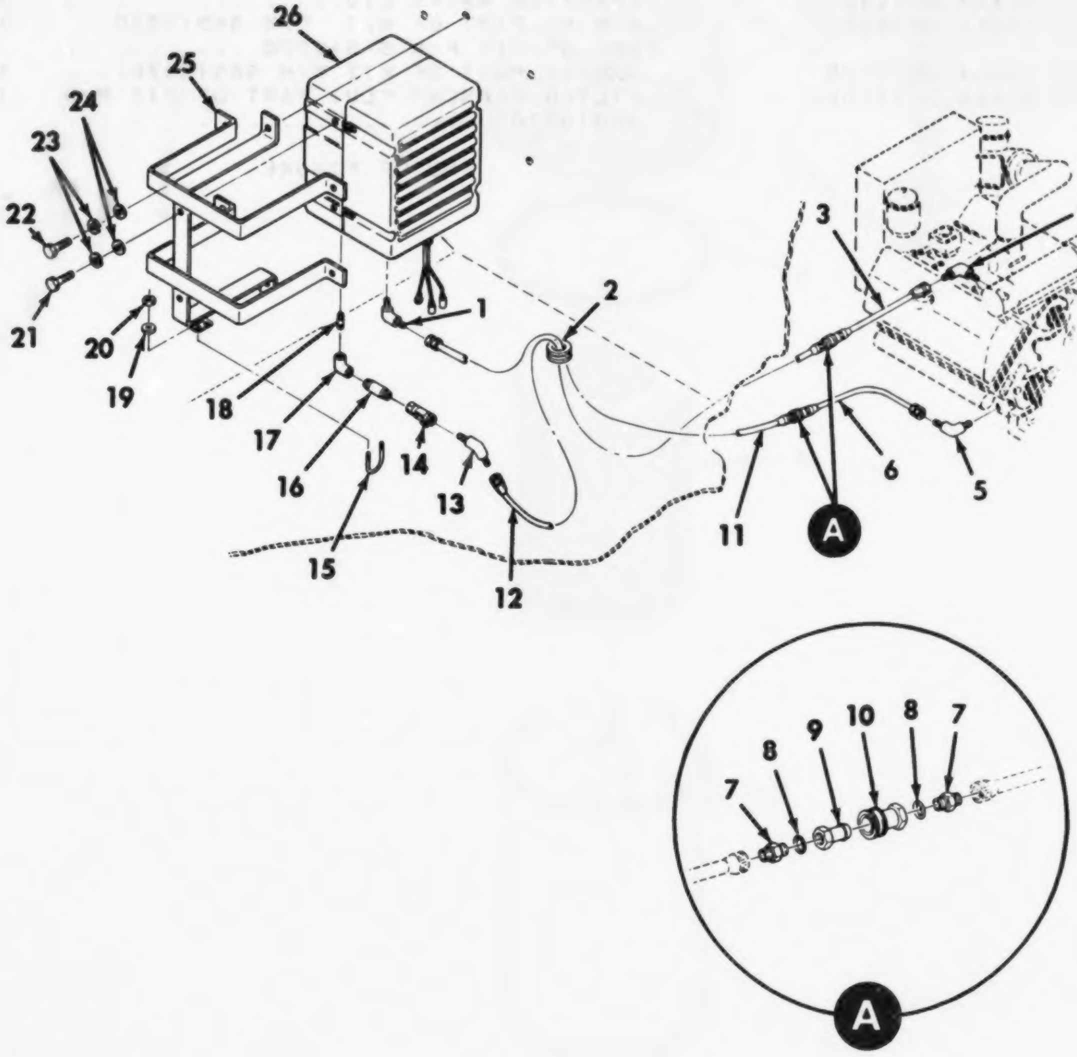

Figure 54. Heater and Ventilation Installation.

(1) ITEM NO	(2) SMR CODE	(3) CAGEC	(4) PART NUMBER	(5) DESCRIPTION AND USABLE ON CODES(UOC)	(6) QTY
				GROUP AN: HEATER AND VENTILATION INSTALLATION	
				FIG.54 HEATER AND VENTILATION INSTALLATION	
1	PAOZZ	97403	13214E2935	ELBOW,PIPE TO TUBE..................	1
2	PAOZZ	96906	MS35489-113	GROMMET,NONMETALLIC SPLIT AT ASSEMBLY............................	1
3	PAOZZ	96906	MS52103A080120R	HOSE ASSEMBLY,NONME..................	1
4	PAOZZ	81343	8-8 070202CA(CAD)	ELBOW,PIPE TO TUBE..................	1
5	PAOZZ	96906	MS51504A8-12	ELBOW,PIPE TO TUBE..................	1
6	PAOZZ	96906	MS52103A080060R	HOSE ASSEMBLY,NONME..................	1
7	PAOZZ	96906	MS51525A8-10	ADAPTER,STRAIGHT,TU..................	4
8	PAOZZ	96906	MS28778-10	PACKING,PREFORMED....................	4
9	PAOZZ	97111	H4-63-T10	COUPLING HALF,QUICK..................	2
10	PAOZZ	97111	H4-62SL-T10	COUPLING HALF,QUICK..................	2
11	PAOZZ	96906	MS52103A080300R	HOSE ASSEMBLY,NONME..................	1
12	PAOZZ	96906	MS52103A080310R	HOSE ASSEMBLY,NONME..................	1
13	PAOZZ	96906	MS51508A8-8	ELBOW,PIPE TO TUBE..................	1
14	PAOZZ	19207	12335334	VALVE,BALL...........................	1
15	PAOZZ	19207	12334991	BOLT,U...............................	1
16	PAOZZ	96906	MS51953-56	NIPPLE,PIPE..........................	1
17	PAOZZ	88044	AN916-3	ELBOW,PIPE...........................	1
18	PAOZZ	96906	MS51953-52	NIPPLE,PIPE..........................	1
19	PAOZZ	96906	MS27183-9	WASHER,FLAT..........................	2
20	PAOZZ	96906	MS17829-4C	NUT,SELF-LOCKING,HE..................	2
21	PAOZZ	96906	MS18154-60	SCREW,CAP,HEXAGON H..................	2
22	PAOZZ	96906	MS18154-58	SCREW,CAP,HEXAGON H..................	6
23	PAOZZ	96906	MS35338-46	WASHER,LOCK..........................	8
24	PAOZZ	96906	MS27183-14	WASHER,FLAT..........................	8
25	PFOZZ	19207	12334695	BRACKET,ENGINE ACCE..................	1
26	PAOFF	99688	602-3180	HEATER,VEHICULAR,CO..................	1

END OF FIGURE

5—6

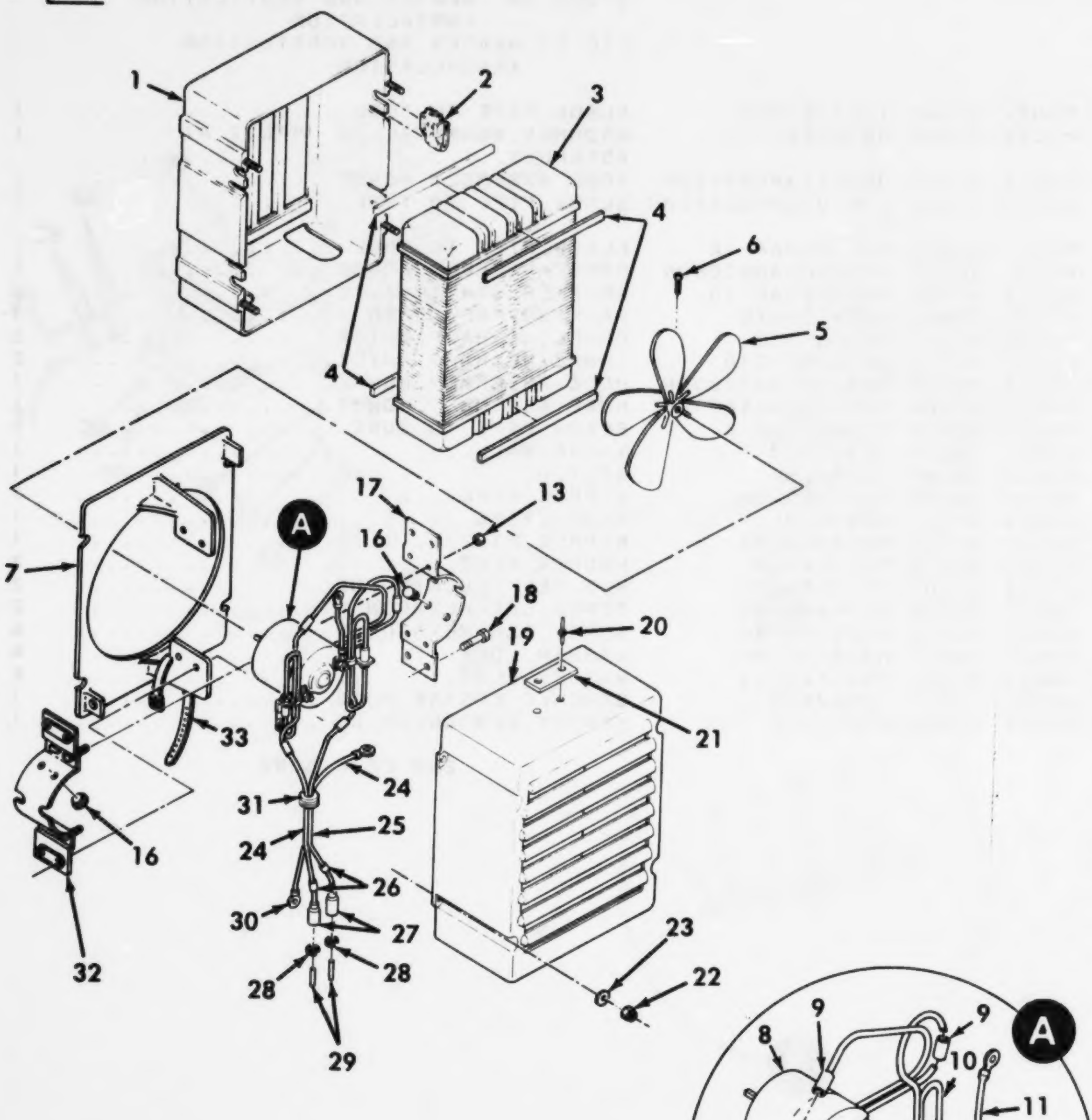

Figure 55. Heater Assembly.

(1) ITEM NO	(2) SMR CODE	(3) CAGEC	(4) PART NUMBER	(5) DESCRIPTION AND USABLE ON CODES(UOC)	(6) QTY
				GROUP AN: HEATER AND VENTILATION INSTALLATION FIG.55 HEATER ASSEMBLY	
1	XAFZZ	99688	54430	.CASE	1
2	PAFZZ	78553	C30584-3816	.NUT,CLIP-ON	4
3	PAFZZ	99688	10650	.COOLER,LUBRICATING	1
4	PFFZZ	99688	54540	.RUBBER STRIP	4
5	PAFFF	82877	23396-02	.IMPELLER,FAN,AXIAL	1
6	PAFZZ	96906	MS51023-113	..SETSCREW FAN	1
7	XAFZZ	99688	54450	.SHROUD	1
8	PFFZZ	99688	20223	.MOTOR,DIRECT CURREN	1
9	XDFZZ	81263	2321	.SPLICE,CONDUCTOR	4
10	PFFZZ	99688	85803	.SUPPRESSOR,PARASITI	1
11	PAFZZ	99688	70370	.LEAD,ELECTRICAL	1
12	PAFZZ	99688	51410	.WASHER,FLAT	2
13	PAFZZ	99688	60760	.NUT,PLAIN,ASSEMBLED	6
14	PAFZZ	99688	61310	.CLIP,ELECTRICAL	2
15	PFFZZ	99688	85632	.SUPPRESSOR,PARASITI	1
16	PFFZZ	99688	54470	.BUMPER,MOTOR	8
17	PFFZZ	99688	95090	.STRAP,RETAINING	1
18	PAFZZ	11083	1H3337	.BOLT,MACHINE	4
19	XAFZZ	99688	54440	.COVER	1
20	PFFZZ	99688	61180	.RIVET,TUBULAR	2
21	PFFZZ	99688	51021	.PLATE,IDENTIFICATIO	1
22	PAFZZ	96906	MS21083N4	.NUT,SELF-LOCKING,HE	4
23	PAFZZ	99688	50970	.WASHER,FLAT	4
24	PAFZZ	99688	65057	.LEAD,ELECTRICAL	2
25	MFFZZ	81349	M13486/1-5AR	.WIRE,ELECTRICAL MAKE FROM ELECTRICAL WIRE,P/N M13486/1-5	V
26	PAFZZ	81349	M43436/1-1	.BAND,MARKER	2
27	PAFZZ	19207	8338566	.SHELL,ELECTRICAL CO	2
28	PAFZZ	19207	8338567	.WASHER,SLOTTED	2
29	PAFZZ	96906	MS27148-2	.CONTACT,ELECTRICAL	2
30	PAFZZ	99688	65048	.LEAD,ELECTRICAL	1
31	PAFZZ	96906	MS35489-38	.GROMMET,NONMETALLIC	1
32	PFFZZ	99688	82050	.STRAP,RETAINING	1
33	PAFZZ	53421	T30R	.STRAP,TIEDOWN,ELECT	3

END OF FIGURE

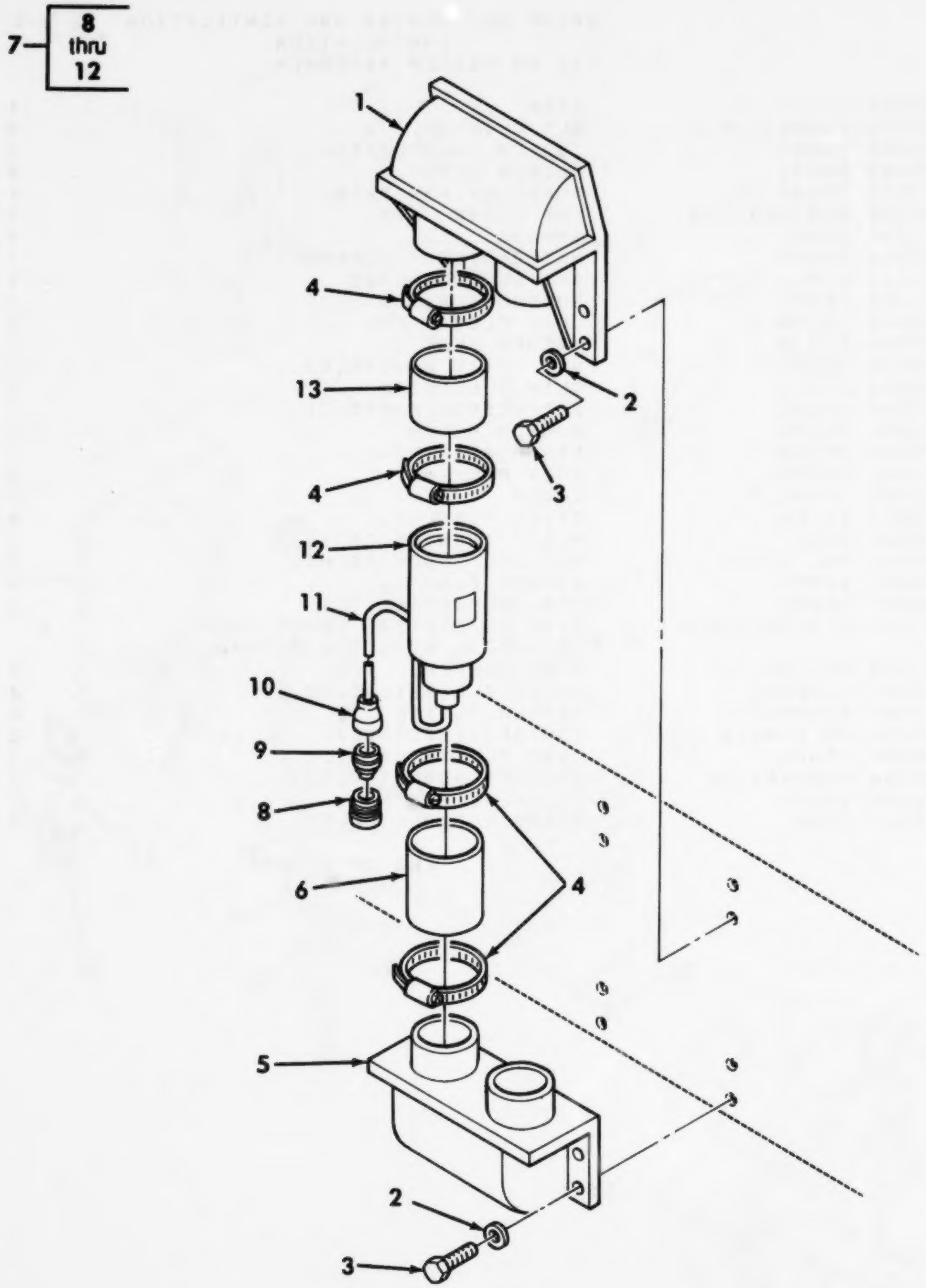

Figure 56. Driver's Ventilation Fan Installation.

(1) ITEM NO	(2) SMR CODE	(3) CAGEC	(4) PART NUMBER	(5) DESCRIPTION AND USABLE ON CODES(UOC)	(6) QTY
				GROUP AN: HEATER AND VENTILATION INSTALLATION	
				FIG.56 DRIVER'S VENTILATION FAN INSTALLATION	
1	PFOZZ	19207	12357194	DUCT,BLOWER	1
2	PAOZZ	96906	AN960-616	WASHER,FLAT	8
3	PAOZZ	96906	MS18154-58	SCREW,CAP,HEXAGON H	8
4	PAOZZ	96906	MS35842-15	CLAMP,HOSE	8
5	PFOZZ	19207	12357195	DUCT,INTAKE	1
6	MOOZZ	96906	MS521301A230054	HOSE,NONMETALLIC MAKE FROM HOSE,P/N 12334250-19	2
7	PAOFF	19207	12292100	FAN,VANEAXIAL	2
8	PAFZA	96906	MS3476W12-3S	.CONNECTOR,PLUG,ELEC	1
9	XDFZZ	19207	12293185-3	.ADAPTER,CONNECTOR,S	1
10	PFFZZ	06090	202D921-4	.CONNECTOR,BOOT	1
11	MFFZZ	19207	12295791-5AR	.INSULATION SLEEVING MAKE FROM INSULATION SLEEVING,P/N M23053/5-305-0	V
12	XAFZZ	19207	12292100-1	.FAN,ELEC	1
13	MOOZZ	96906	MS521301A230030	HOSE,NONMETALLIC MAKE FROM HOSE,P/N 12334250-19	2

END OF FIGURE

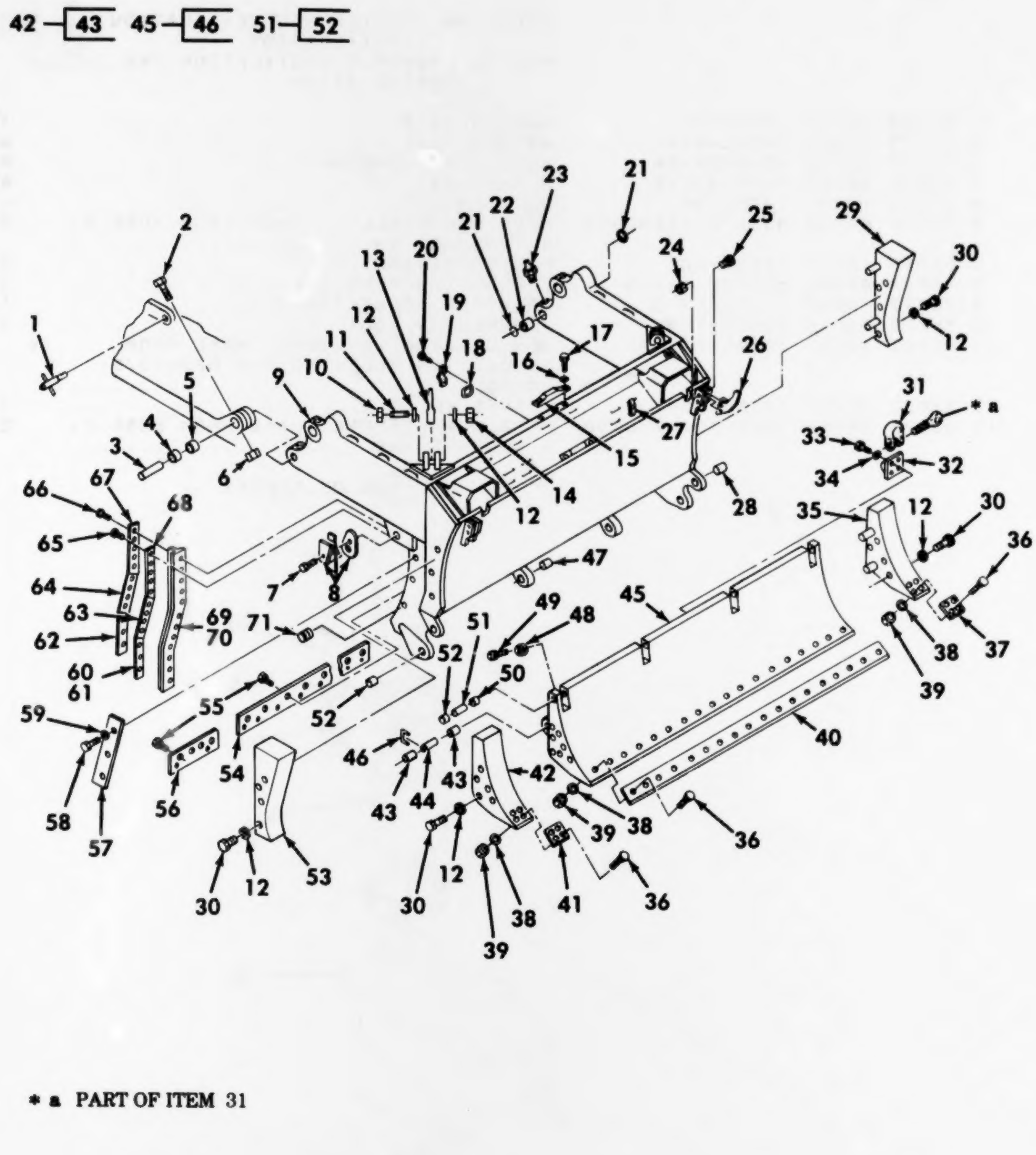

Figure 57. Apron and Dozer Assembly Installation.

(1) ITEM NO	(2) SMR CODE	(3) CAGEC	(4) PART NUMBER	(5) DESCRIPTION AND USABLE ON CODES(UOC)	(6) QTY
				GROUP AP: HULL ASSEMBLY	
				FIG.57 APRON AND DOZER ASSEMBLY INSTALLATION	
1	PAOZZ	84256	55520	PIN,QUICK RELEASE	2
2	PAOZZ	97403	13204E2945	SCREW,CAP,HEXAGON H	2
3	PAOZZ	97403	13204E2943	PIN,STRAIGHT,HEADLE	2
4	PAOZZ	97403	13204E2944	BUSHING,SLEEVE	2
5	PAOZZ	97403	13204E2864	BUSHING,SLEEVE	2
6	PAOZZ	96906	MS17829-8C	NUT,SELF-LOCKING,HE	2
7	PAOZZ	96906	MS18154-60	SCREW,CAP,HEXAGON H	2
8	PAOZZ	97403	13214E2664	PIN ASSEMBLY,APRON	2
9	PFOFD	97403	13204E3925	APRON	1
10	PAOZZ	96906	MS35691-73	NUT,PLAIN,HEXAGON	2
11	PAOZZ	19207	12355497	STUD,PLAIN	2
12	PAOZZ	96906	MS27183-27	WASHER,FLAT	22
13	PFOZZ	19207	12355496	EYE,SUSPENSION	2
14	PAOZZ	96906	MS51922-72	NUT,SELF-LOCKING,HE	2
15	PAOZZ	97403	13214E2412	GUIDE,CHAIN	2
16	PAOZZ	96906	MS35338-46	WASHER,LOCK	4
17	PAOZZ	96906	MS90728-62	SCREW,CAP,HEXAGON H	4
18	PAOZZ	16007	353512-1	RING,TIE DOWN	3
19	PAOZZ	07878	65B3732	STRAP,RETAINING	3
20	PAOZZ	96906	MS90728-54L	BOLT,SELF-LOCKING	6
21	PAOZZ	81349	M27426-3176B	RING,RETAINING	4
22	PAOZZ	51588	B32L	BEARING,PLAIN,SELF-	2
23	PAOZZ	96906	MS15003-1	FITTING,LUBRICATION	2
24	PAOZZ	96906	MS51922-49	NUT,SELF-LOCKING,HE	2
25	PAOZZ	96906	MS51975-57	SCREW,SHOULDER	2
26	PFOZZ	19207	12355299	LATCH,DOZER	2
27	PAOZZ	97403	13214E2360-3	STRAP,WEBBING	8
28	PAOZZ	97403	13204E2650-3	BUSHING,SLEEVE	2
29	PAOZZ	97403	13214E2482	EXTENSION ASSEMBLY	1
30	PAOZZ	97403	13211E8616	SCREW,CAP,HEXAGON H	18
31	PAOZZ	19207	12355445	SHACKLE	1
32	PAOZZ	19207	12357409	BRACKET,TOW HOOK	1
33	PAOZZ	96906	MS90728-232	SCREW,CAP,HEXAGON H	4
34	PAOZZ	96906	MS35338-53	WASHER,LOCK	4
35	PAOZZ	97403	13214E2483	EXTENSION ASSEMBLY	1
36	PAOZZ	19207	12335260	BOLT,SQUARE NECK	26
37	PAOZZ	97403	13211E8614	BIT,END LEFT HAND	1
38	PAOZZ	96906	MS27183-23	WASHER,FLAT	26
39	PAOZZ	96906	MS51967-24	NUT,PLAIN,HEXAGON	26
40	PAOZZ	97403	13211E8643	CUTTING EDGE,MOLDBO	1
41	PAOZZ	97403	13211E8613	BIT,END RIGHT HAND	1
42	PAOZZ	97403	13214E2484	EXTENSION ASSEMBLY	1
43	PAOZZ	19207	12357158-1	.BUSHING	4
44	PFOZZ	97403	13204E2644	PIN,SHOULDER,HEADLE	2
45	PFOFD	97403	13204E3917	BLADE,BULLDOZER,EAR	1
46	PAOZZ	19207	12357177	.RETAINER,APRON,DOZE	2
47	PAOZZ	97403	13204E2650-2	BUSHING,SLEEVE	2
48	PAOZZ	96906	MS27183-18	WASHER,FLAT	4

(1) ITEM NO	(2) SMR CODE	(3) CAGEC	(4) PART NUMBER	(5) DESCRIPTION AND USABLE ON CODES(UOC)	(6) QTY
49	PAOZZ	96906	MS51095-420	SCREW,CAP,HEXAGON H..................	4
50	PAOZZ	97403	13204E2650-1	BUSHING,SLEEVE........................	8
51	PAOZZ	97403	13204E2652	PIN,GROOVED,HEADLES...................	4
52	PAOZZ	19207	12357158-2	.BUSHING..............................	2
53	PAOZZ	97403	13214E2481	EXTENSION ASSEMBLY....................	1
54	PAOZZ	97403	13214E2515	PLATE,WEAR............................	1
55	PAOZZ	96906	MS24667-76	SCREW,CAP,SOCKET HE...................	21
56	PAOZZ	97403	13214E2403	PLATE,MOUNTING,GROM...................	2
57	PAOZZ	19207	12325738	SPACER,PLATE..........................	2
58	PAOZZ	96906	MS90728-62L	BOLT,SELF-LOCKING.....................	6
59	PAOZZ	96906	MS27183-14	WASHER,FLAT...........................	6
60	PAOZZ	97403	13214E2843	RETAINER,OIL SEAL LEFT HAND.........	1
61	PAOZZ	97403	13214E2690	RETAINER,OIL SEAL RIGHT HAND........	1
62	PAOZZ	97403	13214E2691	RETAINER,OIL SEAL.....................	2
63	PAOZZ	97403	13214E2696	RETAINER,OIL SEAL.....................	2
64	PAOZZ	97403	13214E2693	RETAINER,OIL SEAL.....................	2
65	PAOZZ	96906	MS35190-289	SCREW,MACHINE.........................	24
66	PAOZZ	96906	MS35190-319	SCREW,MACHINE.........................	24
67	PAOZZ	97403	13214E2692	RETAINER,OIL SEAL.....................	2
68	PAOZZ	97403	13214E2694	RETAINER,OIL SEAL.....................	2
69	PAOZZ	97403	13214E2737	SEAL,RUBBER SPECIAL RIGHT HAND.....	1
70	PAOZZ	97403	13214E2695	SEAL,RUBBER SPECIAL LEFT HAND......	1
71	PAOZZ	81348	WW-P-471ACAAAG	PLUG..................................	2

END OF FIGURE

1— 2 thru 30

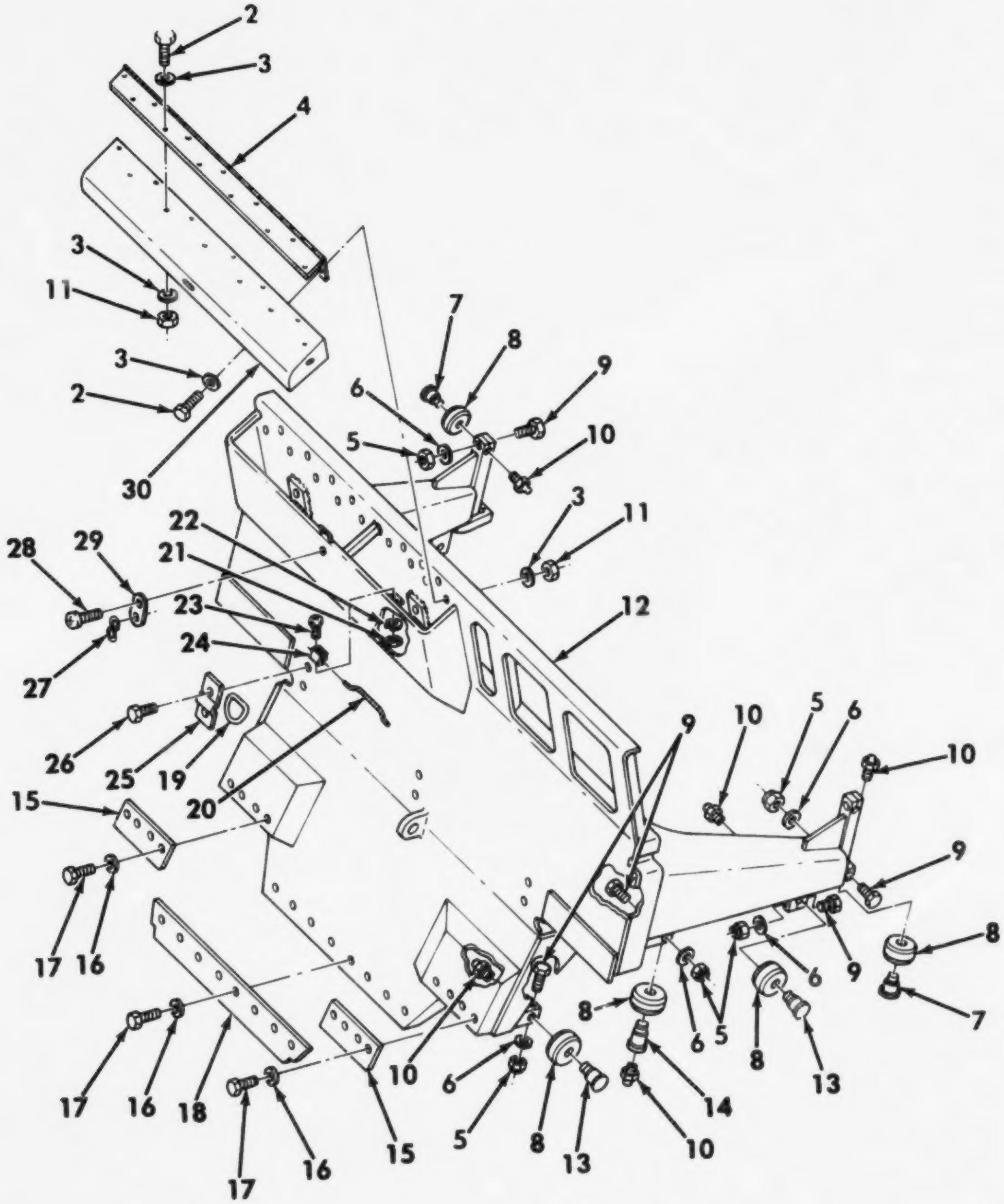

Figure 58. Ejector Assembly.

(1) ITEM NO	(2) SMR CODE	(3) CAGEC	(4) PART NUMBER	(5) DESCRIPTION AND USABLE ON CODES(UOC)	(6) QTY
				GROUP AP: HULL ASSEMBLY FIG.58 EJECTOR ASSEMBLY	
1	AOFFF	19207	12355304	EJECTOR ASSY,BOLTED.................	1
2	PAOZZ	96906	MS90727-7	.SCREW,CAP,HEXAGON H...............	23
3	PAOZZ	96906	MS27183-10	.WASHER,FLAT.......................	46
4	MOOZZ	19207	12335306	.HINGE MAKE FROM HINGE,P/N MS35830-14DF....................................	1
5	PAOZZ	96906	MS17829-8C	.NUT,SELF-LOCKING,HE...............	10
6	PAOZZ	96906	MS27183-18	.WASHER,FLAT.......................	10
7	PAOZZ	97403	13204E2974	.SHAFT,SHOULDERED..................	4
8	PAOZZ	97403	13204E2972	.BEARING,BALL,ANNULA...............	10
9	PAOZZ	96906	MS90728-121	.SCREW,CAP,HEXAGON H...............	10
10	PBOZZ	96906	MS15003-1	.FITTING,LUBRICATION...............	10
11	PAOZZ	96906	MS21045C4	.NUT,SELF-LOCKING,HE...............	23
12	PBOFF	19207	12362098	.EJECTOR...........................	1
13	PAOZZ	97403	13204E2973	.SHAFT,SHOULDERED..................	4
14	PAOZZ	97403	13214E2673	.SHAFT,SHOULDERED..................	2
15	PAOZZ	97403	13214E2379	.CUTTING EDGE,MOLDBO...............	2
16	PAOZZ	96906	MS27183-15	.WASHER,FLAT.......................	16
17	PAOZZ	96906	MS90728-62	.SCREW,CAP,HEXAGON H...............	16
18	PAOZZ	97403	13214E2378	.PLATE,WEAR CENTER.................	1
19	PAOZZ	16007	353512-1	.RING,TIE DOWN.....................	3
20	PAOZZ	19207	12357282	.CONNECTING LINK,RIG...............	1
21	PAOZZ	96906	MS35649-222	.NUT,PLAIN,HEXAGON.................	2
22	PAOZZ	96906	MS35338-39	.WASHER,LOCK.......................	2
23	PAOZZ	96906	MS35206-207	.SCREW,MACHINE.....................	2
24	PAOZZ	81349	M24066/2-316	.CLIP,SPRING TENSION...............	1
25	PAOZZ	07878	65B3732	.STRAP,RETAINING...................	3
26	PAOZZ	96906	MS18154-58	.SCREW,CAP,HEXAGON H...............	6
27	PAOZZ	96906	MS87006-23	.HOOK,CHAIN,S......................	1
28	PAOZZ	96906	MS24629-45	.SCREW,TAPPING,THREA...............	1
29	PAOZZ	19207	12334724-1	.TAB...............................	1
30	PFOZZ	19207	12335308	.COVER ACCESS......................	1

END OF FIGURE

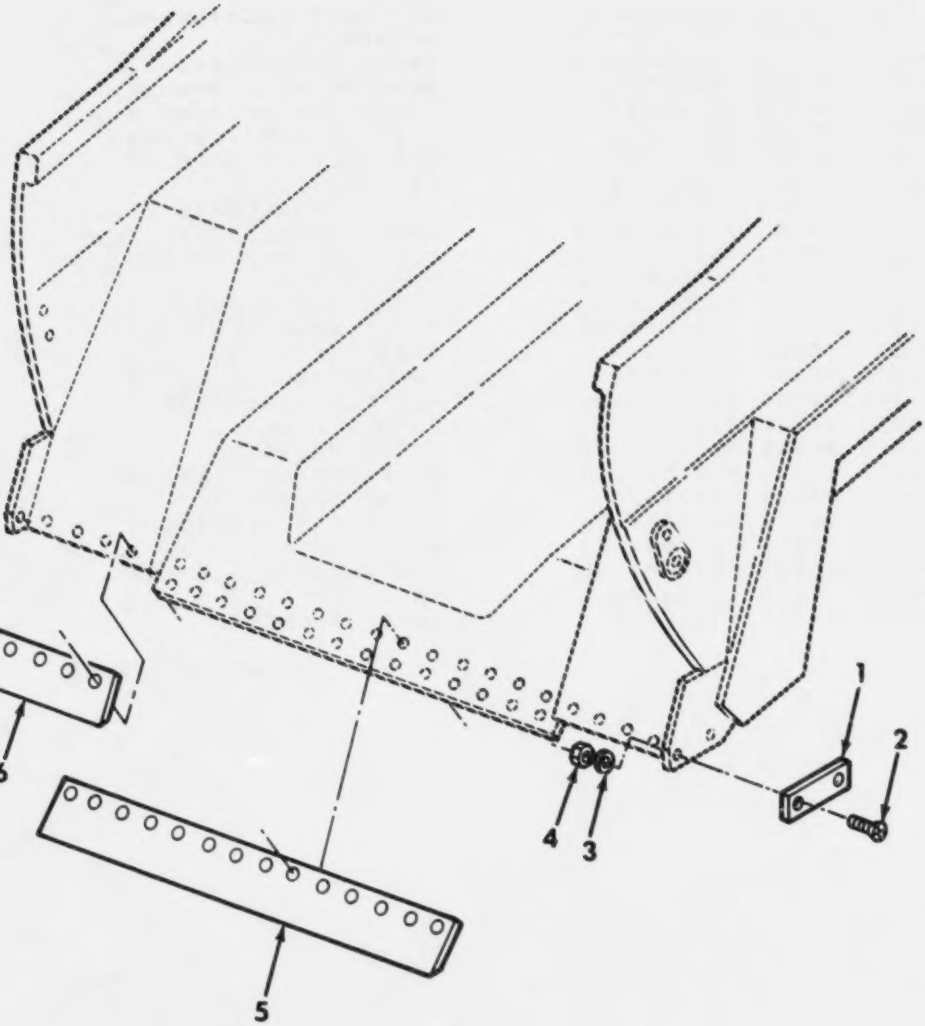

Figure 59. Bowl Cutting Edges.

(1) ITEM NO	(2) SMR CODE	(3) CAGEC	(4) PART NUMBER	(5) DESCRIPTION AND USABLE ON CODES(UOC)	(6) QTY
				GROUP AP: HULL ASSEMBLY FIG.59 BOWL CUTTING EDGES	
1	PAOZZ	97403	13211E8644	CUTTING EDGE,MOLDBO..................	2
2	PAOZZ	19207	12335260	BOLT,SQUARE NECK......................	26
3	PAOZZ	96906	MS27183-23	WASHER,FLAT...........................	26
4	PAOZZ	96906	MS51967-24	NUT,PLAIN,HEXAGON.....................	26
5	PAOZZ	97403	13211E8646	CUTTING EDGE,MOLDBO..................	2
6	PAOZZ	97403	13211E8645	CUTTING EDGE,MOLDBO..................	1

END OF FIGURE

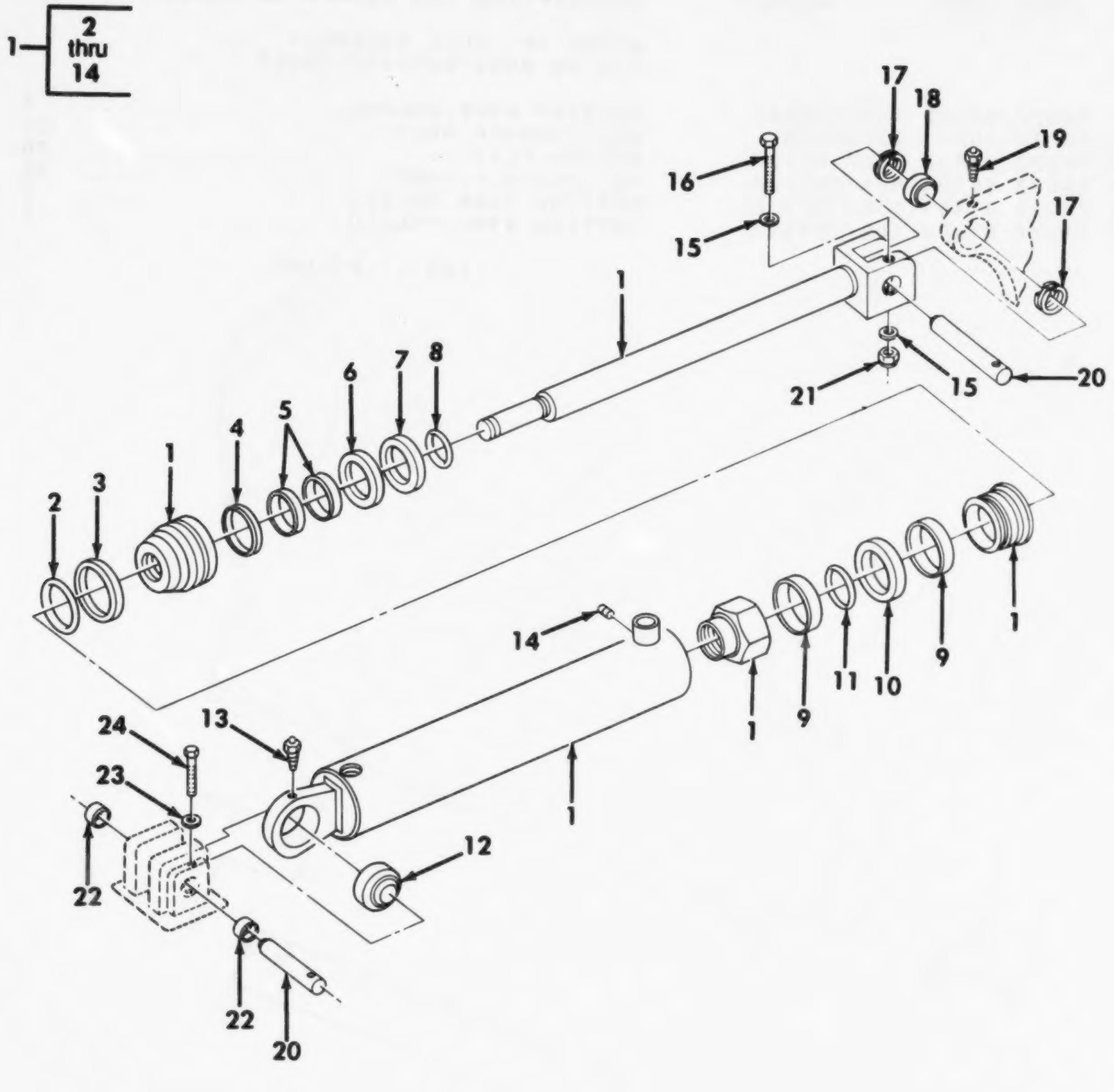

Figure 60. Hydraulic Apron Cylinder Assembly and Attaching Hardware.

(1) ITEM NO	(2) SMR CODE	(3) CAGEC	(4) PART NUMBER	(5) DESCRIPTION AND USABLE ON CODES(UOC)	(6) QTY
				GROUP AP: HULL ASSEMBLY FIG.60 HYDRAULIC APRON CYLINDER ASSEMBLY AND ATTACHING HARDWARE	
1	PAOHH	19207	12325843	CYLINDER ASSEMBLY,A..................	2
2	KFHZZ	96906	MS28775-342	.PACKING,HEAD STATIC PART OF KIT P/N 57K1144............................	1
3	KFHZZ	96906	MS28782-45	.RETAINER,PACKING PART OF KIT P/N 57K1144.............................	1
4	KFHZZ	19207	12335304-2	.RING,BUFFER PART OF KIT P/N 57K1144	1
5	KFHZZ	19207	12335305-3	.RING,WEAR PART OF KIT P/N 57K1144..	2
6	KFHZZ	19207	12335044-3	.SEAL,ROD PART OF KIT P/N 57K1144...	1
7	KFHZZ	19207	12335303-3	.WIPER PART OF KIT P/N 57K1144......	1
8	KFHZZ	96906	MS28775-121	.PACKING,PREFORMED PART OF KIT P/N 57K1144.............................	1
9	KFHZZ	19207	12335305-5	.RING,WEAR PART OF KIT P/N 57K1144..	2
10	KFHZZ	19207	12369135-3	.SEAL PART OF KIT P/N 57K1144.......	1
11	KFHZZ	06085	12369134-1	.PACKING,PREFORMED PART OF KIT P/N 57K1144.............................	1
12	PAOZZ	60380	15SF24	.BEARING,PLAIN,SELF-................	1
13	PAOZZ	96906	MS15003-1	.FITTING,LUBRICATION................	1
14	PAHZZ	96906	MS51045-49	.SETSCREW...........................	1
15	PAOZZ	96906	MS27183-18	WASHER,FLAT.........................	4
16	PAOZZ	96906	MS90728-123	SCREW,CAP,HEXAGON H.................	2
17	PAOZZ	81349	M27426-3158B	RING,RETAINING......................	4
18	PAOZZ	60380	15SF24	BEARING,PLAIN,SELF-.................	2
19	PAOZZ	96906	MS15003-1	FITTING,LUBRICATION.................	2
20	PAOZZ	97403	13211E8634	PIN,STRAIGHT,HEADLE.................	4
21	PAOZZ	96906	MS17829-8C	NUT,SELF-LOCKING,HE.................	2
22	PAOZZ	97403	13204E2472	BUSHING,SLEEVE......................	4
23	PAOZZ	96906	MS27183-14	WASHER,FLAT.........................	2
24	PAOZZ	96906	MS90728-75L	BOLT,SELF-LOCKING...................	2

END OF FIGURE

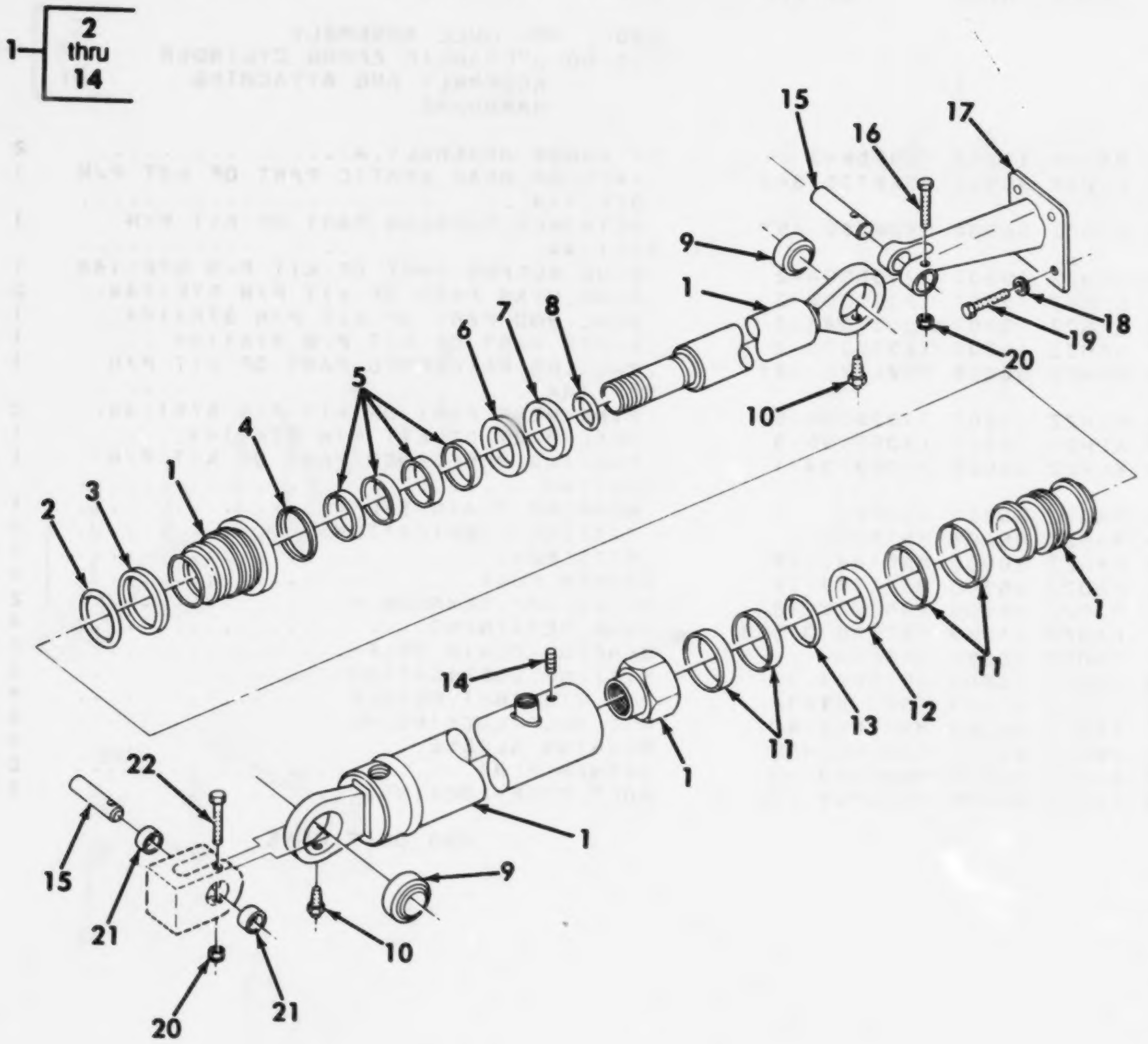

Figure 61. Hydraulic Ejector Cylinder Assembly and Attaching Hardware.

(1) ITEM NO	(2) SMR CODE	(3) CAGEC	(4) PART NUMBER	(5) DESCRIPTION AND USABLE ON CODES(UOC)	(6) QTY
				GROUP AP: HULL ASSEMBLY FIG.61 HYDRAULIC EJECTOR CYLINDER ASSEMBLY AND ATTACHING HARDWARE	
1	PAOHH	19207	12325844	CYLINDER ASSEMBLY,A................	1
2	KFHZZ	96906	MS28775-342	.PACKING,HEAD STATIC PART OF KIT P/N 57K1145..........................	1
3	KFHZZ	96906	MS28782-45	.RETAINER,HEAD STATI PART OF KIT P/N 57K1145..........................	1
4	KFHZZ	19207	12335304-3	.RING SEAL PART OF PART OF KIT P/N 57K1145...........................	1
5	KFHZZ	19207	12335305-4	.RING,WEAR PART OF KIT P/N 57K1145..	4
6	KFHZZ	19207	12335044-4	.SEAL,ROD PART OF KIT P/N 57K1145...	1
7	KFHZZ	19207	12335303-4	.WIPER,ROD PART OF KIT P/N 57K1145..	1
8	KFHZZ	96906	MS28775-224	.PACKING,ROD STATIC PART OF KIT P/N 57K1145...........................	1
9	PAOZZ	60380	15SF24	.BEARING,PLAIN,SELF-...............	2
10	PAOZZ	96906	MS15003-1	.FITTING,LUBRICATION...............	2
11	KFHZZ	19207	12335305-5	.RING,WEAR PART OF KIT P/N 57K1145..	4
12	KFHZZ	19207	12369135-3	.SEAL PART OF KIT P/N 57K1145.......	1
13	KFHZZ	06085	12369134-1	.PACKING,PREFORMED PART OF KIT P/N 57K1145...........................	1
14	PAHZZ	96906	MS51045-49	.SETSCREW..........................	1
15	PAOZZ	97403	13211E8634	PIN STRAIGHT,HEADED................	2
16	PAOZZ	96906	MS90728-70	SCREW,CAP,HEXAGON H................	1
17	PFOZZ	97403	13211E8628	BRACKET,EJECTOR....................	1
18	PAOZZ	96906	MS9320-16	WASHER,FLAT........................	4
19	PAOZZ	96906	MS90728-163L	BOLT,SELF-LOCKING..................	4
20	PAOZZ	96906	MS17829-6C	NUT,SELF-LOCKING,HE................	2
21	PAOZZ	97403	13204E2472	BUSHING,SLEEVE.....................	2
22	PAOZZ	96906	MS90728-73	SCREW,CAP,HEXAGON H................	1

END OF FIGURE

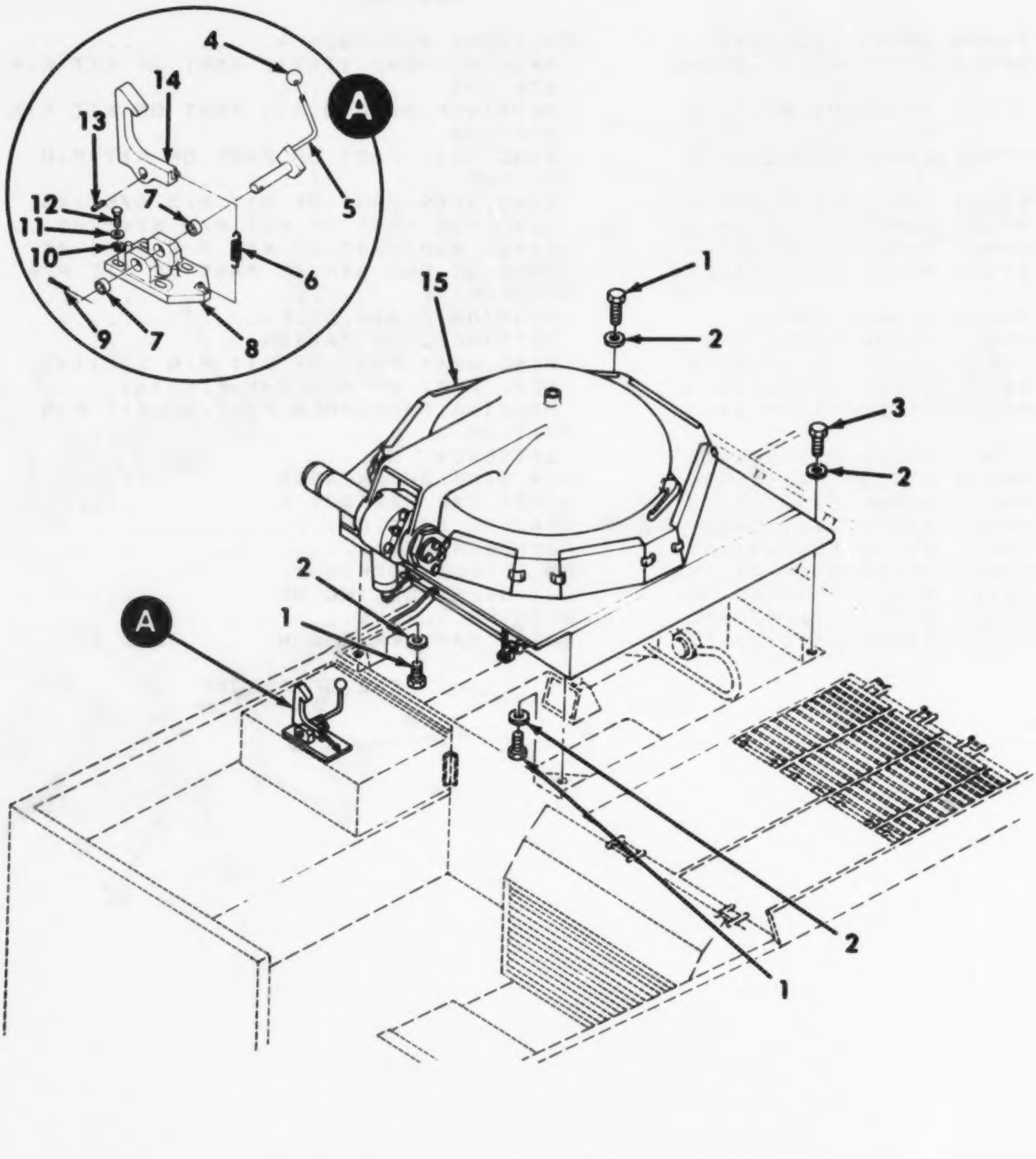

Figure 62. Driver's Hatch and Latch Installation.

(1) ITEM NO	(2) SMR CODE	(3) CAGEC	(4) PART NUMBER	(5) DESCRIPTION AND USABLE ON CODES(UOC)	(6) QTY
				GROUP AP: HULL ASSEMBLY FIG.62 DRIVER'S HATCH AND LATCH INSTALLATION	
1	PAOZZ	96906	MS51095-420L	BOLT,SELF-LOCKING....................	3
2	PAOZZ	96906	MS27183-18	WASHER,FLAT..........................	4
3	PAOZZ	96906	MS51095-422L	BOLT,SELF-LOCKING....................	1
4	PAOZZ	72512	55M	KNOB.................................	1
5	PAOZZ	19207	12379457	HANDLE,MANUAL CONTR..................	1
6	PAOZZ	19207	12362060	SPRING,HELICAL,EXTE..................	1
7	PAOZZ	81349	M81934/1-160032	BEARING,SLEEVE.......................	2
8	XDOZZ	19207	12362194	STRIKE,CATCH.........................	1
9	PAOZZ	96906	MS24665-497	PIN,COTTER...........................	1
10	PAOZZ	96906	MS35338-48	WASHER,LOCK..........................	4
11	PAOZZ	96906	MS9320-14	WASHER,FLAT..........................	4
12	PAOZZ	96906	MS90728-113	SCREW,CAP,HEXAGON H..................	4
13	PAOZZ	96906	MS20066-252	KEY,MACHINE..........................	1
14	PBOZZ	19207	12362195	LATCH,DOOR,VEHICULA..................	1
15	PFOOO	19207	12362200	HATCH ASSEMBLY,DRIV..................	1

END OF FIGURE

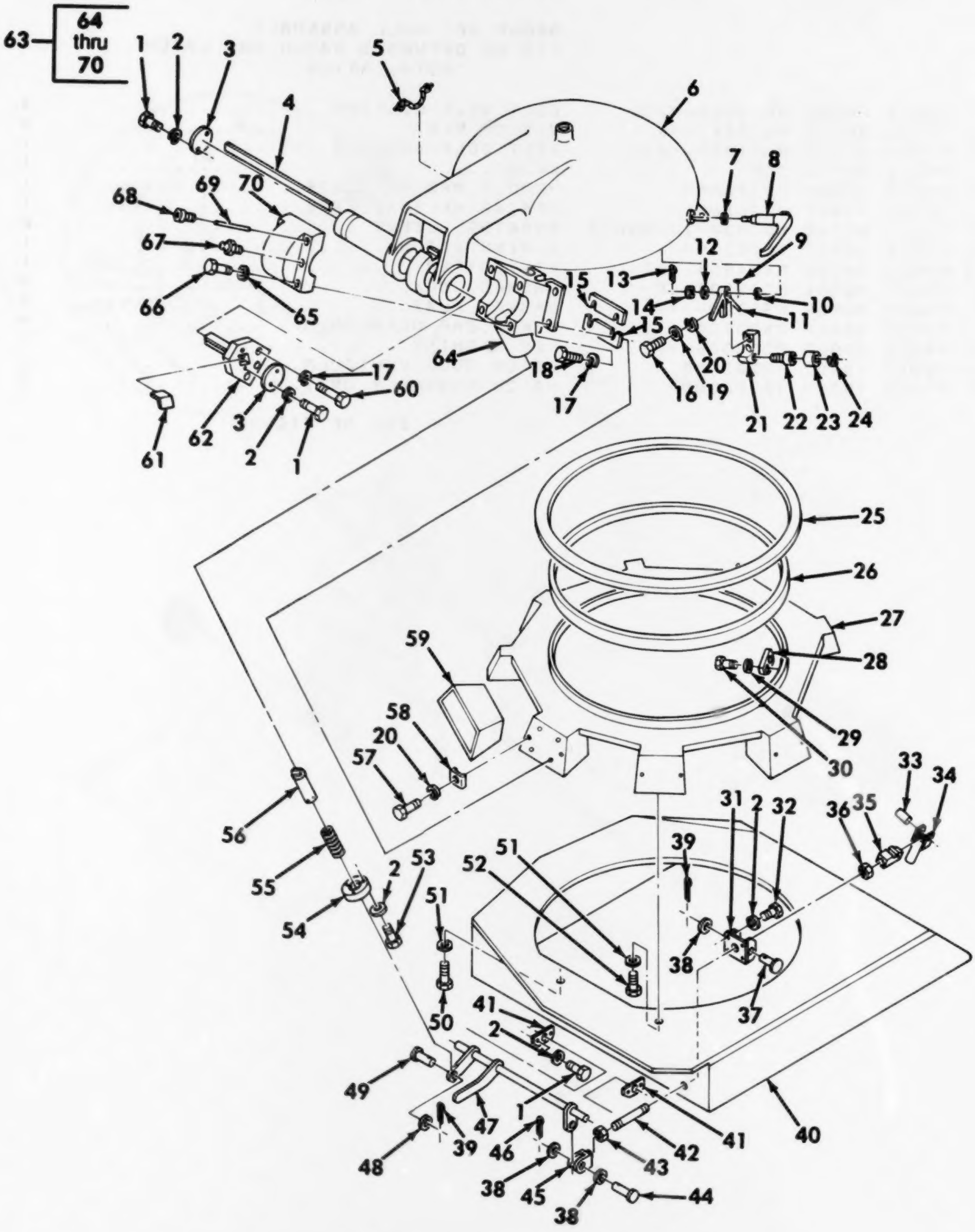

Figure 63. Driver's Hatch Assembly.

(1) ITEM NO	(2) SMR CODE	(3) CAGEC	(4) PART NUMBER	(5) DESCRIPTION AND USABLE ON CODES(UOC)	(6) QTY
				GROUP AP: HULL ASSEMBLY FIG.63 DRIVER'S HATCH ASSEMBLY	
1	PAOZZ	96906	MS90726-5	.SCREW,CAP,HEXAGON H................	8
2	PAOZZ	02614	N405P41B6	.WASHER,LOCK........................	15
3	PFOZZ	19207	12362163	.COVER,ACCESS.......................	2
4	PAOZZ	19207	12362188	.SPRING,FLAT........................	22
5	MOOZZ	19207	12362200-1	.ROPE,FIBROUS MAKE FROM POLYPROPLENE ROPE,P/N 11677925......	V
6	PFOZZ	19207	12362157	.COVER HATCH........................	1
7	PAOZZ	81349	M12133/1-14P	.WASHER,SPRING TENSI................	1
8	PBOZZ	19207	12362169	.HANDLE,DOOR........................	1
9	PAOZZ	96906	MS35756-8	.KEY WOODRUFF.......................	1
10	PAOZZ	81349	M12133/1-11P	.WASHER,SPRING TENSI................	1
11	PBOZZ	19207	12362170	.HANDLE DOOR........................	1
12	PAOZZ	96906	MS27183-18	.WASHER,FLAT........................	1
13	PAOZZ	96906	MS24665-372	.PIN................................	1
14	PAOZZ	96906	MS35692-33	.NUT,PLAIN,SLOTTED,H................	1
15	PAOZZ	19207	12362192-1	.SPACER,PLATE 5.0 INCHES BETWEEN SLOTS..............................	5
15	PAOZZ	19207	12362192-2	.SPACER,PLATE 3.5 INCHES BETWEEN SLOTS..............................	5
16	PAOZZ	96906	MS90727-39	.SCREW,CAP,HEXAGON H................	2
17	PAOZZ	96906	MS35338-50	.WASHER,LOCK........................	7
18	PAOZZ	96906	MS90727-162	.SCREW,CAP,HEXAGON H................	4
19	PAOZZ	96906	MS27183-12	.WASHER,FLAT........................	2
20	PAOZZ	96906	MS35338-45	.WASHER,LOCK........................	18
21	PBOZZ	19207	12362156	.HANDLE,DOOR........................	1
22	PAOZZ	19207	12362155	.PIN SHOULDER,HANDLE................	1
23	PAOZZ	81349	M81934/1-11-C-02-0	.BEARING,SLEEVE.....................	1
24	PAOZZ	96906	MS16632-4068	.RING,RETAINER......................	1
25	PAOZZ	19207	12362167	.SEAL,HATCH.........................	1
26	PAOZZ	19207	12362059	.PAD CUSHIONING.....................	1
27	PFOZZ	19207	12362166	.RING...............................	1
28	PAOZZ	19207	12362171	.LATCH,DOOR VEHICUL.................	1
29	PAOZZ	96906	MS35338-46	.WASHER,LOCK........................	2
30	PAOZZ	96906	MS16997-99	.SCREW,CAP,SOCKET HE................	2
31	PBOZZ	19207	12379353	.BRACKET............................	1
32	PAOZZ	96906	MS90725-6	.SCREW,CAP,HEXAGON H................	4
33	PAOZZ	96906	MS16555-61	.PIN,STRAIGHT.......................	1
34	PBOZZ	19207	12379369	.HANDLE,DOOR........................	1
35	PFOZZ	19207	12379359	.BLOCK,MOUNTING.....................	1
36	PAOZZ	96906	MS51967-8	.NUT................................	1
37	PAOZZ	96906	MS20392-5C69	.PIN,STRAIGHT,HEADED................	1
38	PAOZZ	96906	MS27183-14	.WASHER,FLAT........................	3
39	PAOZZ	96906	MS24665-151	.PIN,COTTER.........................	1
40	PFOZZ	19207	12362172	.DOOR,HATCH,VEHICLE.................	1
41	PAOZZ	19207	12362187	.PLATE,RETAINING,SHA................	2
42	PAOZZ	19207	12379362	.ROD,HATCH..........................	1
43	PAOZZ	96906	MS35691-21	.NUT,PLAIN,HEXAGON..................	1
44	PAOZZ	96906	MS20392-5C39	.PIN,STRAIGHT HEADER................	1

(1) ITEM NO	(2) SMR CODE	(3) CAGEC	(4) PART NUMBER	(5) DESCRIPTION AND USABLE ON CODES(UOC)	(6) QTY
45	PAOZZ	19207	12379360	.CLEVIS,ROD,END	1
46	PAOZZ	96906	MS24665-300	.PIN,COTTER	2
47	PBOZZ	19207	12379346	.LINKAGE,HATCH,DRIVE	1
48	PAOZZ	96906	MS27183-10	.WASHER,FLAT	1
49	PAOZZ	96906	MS20392-3C45	.PIN,STRAIGHT,HEADED	1
50	PAOZZ	96906	MS90727-114L	.BOLT,SELF-LOCKING	1
51	PAOZZ	96906	MS9320-14	.WASHER,FLAT	8
52	PAOZZ	96906	MS90728-116L	.SCREW,CAP,HEXAGON,H	7
53	PAOZZ	96906	MS90727-12	.BOLT,SELF-LOCKING	3
54	PBOZZ	19207	12379357	.CAP,SPRING	1
55	PAOZZ	19207	12379342	.SPRING,HELICAL,COMP	1
56	PAOZZ	19207	12379365	.PIN	1
57	PAOZZ	96906	MS90728-35L	.BOLT,SELF-LOCKING	16
58	PAOZZ	19207	12362168	.RETAINER,HATCH,DRIV	16
59	PAOZZ	19207	10925306	.BLOCK,DIRECT VISION	8
60	PAOZZ	96906	MS90727-168	.SCREW,CAP,HEXAGON,H	3
61	PAOZZ	19207	12362165-1	.SHIM .075	V
61	PAOZZ	19207	12362165-2	.SHIM .060	V
61	PAOZZ	19207	12362165-3	.SHIM .048	V
62	PBOZZ	19207	12362189	.ANCHOR,SPRING	1
63	PBOOO	19207	12379446	.HINGE,DOOR VEHICUL	1
64	XAOZZ	19207	12379451	..BASE,HINGE	1
65	PAOZZ	96906	MS35338-46	..WASHER,LOCK	4
66	PAOZZ	96906	MS90726-70	..SCREW,CAP,HEXAGON,H	4
67	PAOZZ	96906	MS15001-1	..FITTING,LUBRICATION	2
68	PAOZZ	96906	MS51966-151	..SETSCREW	2
69	PAOZZ	96906	MS35675-41	..PIN,STRAIGHT,HEADLE	2
70	XAOZZ	19207	12379450	..CAP,HINGE	1

END OF FIGURE

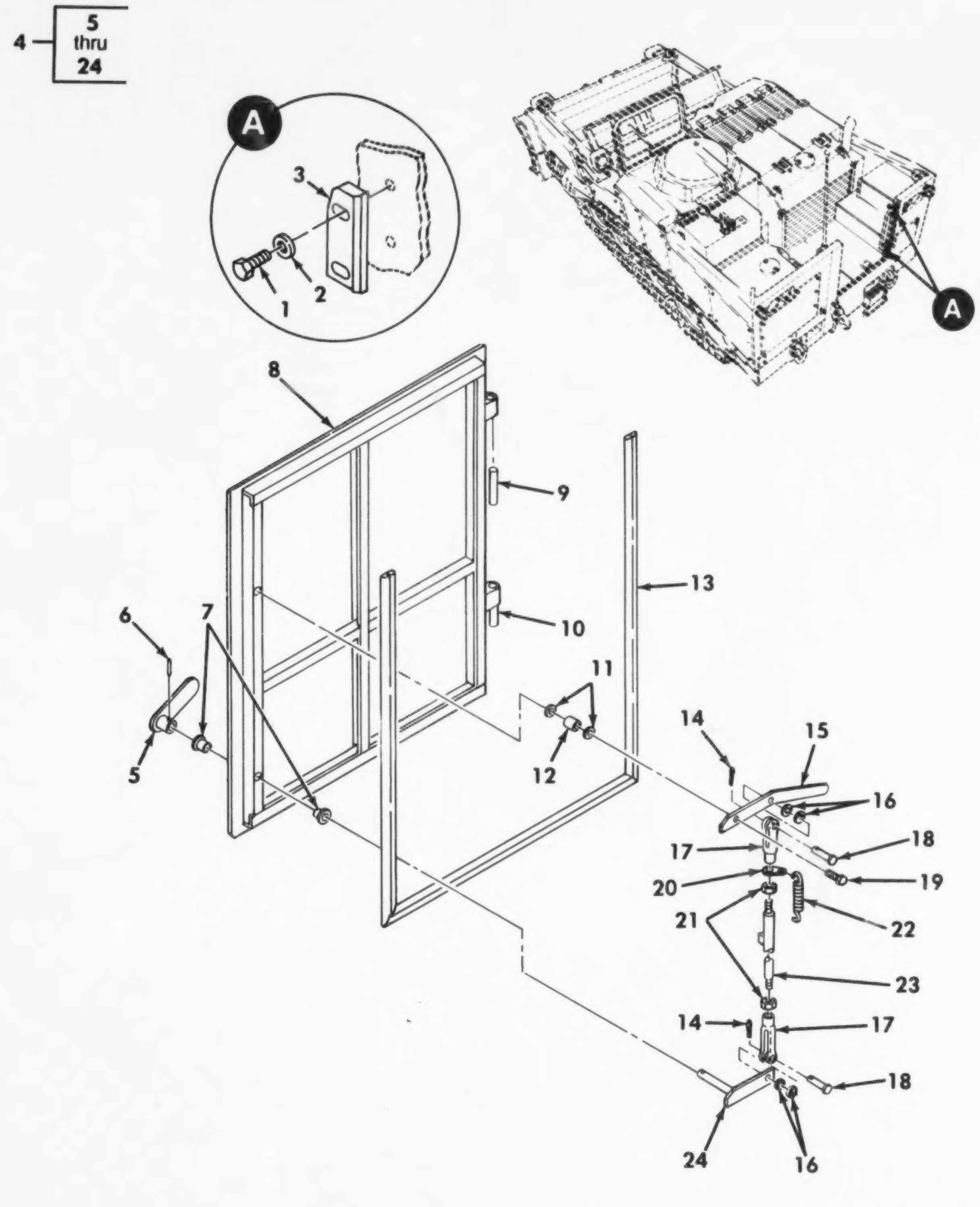

Figure 64. Rear Door Assembly and Related Parts.

(1) ITEM NO	(2) SMR CODE	(3) CAGEC	(4) PART NUMBER	(5) DESCRIPTION AND USABLE ON CODES(UOC)	(6) QTY
				GROUP AP: HULL ASSEMBLY FIG.64 REAR DOOR ASSEMBLY AND RELATED PARTS	
1	PAOZZ	96906	MS16997-60L	BOLT,SELF-LOCKING....................	4
2	PAOZZ	88044	AN960-416	WASHER,FLAT.........................	4
3	PAOZZ	19207	12334959	STOP,DOOR...........................	2
4	PBOOO	19207	12334824	DOOR,REAR ASSEMBLY..................	1
5	PFOZZ	19207	12335070	.LATCH ASSEMBLY,WIND................	1
6	PAOZZ	96906	MS16562-56	.PIN,SPRING.........................	1
7	PAOZZ	96881	10L10F	.BEARING,SLEEVE.....................	2
8	XAOZZ	19207	12334966	.DOOR...............................	1
9	PAOZZ	19207	12334951	.PIN,STRAIGHT,HEADLE................	1
10	PAOZZ	19207	12334952	.PIN,STRAIGHT,HEADLE................	1
11	PAOZZ	96906	MS27183-14	.WASHER,FLAT........................	2
12	PFOZZ	19207	12334958	.SPACER,RING........................	1
13	PAOZZ	97403	13214E2654	.SEAL,RUBBER SPECIAL................	1
14	PAOZZ	96906	MS24665-285	.PIN,COTTER.........................	2
15	PFOZZ	19207	12334960	.LATCH,UPPER........................	1
16	PAOZZ	96906	MS27183-18	.WASHER,FLAT........................	4
17	PAOZZ	96906	MS35812-6	.CLEVIS,ROD END.....................	2
18	PAOZZ	96906	MS9468-23	.PIN,STRAIGHT,HEADED................	2
19	PAOZZ	96906	MS90728-64L	.BOLT,SELF-LOCKING..................	1
20	PAOZZ	19207	12334962	.HOLDER,SPRING......................	1
21	PAOZZ	96906	MS35691-37	.NUT,PLAIN,HEXAGON..................	2
22	PAOZZ	19207	12334963	.SPRING,HELICAL,EXTE................	1
23	PFOZZ	19207	12325769	.ROD,THREADED ASSEMB................	1
24	PFOZZ	19207	12335083	.LATCH,LOWER........................	1

END OF FIGURE

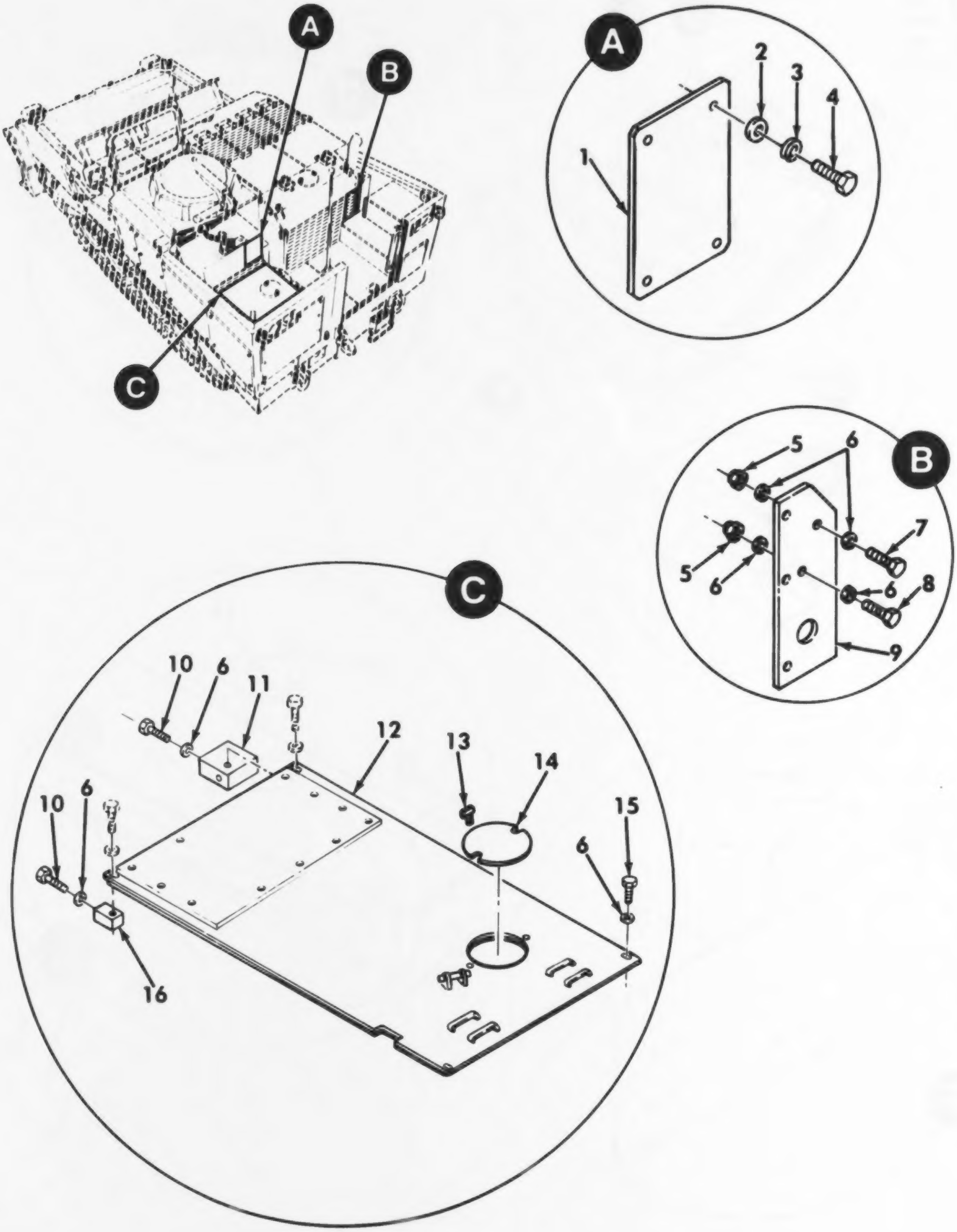

Figure 65. Miscellaneous Armor Plates and Attaching Parts (Sheet 1 of 4).

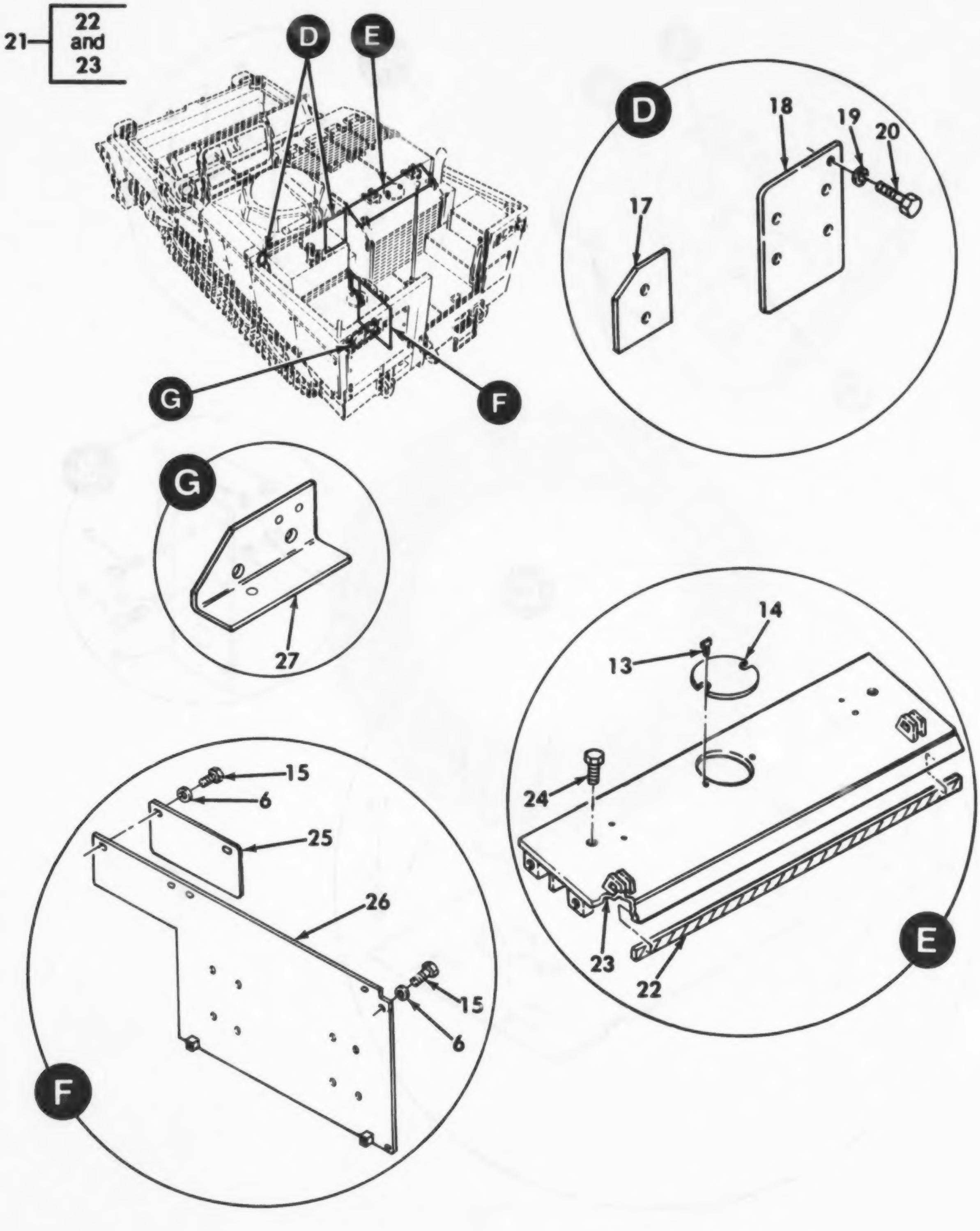

Figure 65. Miscellaneous Armor Plates and Attaching Parts (Sheet 2 of 4).

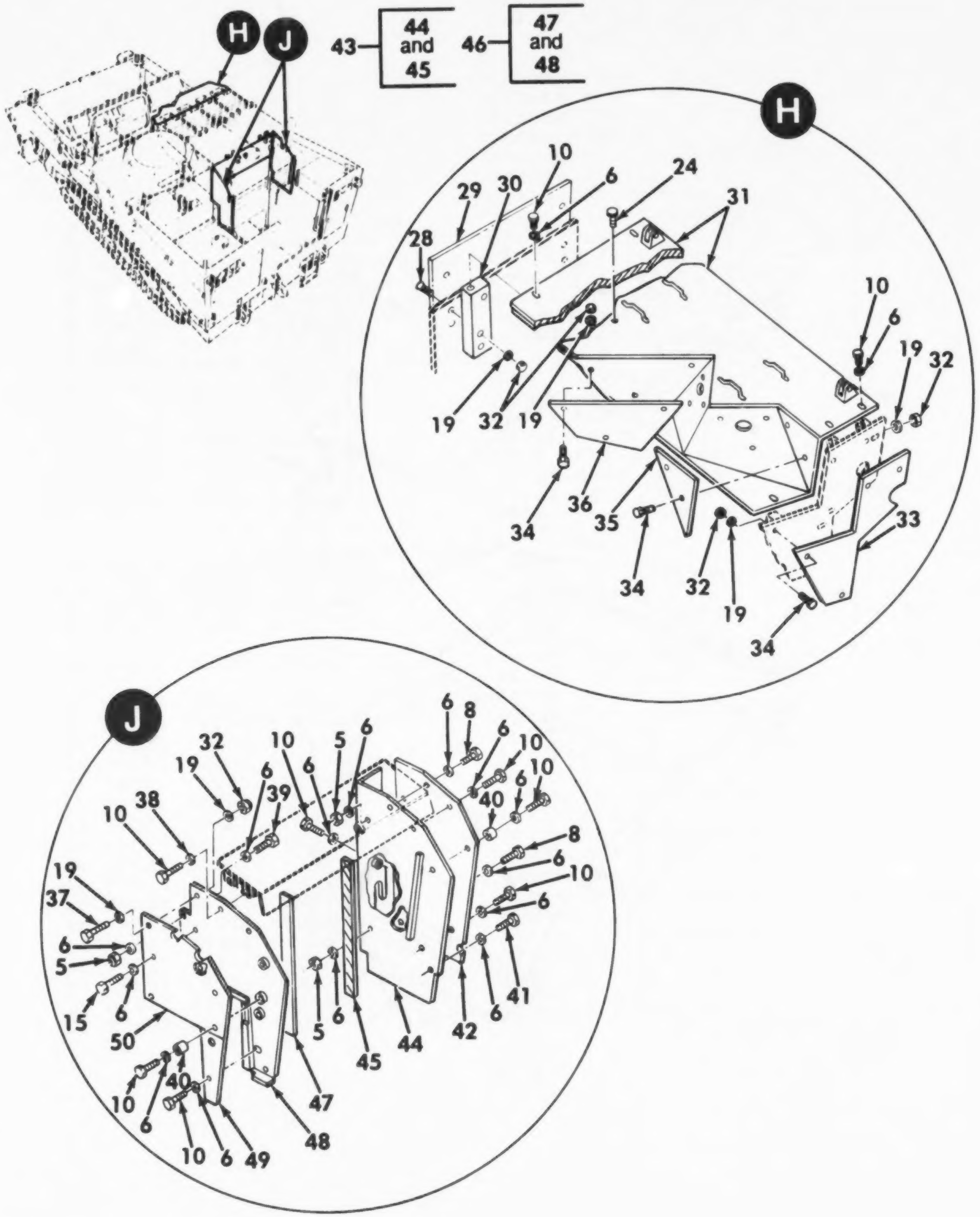

Figure 65. Miscellaneous Armor Plates and Attaching Parts (Sheet 3 of 4).

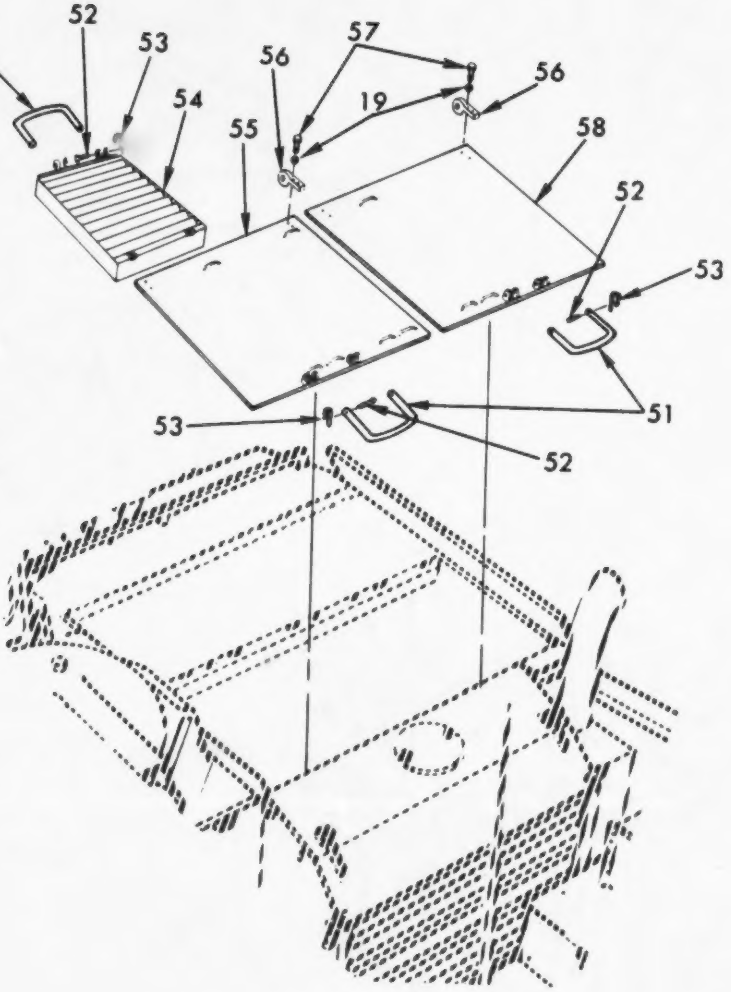

Figure 65. Miscellaneous Armor Plates and Attaching Parts (Sheet 4 of 4).

(1) ITEM NO	(2) SMR CODE	(3) CAGEC	(4) PART NUMBER	(5) DESCRIPTION AND USABLE ON CODES(UOC)	(6) QTY
				GROUP AP: HULL ASSEMBLY FIG.65 MISCELLANEOUS ARMOR PLATES AND ATTACHING PARTS	
1	PBOZZ	19207	12331837	ARMOR PLATE	1
2	PAOZZ	96906	MS27183-10	WASHER,FLAT	4
3	PAOZZ	02614	N405P41B6	WASHER,LOCK	4
4	PAOZZ	96906	MS35206-283	SCREW,MACHINE	4
5	PAOZZ	96906	MS51922-33	NUT,SELF-LOCKING,HE	9
6	PAOZZ	96906	MS27183-18	WASHER,FLAT	45
7	PAOZZ	96906	MS90728-116	SCREW,CAP,HEXAGON H	1
8	PAOZZ	96906	MS90728-113	SCREW,CAP,HEXAGON H	6
9	PBOZZ	19207	12335422	ARMOR PLATE	1
10	PAOZZ	96906	MS90728-113L	BOLT,SELF-LOCKING	16
11	PFOZZ	19207	12369153	BRACKET,EYE,ROTATIN	1
12	PBOZZ	19207	12362099	COVER,FUEL,TANK	1
13	PAOZZ	19207	12334999	THUMBSCREW	4
14	PFOZZ	19207	12332582	COVER,ACCESS	2
15	PAOZZ	96906	MS90728-111L	BOLT,SELF-LOCKING	8
16	PFOZZ	19207	12369152	BRACKET,EYE,ROTATIN	1
17	PFOZZ	19207	12352559	ARMOR PLATE	1
18	PFOZZ	19207	12352679	ARMOR PLATE	1
19	PAOZZ	96906	MS27183-14	WASHER,FLAT	24
20	PAOZZ	96906	MS51095-358L	BOLT,SELF-LOCKING	1
21	PFOOO	19207	12357185-1	ARMOR SUPPLEMENTAL	1
22	MOOZZ	19207	12355368-3	.TAPE,HOOK MAKE FROM FASTENER HOOK TAPE,P/N M21840TYPE1A,CL1,1.00W, BLK3230	1
23	XAOZZ	19207	12325729	.COVER	1
24	PAOZZ	96906	MS90728-104	SCREW,CAP,HEXAGON H	4
25	PFOZZ	19207	12331836	ARMOR PLATE	1
26	PFOZZ	19207	12357425	ARMOR,SUPPLEMENTAL, USBL S/N EFF 1 THRU 37	1
26	PFOZZ	19207	12362073	ARMOR,SUPPLEMENTAL, USBL S/N EFF 38 AND UP	1
27	PBOZZ	19207	12325856	ARMOR PLATE	1
28	PAOZZ	96906	MS24667-56	SCREW,CAP,SOCKET HE	4
29	PFOZZ	19207	12355529	PLATE,FILLER	1
30	PFOZZ	19207	12355521	BRACKET SUPPORT	2
31	PBOZZ	19207	12362100	COWLING,ARMORED	1
32	PAOZZ	96906	MS51922-17	NUT,SELF-LOCKING,HE	14
33	PFOZZ	19207	12335438	ARMOR PLATE	1
34	PAOZZ	96906	MS90728-62	SCREW,CAP,HEXAGON H	9
35	PFOZZ	19207	12334811	ARMOR PLATE	1
36	PFOZZ	19207	12334912	ARMOR PLATE	1
37	PAOZZ	96906	MS90728-62	SCREW,CAP,HEXAGON H	1
38	PAOZZ	96906	MS9320-15	WASHER,FLAT	2
39	PAOZZ	96906	MS90728-114	SCREW,CAP,HEXAGON H	2
40	PAOZZ	19207	12334842	SPACER,SLEEVE	4
41	PAOZZ	96906	MS90728-112L	BOLT,SELF-LOCKING	2
42	PFOZZ	19207	12352512	ARMOR PLATE	1
43	PFOOO	19207	12352521-1	ARMOR PLATE ASSY	1

(1) ITEM NO	(2) SMR CODE	(3) CAGEC	(4) PART NUMBER	(5) DESCRIPTION AND USABLE ON CODES(UOC)	(6) QTY
44	XAOZZ	19207	12352521-2	.ARMOR PLATE...........................	1
45	MOOZZ	19207	12355369-3	.TAPE,HOOK MAKE FROM FASTENER HOOK TAPE,P/N M21840TYPE1A,CL1,1.50W, BLK3230............................	1
46	PBOOO	19207	12335428-1	ARMOR PLATE ASSY.......................	1
47	MOOZZ	19207	12355369-3	.TAPE,HOOK MAKE FROM FASTENER HOOK TAPE,P/N M21840TYPE1A,CL1,1.50W, BLK3230............................	1
48	XAOZZ	19207	12335428-2	.ARMOR PLATE...........................	1
49	PBOZZ	19207	12334772	ARMOR PLATE............................	1
50	PFOZZ	19207	12325759	ARMOR PLATE............................	1
51	PAOZZ	19207	12357227	HANDLE,HULL............................	6
52	PAOZZ	96906	MS20392-5C43	PIN,STRAIGHT,HEADED....................	12
53	PAOZZ	96906	MS9245-46	PIN,COTTER.............................	12
54	PFOZZ	19207	12335442	GRILLE,RADIATOR,VEH....................	4
55	PBOZZ	19207	12362101	DOOR,ACCESS............................	1
56	PAOZZ	19207	12357364	BRACKET,EYE,ROTATIN....................	4
57	PAOZZ	96906	MS90728-64L	BOLT,SELF-LOCKING......................	8
58	PBOZZ	19207	12362102	DOOR,ACCESS............................	1

END OF FIGURE

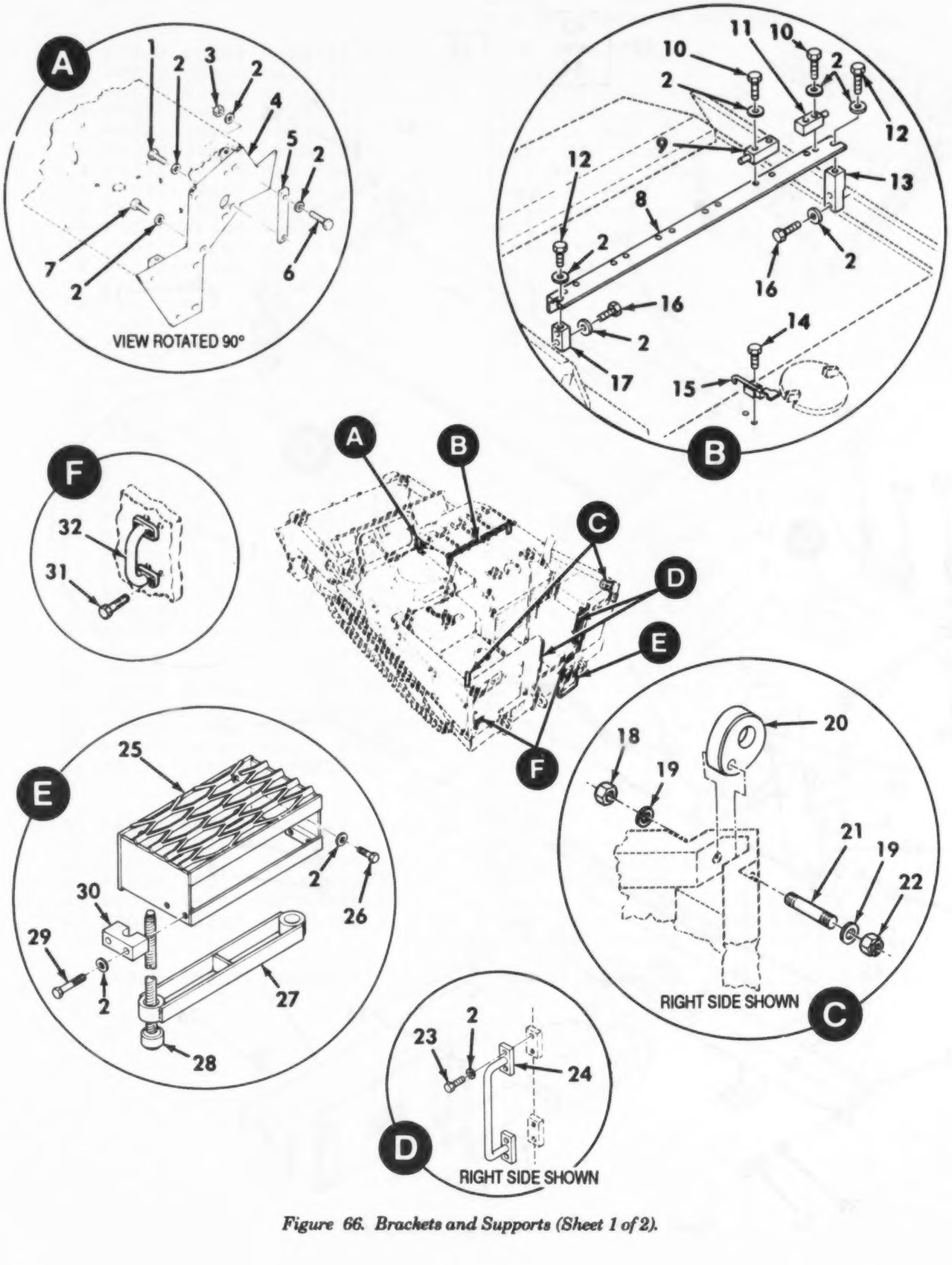

Figure 66. Brackets and Supports (Sheet 1 of 2).

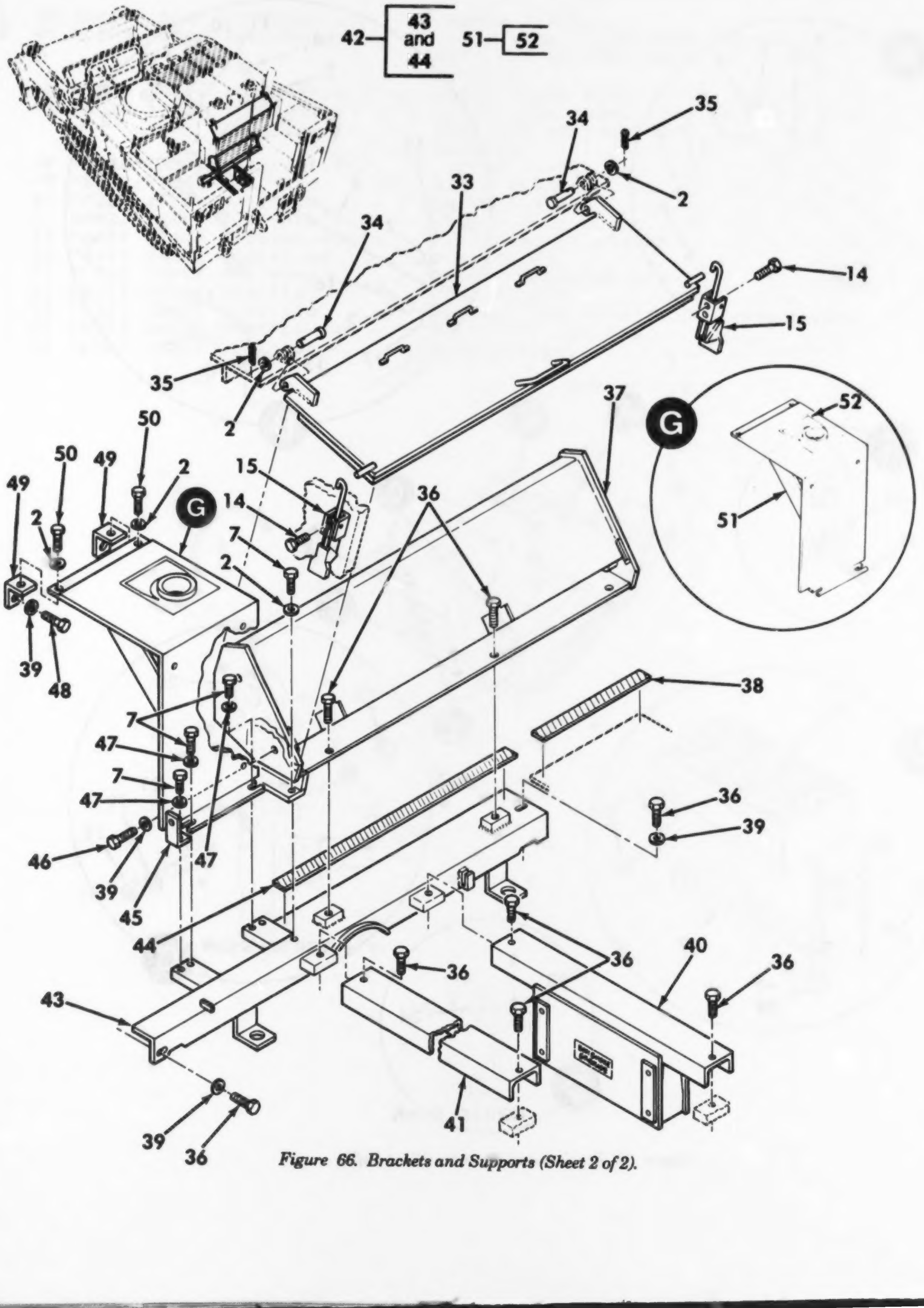

Figure 66. Brackets and Supports (Sheet 2 of 2).

(1) ITEM NO	(2) SMR CODE	(3) CAGEC	(4) PART NUMBER	(5) DESCRIPTION AND USABLE ON CODES(UOC)	(6) QTY
				GROUP AP: HULL ASSEMBLY FIG.66 BRACKETS AND SUPPORTS	
1	PAOZZ	96906	MS90728-67L	BOLT,SELF-LOCKING	1
2	PAOZZ	96906	MS27183-14	WASHER,FLAT	49
3	PAOZZ	96906	MS51922-17	NUT,SELF-LOCKING,HE	1
4	PFOZZ	19207	12357183	PANEL,BODY,VEHICULA	1
5	PFOZZ	19207	12335426	BAR,HULL PAD	1
6	PAOZZ	96906	MS90725-67	SCREW,CAP,HEXAGON H	1
7	PAOZZ	96906	MS90728-62L	BOLT,SELF-LOCKING	9
8	PFOZZ	19207	12335424	ANGLE,SUPPORT	1
9	PAOZZ	19207	12352522	HINGE,HANDLE,HULL G	2
10	PAOZZ	96906	MS90728-65L	BOLT,SELF-LOCKING	12
11	PAOZZ	19207	12335430	HINGE,END	4
12	PAOZZ	96906	MS90728-61L	BOLT,SELF-LOCKING	2
13	PFOZZ	19207	12325803	BLOCK,MOUNTING	1
14	PAOZZ	96906	MS90728-2L	BOLT,SELF-LOCKING	8
15	PAOZZ	94222	A1-99-134-70	LATCH	2
16	PAOZZ	96906	MS90728-68L	SCREW,CAP,HEXAGON	4
17	PFOZZ	19207	12335420	BLOCK,MOUNTING	1
18	PAOZZ	96906	MS35691-73	NUT,PLAIN,HEXAGON	2
19	PAOZZ	96906	MS27183-27	WASHER,FLAT	4
20	PAOZZ	19207	12355496	EYE,SUSPENSION	2
21	PAOZZ	19207	12355497	STUD,PLAIN	2
22	PAOZZ	96906	MS51922-72	NUT,SELF-LOCKING,HE	2
23	PAOZZ	96906	MS90728-60L	BOLT,SELF-LOCKING	8
24	PAOZZ	19207	12357203	HANDLE,BOW	2
25	PAOZZ	19207	12332092	STEP,REAR	1
26	PAOZZ	96906	MS51095-360L	BOLT,SELF-LOCKING	4
27	PAOZZ	19207	12352503	RUNG	1
28	PAOZZ	19207	12332369	WIRE ROPE ASSEMBLY	2
29	PAOZZ	96906	MS90728-66L	BOLT,SELF-LOCKING	4
30	PAOZZ	19207	12352511	FAIRLEAD HALF,TUBUL	2
31	PAOZZ	96906	MS90728-114L	BOLT,SELF-LOCKING	8
32	PFOZZ	97403	13211E9062	BRACKET,TIE DOWN	2
33	PFOZZ	19207	12355311	DOOR,METAL,SWINGING	1
34	PAOZZ	96906	MS20392-5C43	PIN,STRAIGHT,HEADED	2
35	PAOZZ	96906	MS9245-46	PIN,COTTER	2
36	PAOZZ	96906	MS90728-111L	BOLT,SELF-LOCKING	8
37	PFOZZ	19207	12357366	GRILLE,BOTTOM	1
38	MOOZZ	19207	12355369-1	TAPE,HOOK MAKE FROM FASTENER HOOK TAPE,P/N M21840TYPE1A,CL1,1.50W, BLK3230	V
39	PAOZZ	96906	MS27183-18	WASHER,FLAT	5
40	PFOZZ	19207	12352487	BEAM ASSEMBLY	1
41	PFOZZ	19207	12325819	BRACKET,VEHICULAR C	1
42	PFOOO	19207	12352545-1	FRAME,STRUCTURAL,VE	1
43	XAOZZ	19207	12352545-2	.BEAM	1
44	MOOZZ	19207	12355369-4	.TAPE,HOOK MAKE FROM FASTENER HOOK TAPE,P/N M21840TYPE1A,CL1,1.50W, BLK3230	1
45	PFOZZ	19207	12332572	BRACKET,ANGLE	1

(1) ITEM NO	(2) SMR CODE	(3) CAGEC	(4) PART NUMBER	(5) DESCRIPTION AND USABLE ON CODES(UOC)	(6) QTY
46	PAOZZ	96906	MS90728-112L	BOLT, SELF-LOCKING....................	1
47	PAOZZ	96906	MS9320-12	WASHER, FLAT............................	3
48	PAOZZ	96906	MS90728-113L	BOLT, SELF-LOCKING....................	2
49	PFOZZ	19207	12332562	BRACKET, ANGLE........................	2
50	PAOZZ	96906	MS51095-361L	BOLT, SELF-LOCKING....................	2
51	PBOOO	19207	12362092	STEP, VEHICULAR........................	1
52	PFOZZ	19207	12325754	.PLATE, INSTRUCTION..................	1

END OF FIGURE

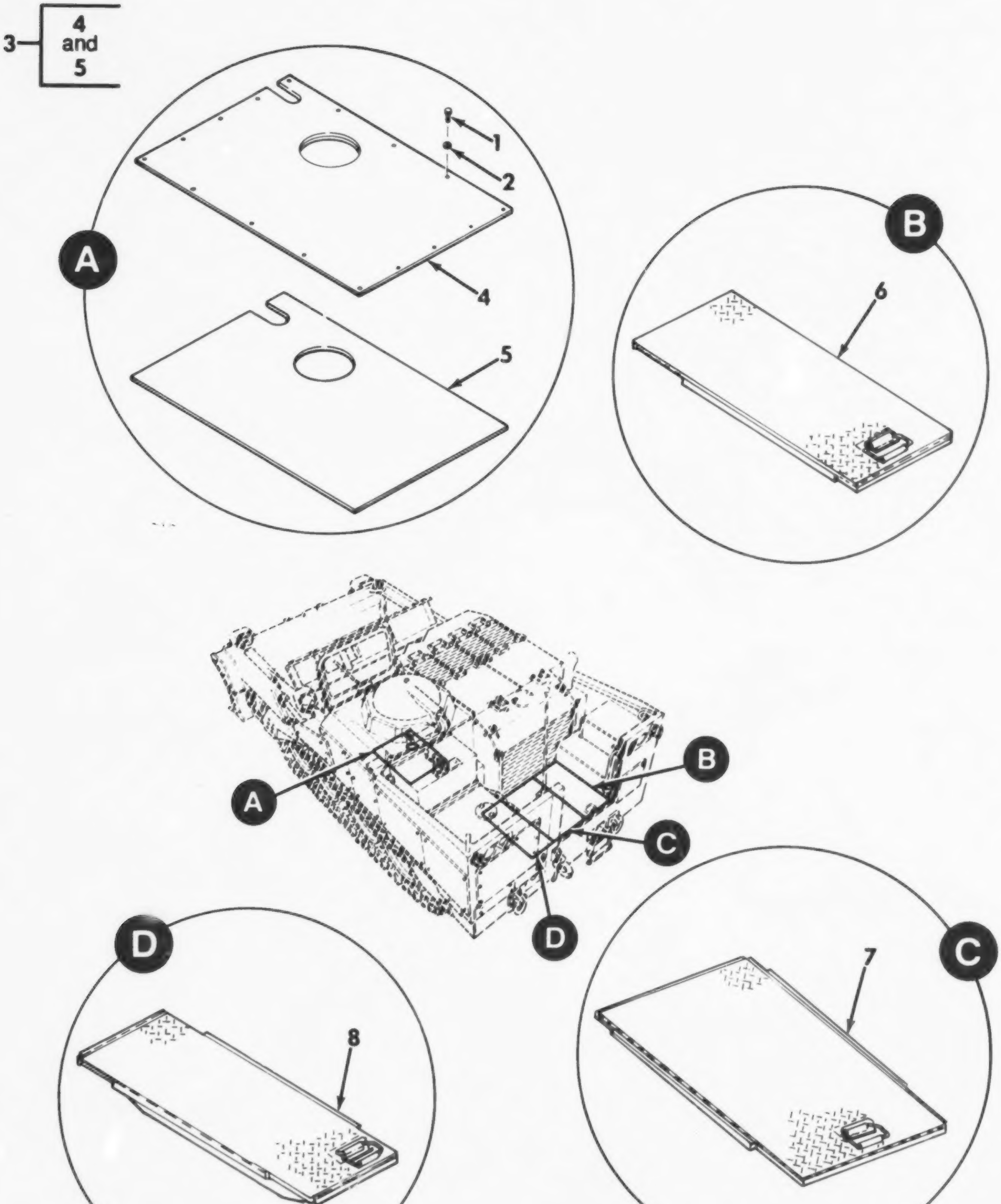

Figure 67. Floors.

(1) ITEM NO	(2) SMR CODE	(3) CAGEC	(4) PART NUMBER	(5) DESCRIPTION AND USABLE ON CODES(UOC)	(6) QTY
				GROUP AP: HULL ASSEMBLY FIG.67 FLOORS	
1	PAOZZ	96906	MS51095-360L	BOLT,SELF-LOCKING....................	16
2	PAOZZ	96906	MS27183-14	WASHER,FLAT..........................	16
3	PFOOO	19207	12355325	FLOOR,INSULATED......................	1
4	XAOZZ	19207	12355324	.PLATE,FLOOR.........................	1
5	PAOZZ	19207	12334664	.INSULATION BLANKET..................	1
6	PBOZZ	19207	12362094	FLOOR,ARMORED RIGHT..................	1
7	PBOZZ	19207	12362096	FLOOR,ARMORED CENTE..................	1
8	PBOZZ	19207	12362095	FLOOR,ARMORED LEFT...................	1

END OF FIGURE

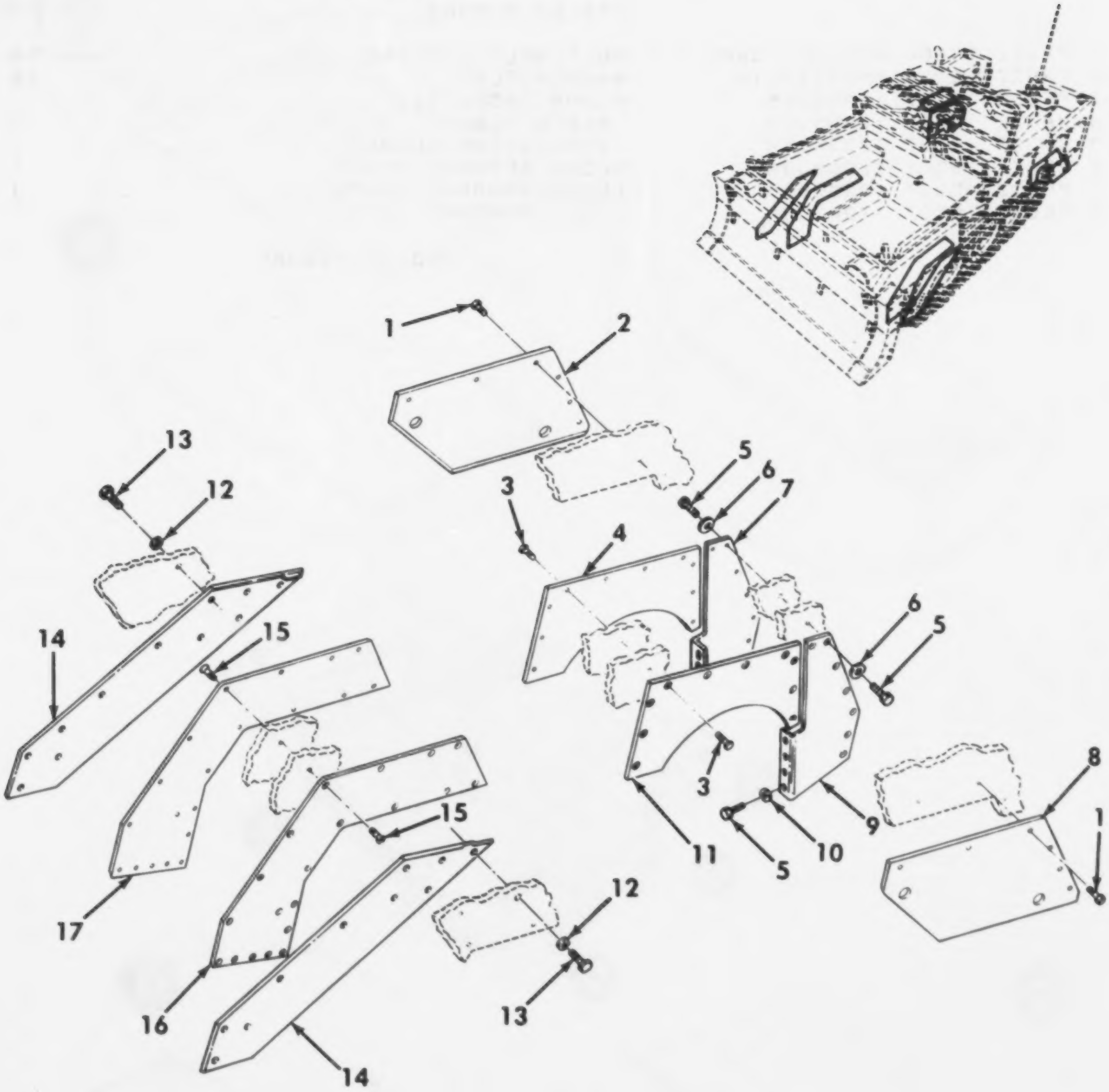

Figure 68. Track Retainers and Wear Plates.

(1) ITEM NO	(2) SMR CODE	(3) CAGEC	(4) PART NUMBER	(5) DESCRIPTION AND USABLE ON CODES(UOC)	(6) QTY
				GROUP AP: HULL ASSEMBLY FIG.68 TRACK RETAINERS AND WEAR PLATES	
1	PAOZZ	96906	MS90725-186	SCREW,CAP,HEXAGON H...................	12
2	PBOZZ	19207	12355514-2	FRAME SECTION,STRUC...................	1
3	PAOZZ	96906	MS90728-58L	BOLT,SELF-LOCKING.....................	20
4	PAOZZ	97403	13211E8671	PLATE,ACCESS,FINAL....................	1
5	PAOZZ	96906	MS90728-62	SCREW,CAP,HEXAGON H...................	22
6	PAOZZ	19207	12379433	WASHER,FLAT...........................	14
7	PAOZZ	19207	12367693	SHIELD ASSY,WEAR RH...................	1
8	PFOZZ	19207	12355514-1	RETAINER,TRACK,LH.....................	1
9	PAOZZ	19207	12367692	SHIELD ASSY,WEAR LH...................	1
10	PAOZZ	19200	10910174-16	WASHER,FLAT...........................	8
11	PAOZZ	97403	13211E8639	PLATE,WEAR,TRACK......................	1
12	PAOZZ	96906	MS27183-18	WASHER,FLAT...........................	22
13	PAOZZ	96906	MS90727-108	SCREW,CAP,HEXAGON H...................	22
14	PAOZZ	19207	12367729	PLATE,MOUNTING,FLAT RETAINER.......	2
15	PAOZZ	96906	MS24667-52L	SCREW,SELF-LOCKING....................	40
16	PAOZZ	97403	13214E2603	PLATE,WEAR,TRACK......................	1
17	PAOZZ	97403	13214E2601	PLATE,WEAR,TRACK......................	1

END OF FIGURE

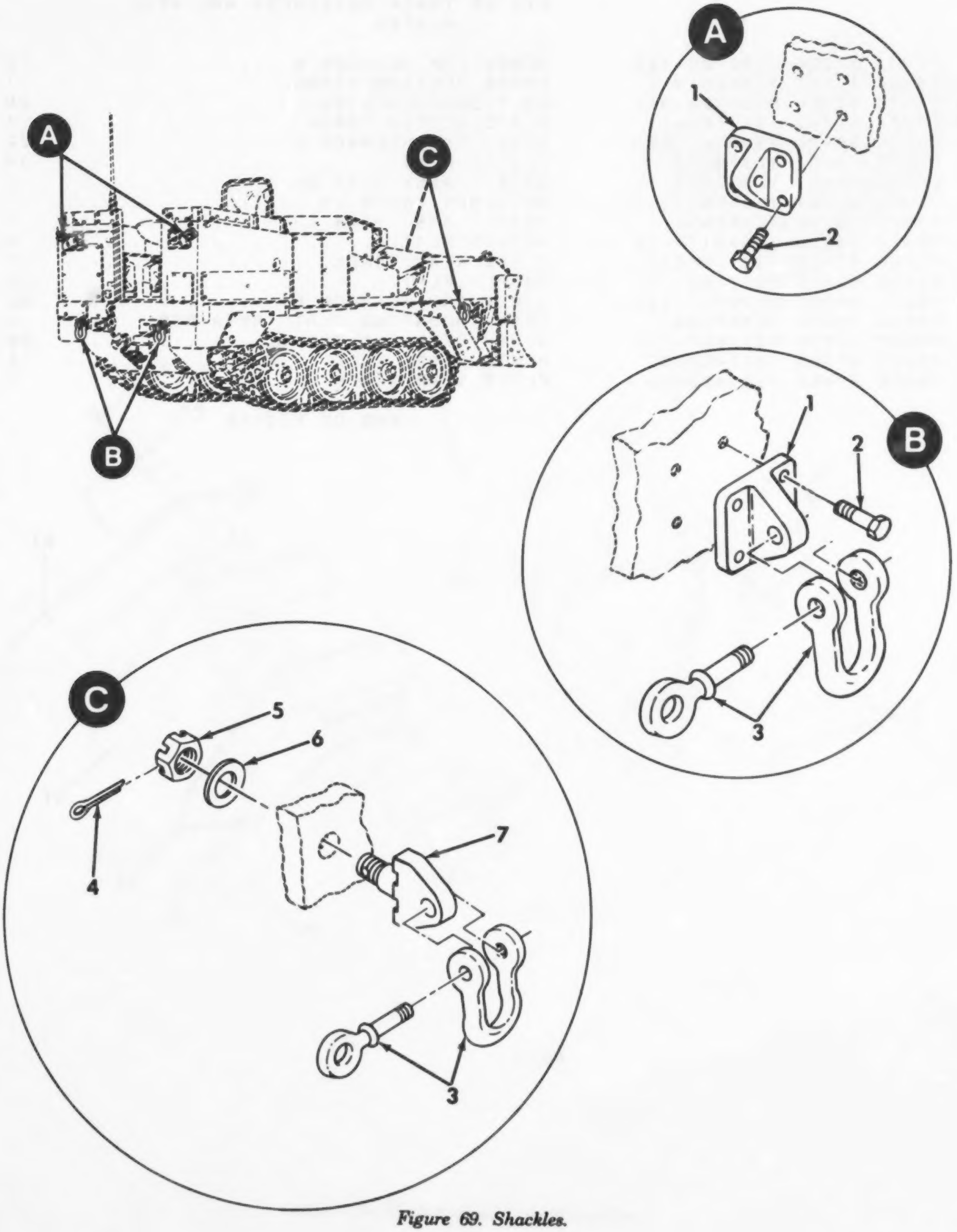

Figure 69. Shackles.

(1) ITEM NO	(2) SMR CODE	(3) CAGEC	(4) PART NUMBER	(5) DESCRIPTION AND USABLE ON CODES(UOC)	(6) QTY
				GROUP AP: HULL ASSEMBLY FIG.69 SHACKLES	
1	PAOZZ	19207	12357409	BRACKET,TOW HOOK....................	4
2	PAOZZ	96906	MS90728-232L	BOLT,SELF-LOCKING...................	16
3	PAOZZ	19207	12355445	SHACKLE.............................	4
4	PAOZZ	46717	L6451-101	PIN,COTTER..........................	2
5	PAOZZ	19207	7714911	NUT,PLAIN,SLOTTED,H.................	2
6	PAOZZ	97403	13214E2475	WASHER FLAT.........................	2
7	PAOZZ	19207	12357408	BOLT,TEE HEAD.......................	2

END OF FIGURE

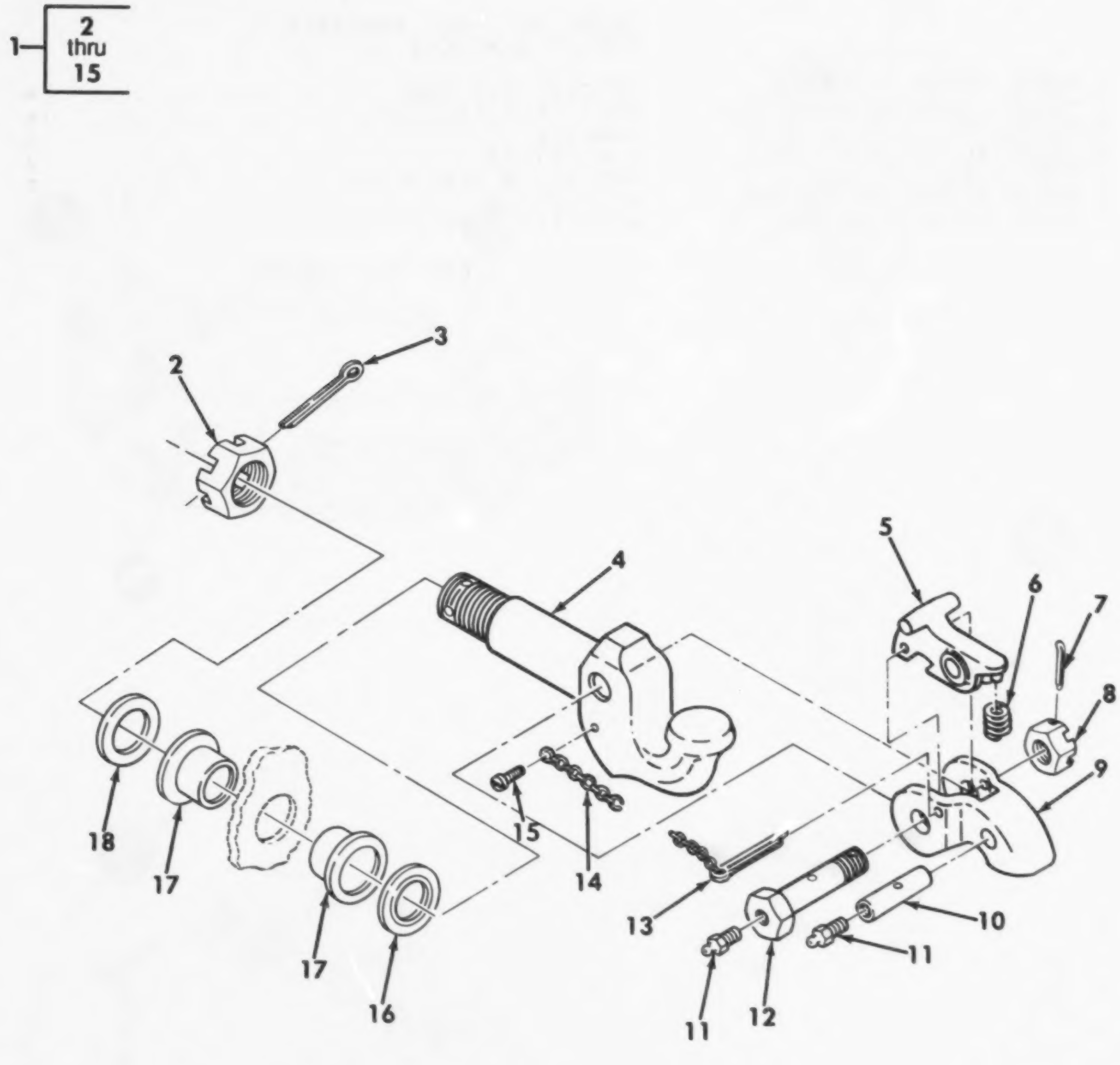

Figure 70. Pintle Hook Assembly and Related Parts.

(1) ITEM NO	(2) SMR CODE	(3) CAGEC	(4) PART NUMBER	(5) DESCRIPTION AND USABLE ON CODES(UOC)	(6) QTY
				GROUP AP: HULL ASSEMBLY FIG.70 PINTLE HOOK ASSEMBLY AND RELATED PARTS	
1	PAOOO	19207	8710630	PINTLE ASSEMBLY,TOW	1
2	PAOZZ	19207	7714911	.NUT,PLAIN,SLOTTED,H	1
3	PAOZZ	46717	L6451-101	.PIN,COTTER	1
4	XAOZZ	19207	8710626	.HOOK,PINTLE	1
5	XAOZZ	19207	7714880	.LATCH,PINTLE HOOK	1
6	XAOZZ	19207	7044253	.SPRING,HELICAL,COMP	1
7	PAOZZ	96906	MS24665-359	.PIN,COTTER	1
8	PAOZZ	19207	5005864	.NUT,PLAIN,SLOTTED,H	1
9	XAOZZ	19207	8710627	.LATCH,PINTLE HOOK	1
10	XAOZZ	19207	8710629	.SHAFT,STRAIGHT	1
11	PAOZZ	96906	MS15001-1	.FITTING,LUBRICATION	2
12	XAOZZ	19207	8710628	.BOLT,FLUID PASSAGE	1
13	PAOZZ	96906	MS24665-631	.PIN,COTTER	1
14	MOOZZ	81348	RRC271	.CHAIN MAKE FROM CHAIN,P/N C43974	V
15	PAOZZ	96906	MS21318-47	.SCREW,DRIVE	1
16	PAOZZ	97403	13211E8627	WASHER,RECESSED	1
17	PAOZZ	97403	13211E8648	BUSHING,SLEEVE	2
18	PAOZZ	97403	13214E2475	WASHER,FLAT	1

END OF FIGURE

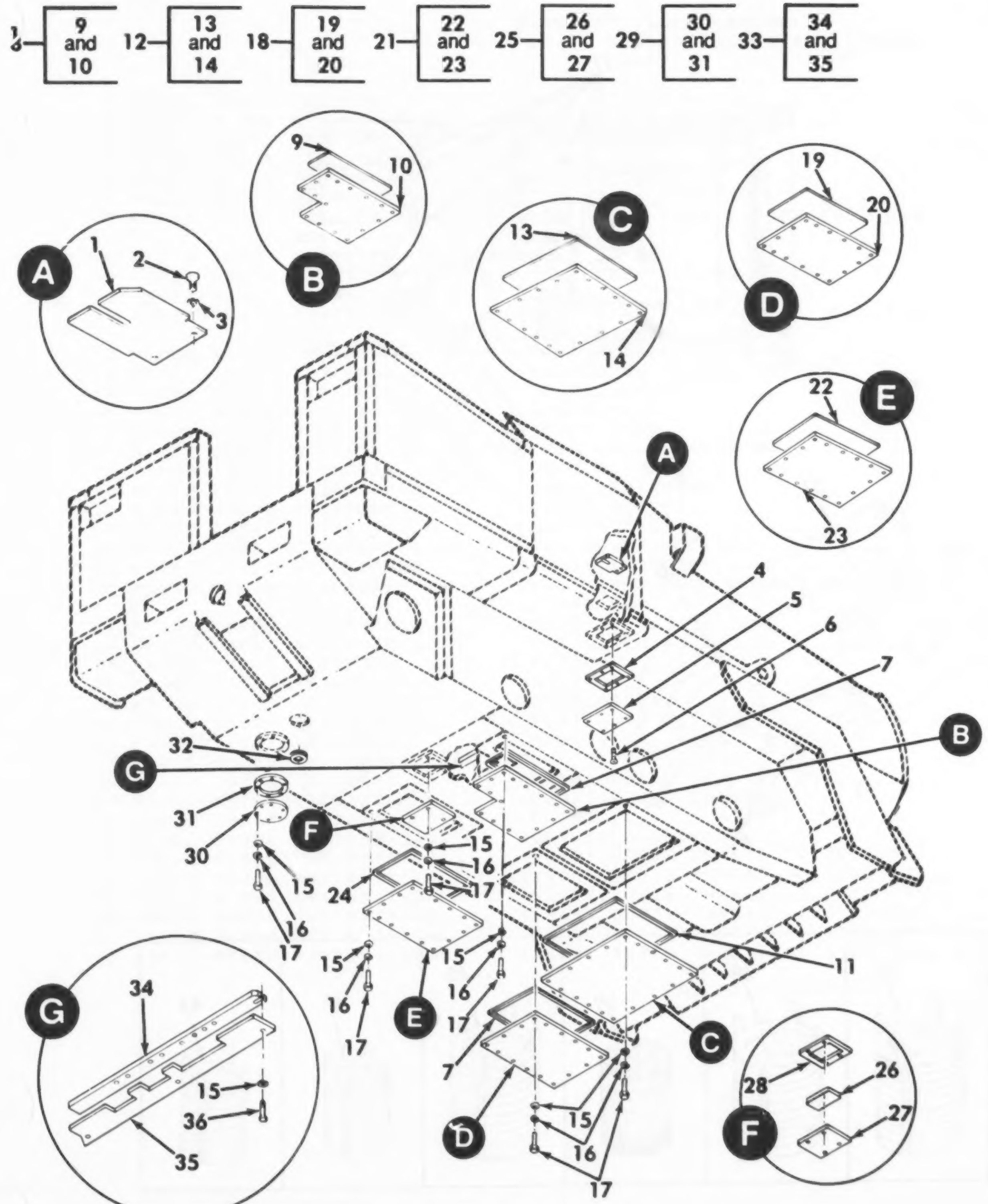

Figure 71. Access Covers and Thread Inserts (Sheet 1 of 2).

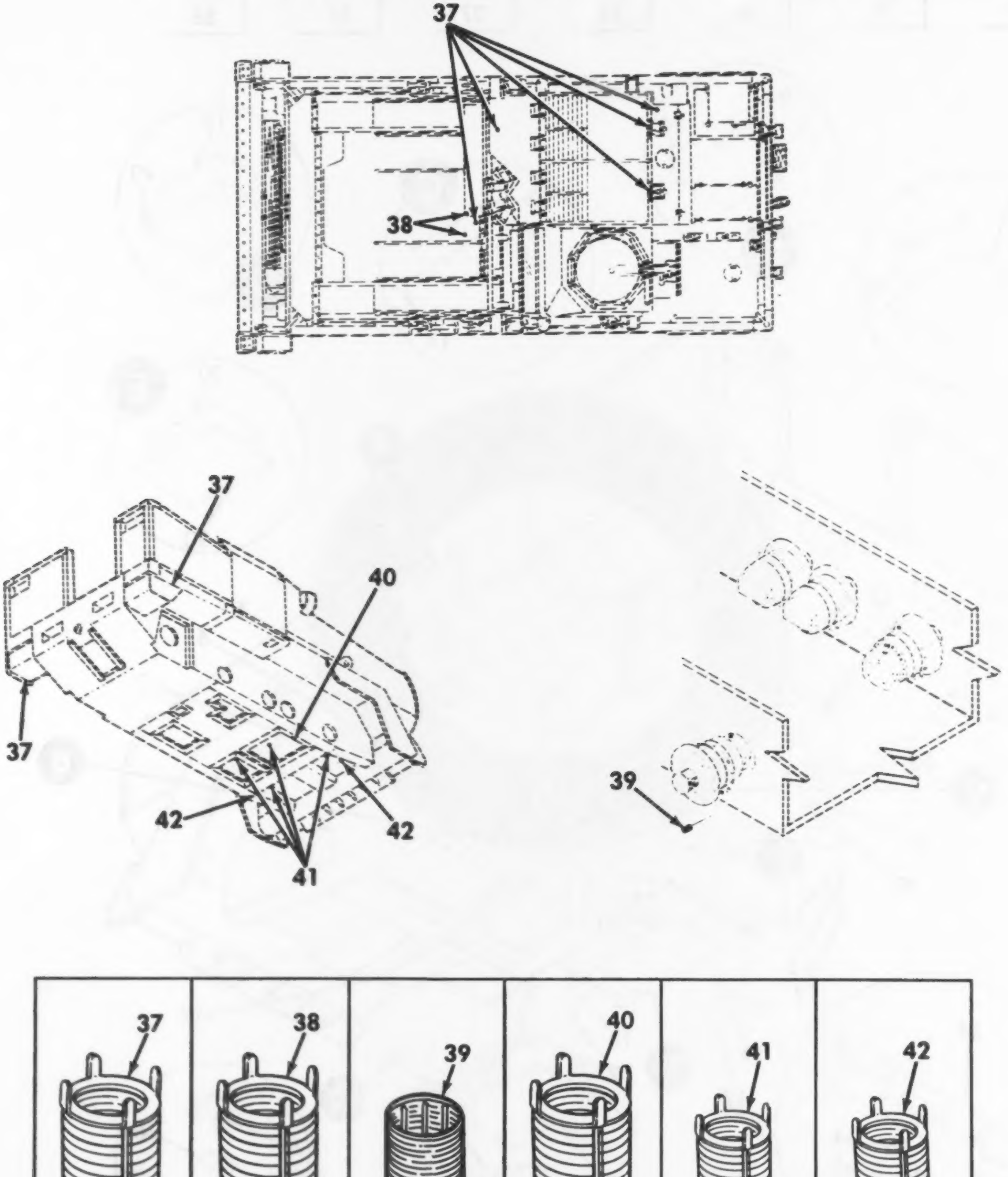

Figure 71. Access Covers and Thread Inserts (Sheet 2 of 2).

(1) ITEM NO	(2) SMR CODE	(3) CAGEC	(4) PART NUMBER	(5) DESCRIPTION AND USABLE ON CODES(UOC)	(6) QTY
				GROUP AP: HULL ASSEMBLY	
				FIG.71 ACCESS COVERS AND THREAD INSERTS	
1	PFOZZ	19207	12335327	COVER,ACCESS	2
2	PAOZZ	96906	MS51095-306L	BOLT,SELF-LOCKING	4
3	PAOZZ	96906	MS27183-10	WASHER,FLAT	4
4	PAOZZ	97403	13211E9386	GASKET	2
5	PFOZZ	97403	13211E9387	COVER,ACCESS	2
6	PAOZZ	96906	MS24667-29L	SCREW,SELF-LOCKING	12
7	MOOZZ	97403	13204E2894-2	SEAL MAKE FROM RUBBER SEAL,P/N 13204E2894	2
8	PFOOO	19207	12352550	COVER,ACCESS	1
9	PFOZZ	19207	12335454	.PAD,COVER ACCESS	1
10	XAOZZ	97403	13214E2325	.COVER,ACCESS	1
11	MOOZZ	97403	13204E2894-1	SEAL MAKE FROM RUBBER SEAL,P/N 13204E2894	1
12	PBOOO	19207	12352551	COVER,ACCESS	1
13	PFOZZ	19207	12352546-4	.PAD,COVER ACCESS	1
14	XAOZZ	97403	13211E8625	.COVER,ACCESS	1
15	PAOZZ	96906	MS27183-14	WASHER,FLAT	81
16	PAOZZ	96906	MS35338-46	WASHER,LOCK	78
17	PAOZZ	96906	MS18154-60	SCREW,CAP,HEXAGON H	78
18	PFOOO	19207	12352552	COVER,ACCESS	1
19	PFOZZ	19207	12352546-3	.PAD,CUSHIONING	1
20	XAOZZ	97403	13211E8624	.COVER,ACCESS	1
21	PFOOO	19207	12352549	COVER,ACCESS	1
22	PFOZZ	19207	12352546-2	.PAD,COVER ACCESS	1
23	XAOZZ	97403	13214E2326	.COVER,ACCESS	1
24	MOOZZ	97403	13204E2894-3	SEAL MAKE FROM RUBBER SEAL,P/N 13204E2894	1
25	PFOOO	19207	12335460	COVER,ACCESS	1
26	PFOZZ	19207	12352546-1	.PAD,COVER ACCESS	1
27	XAOZZ	19207	12335256	.PLATE	1
28	PAOZZ	19207	12335257	GASKET	1
29	PFOOO	97403	13214E2760	COVER,ACCESS	1
30	XAOZZ	19207	12335258	.PLATE	1
31	PAOZZ	19207	12335259	.GASKET	1
32	PAOZZ	81348	WW-P-471ACBBCN	PLUG,PIPE	1
33	PFOOO	19207	12332229	COVER,ACCESS	1
34	PAOZZ	19207	12332228	.PLASTIC,PAD CUSHION	1
35	XAOZZ	19207	12332227	.PLATE	1
36	PAOZZ	96906	MS51095-360L	BOLT,SELF-LOCKING	3
37	PAFZZ	96906	MS51831A109L	INSERT,SCREW THREAD (.7500-10)	17
38	PAFZZ	96906	MS51831A106L	INSERT,SCREW THREAD (.5000-13)	2
39	PAFZZ	81349	M45932/1-39L	INSERT,SCREW THREAD (.6250-11)	112
40	PAFZZ	96906	MS51830A108L	INSERT,SCREW THREAD (.3750-16)	72
41	PAFZZ	96906	MS51831A104L	INSERT,SCREW THREAD (.3750-16)	12
42	PAFZZ	96906	MS51831A203L	INSERT,SCREW THREAD (.3125-24)	8

END OF FIGURE

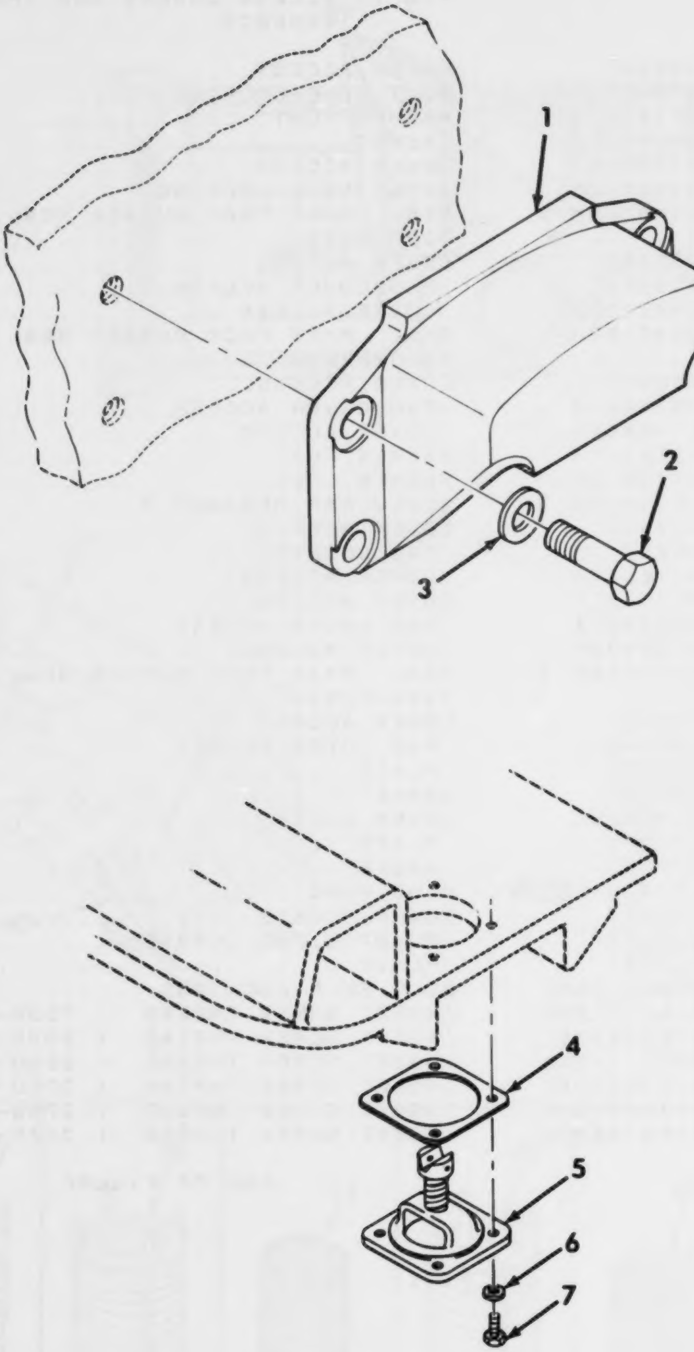

Figure 72. Rear Bump Stop, Hull Drain Valve, and Mounting Hardware.

(1) ITEM NO	(2) SMR CODE	(3) CAGEC	(4) PART NUMBER	(5) DESCRIPTION AND USABLE ON CODES(UOC)	(6) QTY
				GROUP AP: HULL ASSEMBLY FIG.72 REAR BUMP STOP, HULL DRAIN VALVE, AND MOUNTING HARDWARE	
1	PFOZZ	97403	13211E9245	BRACKET,BUMP STOP	2
2	PAOZZ	96906	MS90728-163L	BOLT,SELF-LOCKING	8
3	PAOZZ	96906	MS27183-21	WASHER,FLAT	8
4	PAOZZ	19207	10902609	GASKET	1
5	XDOZZ	19207	12367699	VALVE ASSEMBLY POPP	1
6	PAOZZ	96906	MS27183-14	WASHER,FLAT	4
7	PAOZZ	96906	MS90728-60L	BOLT,SELF-LOCKING	4

END OF FIGURE

best copy available

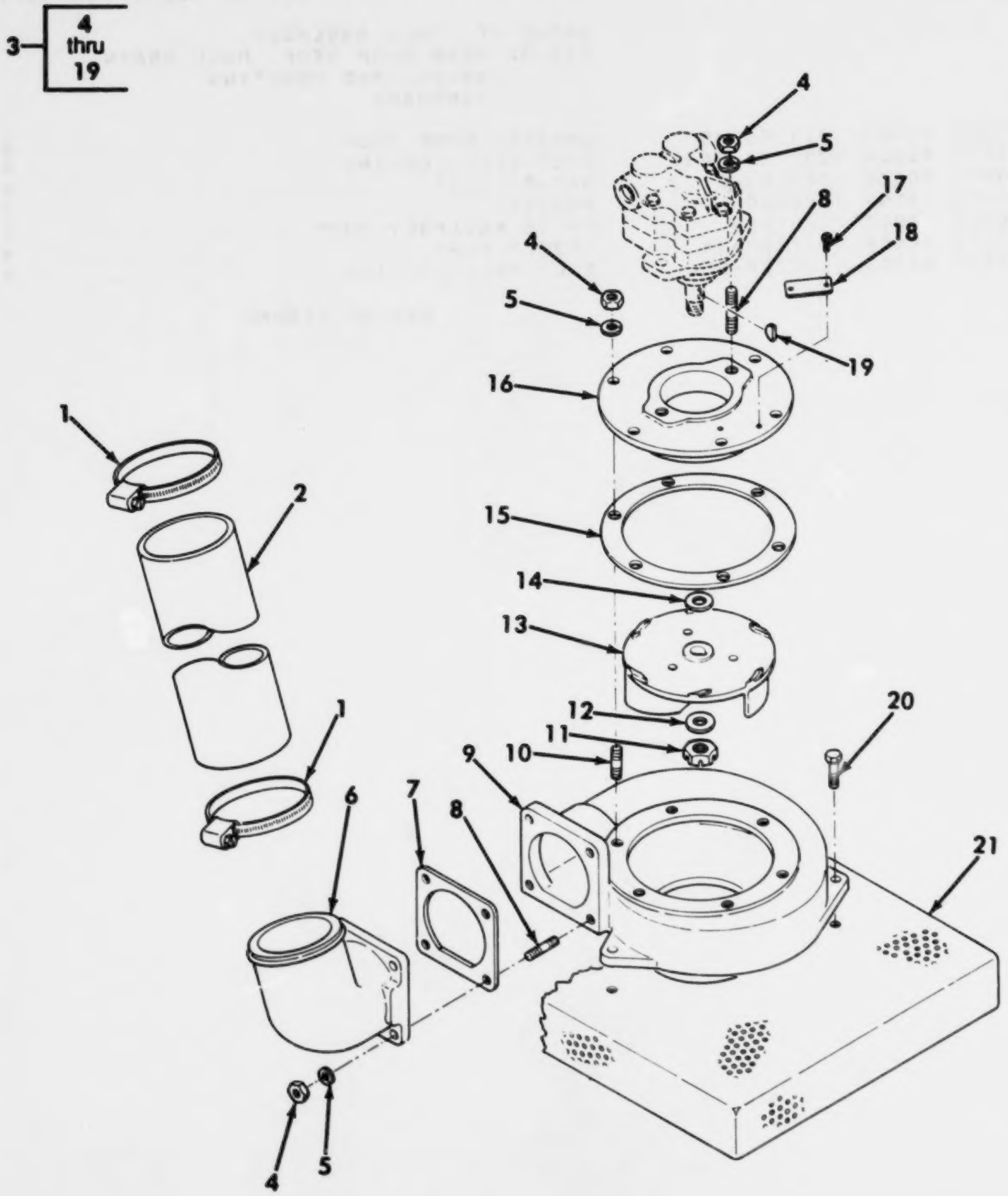

Figure 73. Bilge Pump Assembly and Related Parts.

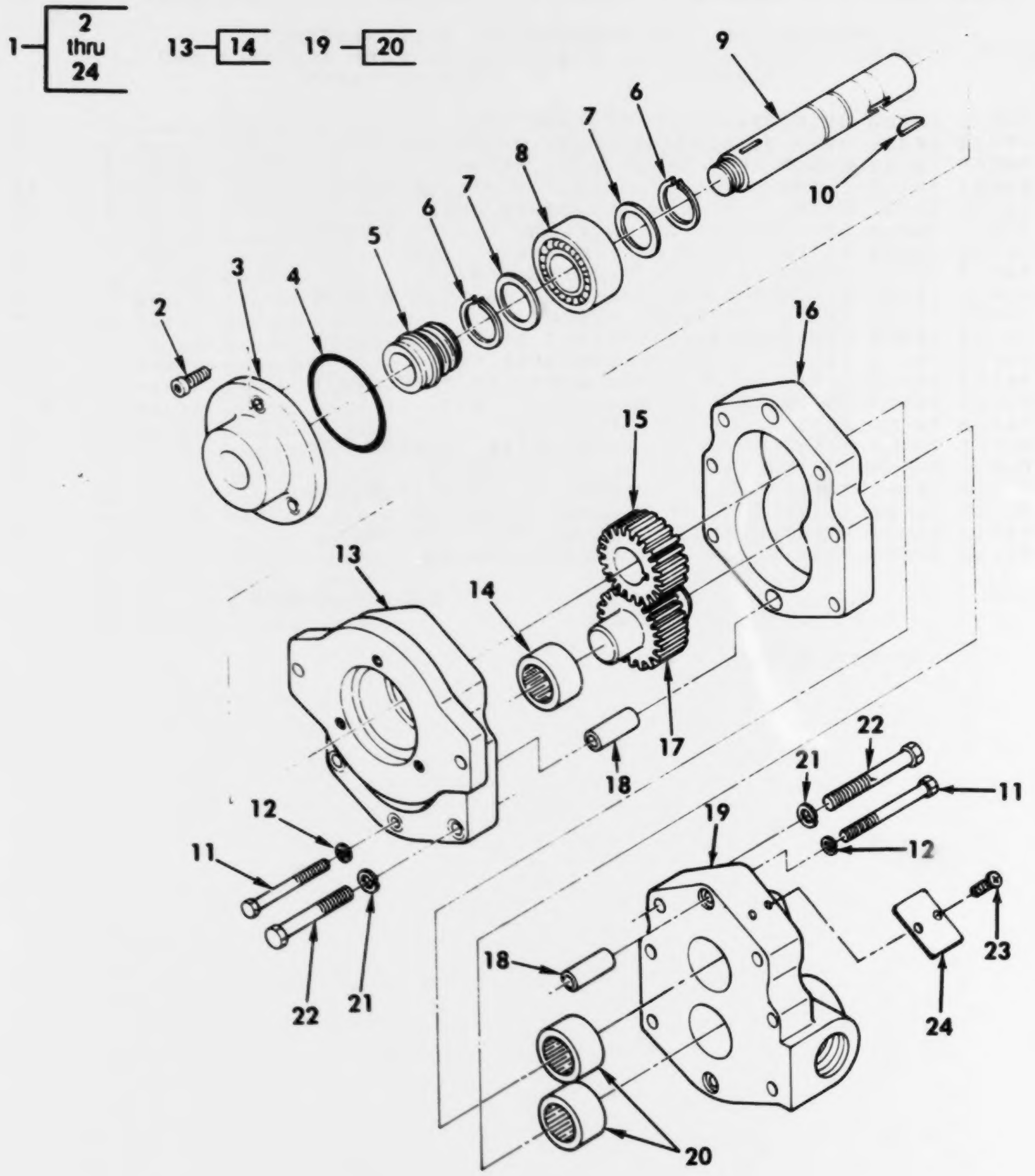

Figure 74. Bilge Pump Hydraulic Motor Assembly.

(1) ITEM NO	(2) SMR CODE	(3) CAGEC	(4) PART NUMBER	(5) DESCRIPTION AND USABLE ON CODES(UOC)	(6) QTY
				GROUP AP: HULL ASSEMBLY FIG.73 BILGE PUMP ASSEMBLY AND RELATED PARTS	
1	PAFZZ	96906	MS35842-16	CLAMP,HOSE	2
2	PFFZZ	96906	MS521301A231240	HOSE,NONMETALLIC	1
3	PAFFF	76122	24057	PUMP,ROTARY	1
4	PAFZZ	76122	21230	.NUT,PLAIN,HEXAGON	12
5	PAFZZ	76122	21266	.WASHER,LOCK	12
6	PAFZZ	76122	22121	.ELBOW,FLANGE TO HOS	1
7	PAFZZ	76122	22122	.GASKET	1
8	PAFZZ	76122	21261	.STUD,PLAIN	6
9	PFFZZ	76122	22111	.HOUSING,LIQUID PUMP	1
10	PAFZZ	76122	21260	.STUD	6
11	PAFZZ	96906	MS21083C10	.NUT,SELF-LOCKING,HE	1
12	PAFZZ	76122	22117	.WASHER,FLAT	1
13	PFFZZ	76122	22113	.IMPELLER,PUMP,CENTR	1
14	PAFZZ	76122	22164	.SHIM .010	V
15	PAFZZ	76122	22115	.GASKET	1
16	PAFZZ	76122	22112	.ADAPTER,HOUSING,PUM	1
17	PAFZZ	96906	MS21318-13	.SCREW,DRIVE	2
18	PFFZZ	76122	22188	.PLATE,IDENTIFICATIO	1
19	PAFZZ	76122	22126	.KEY,WOODRUFF	1
20	PAFZZ	96906	MS90728-113L	BOLT,SELF-LOCKING	3
21	PFFZZ	97403	13211E8699	SCREEN,BILGE	1

END OF FIGURE

(1) ITEM NO	(2) SMR CODE	(3) CAGEC	(4) PART NUMBER	(5) DESCRIPTION AND USABLE ON CODES(UOC)	(6) QTY
				GROUP AP: HULL ASSEMBLY FIG.74 BILGE PUMP HYDRAULIC MOTOR ASSEMBLY	
1	PFFFF	64294	HX365-3	MOTOR,HYDRAULIC....................	1
2	PAFZZ	64294	29531-16	.SCREW........................	3
3	PAFZZ	64294	20198-3	.PLATE,RETAINING,SHA...............	1
4	PAFZZ	64294	29771-138	.PACKING,PREFORMED.................	1
5	PAFZZ	64294	27486A	.SEAL ASSEMBLY,SHAFT...............	1
6	PAFZZ	64294	29650-3	.RING,RETAINING....................	2
7	PAFZZ	64294	29602-132	.SPACER,RING.......................	2
8	PAFZZ	64294	30623	.BEARING,BALL,ANNULA...............	1
9	PAFZZ	64294	SK4376	.SHAFT,SHOULDERED..................	1
10	PAFZZ	64294	29620-3	.KEY,WOODRUFF......................	1
11	PAFZZ	64294	29530-9	.SCREW,CAP,HEXAGON H...............	2
12	PAFZZ	64294	29601-11	.WASHER,LOCK.......................	2
13	PFFFF	64294	16877-1	.HOUSING,MECHANICAL................	1
14	PAFZZ	64294	30621	..BEARING,ROLLER,NEED..............	1
15	XDFZZ	64294	20202-1	.GEAR,HELICAL......................	1
16	PAFZZ	64294	30615-3	.HOUSING,MECHANICAL................	1
17	PAFZZ	64294	20205	.GEAR ASSEMBLY.....................	1
18	PAFZZ	64294	30619	.SPACER,SLEEVE.....................	2
19	PFFFF	64294	16751-14	.COVER,GEAR PLATE..................	1
20	PAFZZ	64294	30621	..BEARING,ROLLER,NEED..............	2
21	PAFZZ	64294	29601-12	.WASHER,LOCK.......................	6
22	PAFZZ	64294	29530-11	.BOLT,MACHINE......................	6
23	PAFZZ	64294	.9549-4	.SCREW,DRIVE.......................	2
24	PFFZZ	64294	41691	.PLATE,IDENTIFICATIO...............	1

END OF FIGURE

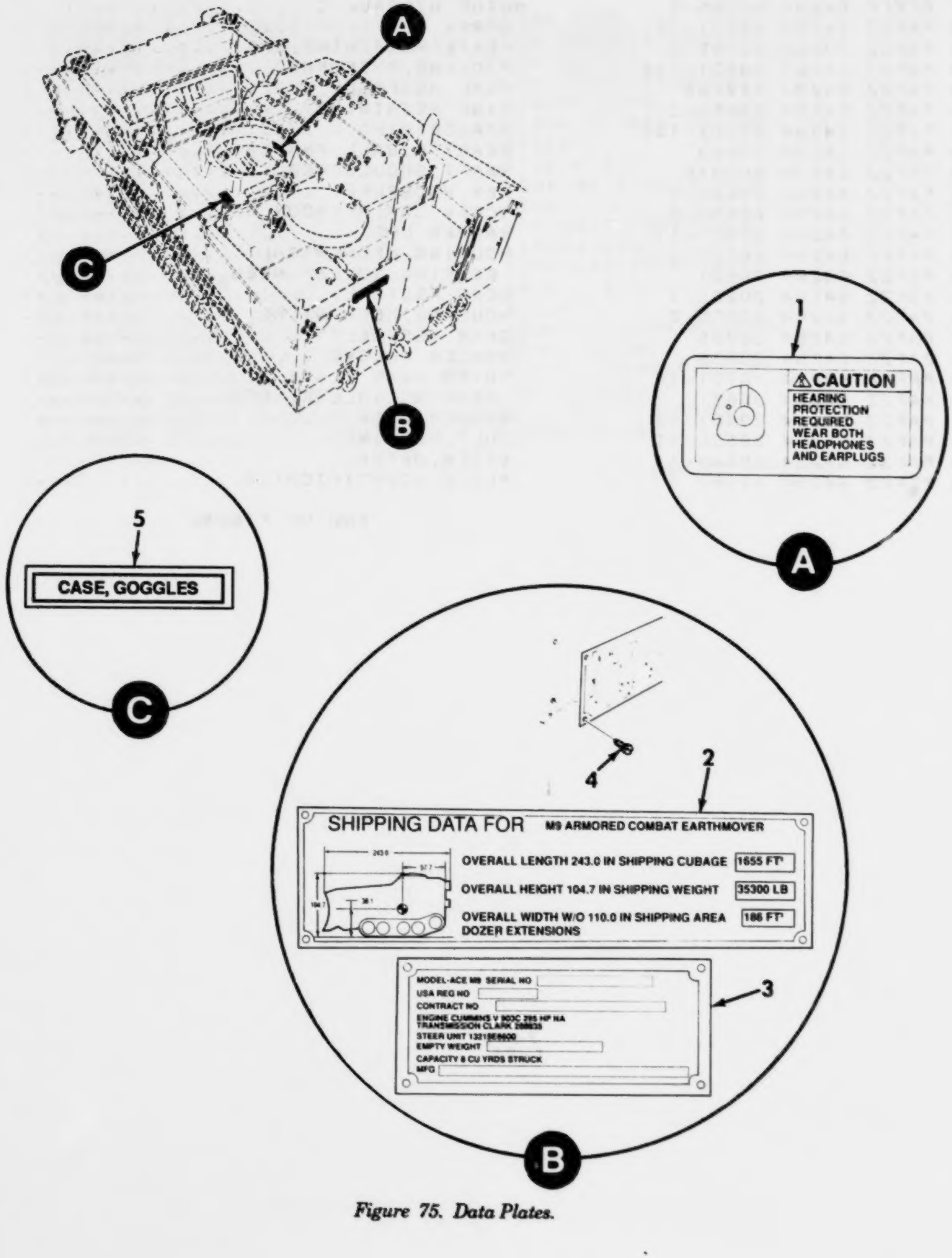

Figure 75. Data Plates.

(1) ITEM NO	(2) SMR CODE	(3) CAGEC	(4) PART NUMBER	(5) DESCRIPTION AND USABLE ON CODES(UOC)	(6) QTY
				GROUP AP: HULL ASSEMBLY FIG.75 DATA PLATES	
1	PAOZZ	19207	12297759	PLATE,INSTRUCTION....................	1
2	PFOZZ	97403	13214E2622	PLATE,IDENTIFICATIO..................	1
3	PFOZZ	97403	13214E2452	PLATE,IDENTIFICATIO..................	1
4	PFOZZ	96906	MS51850-44	SCREW,TAPPING,THREA..................	8
5	XDOZZ	19207	12357374	MARKER,IDENTIFICATI..................	1

END OF FIGURE

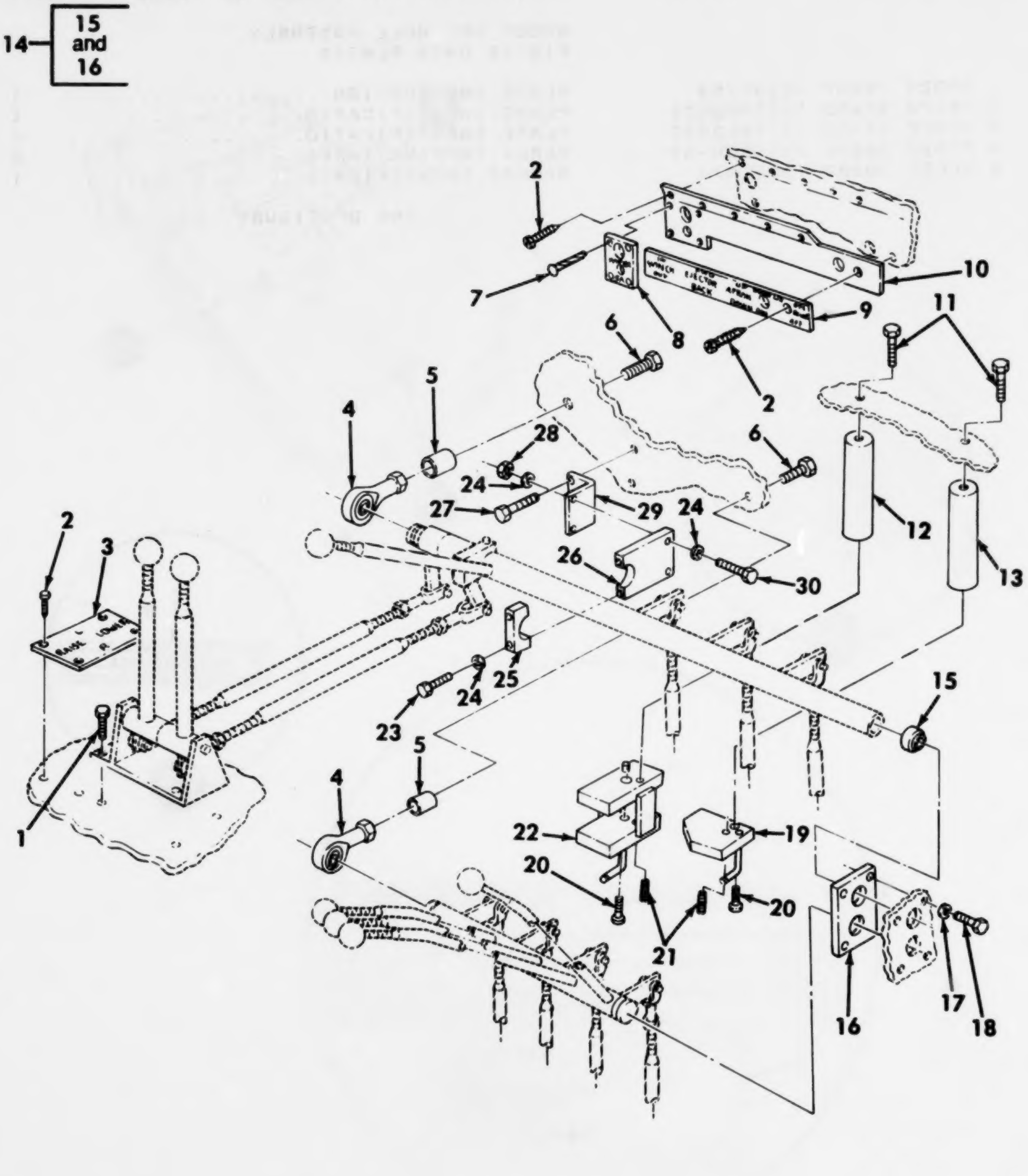

Figure 76. Hydraulic Control Levers and Linkage (Sheet 1 of 3).

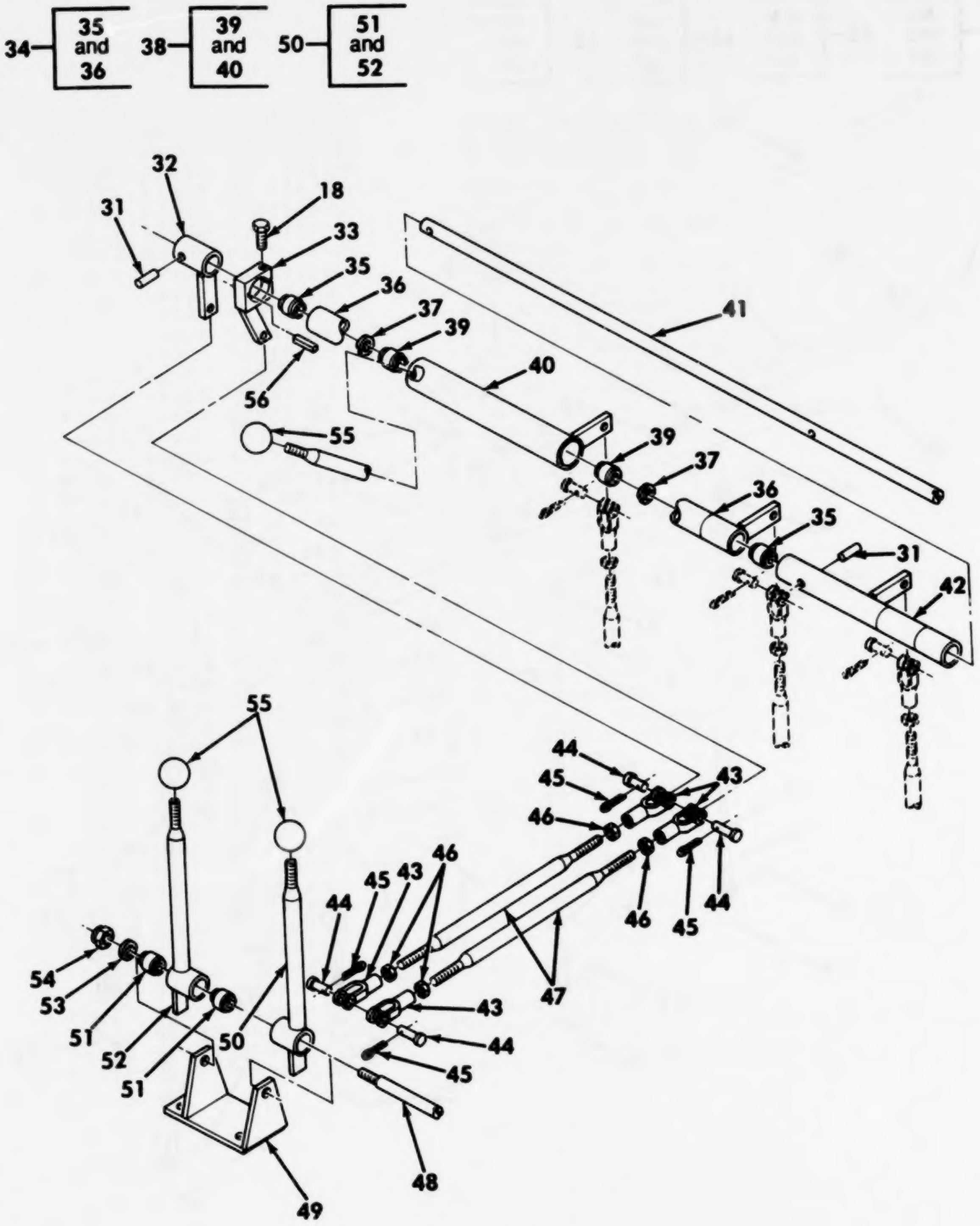

Figure 76. Hydraulic Control Levers and Linkage (Sheet 2 of 3).

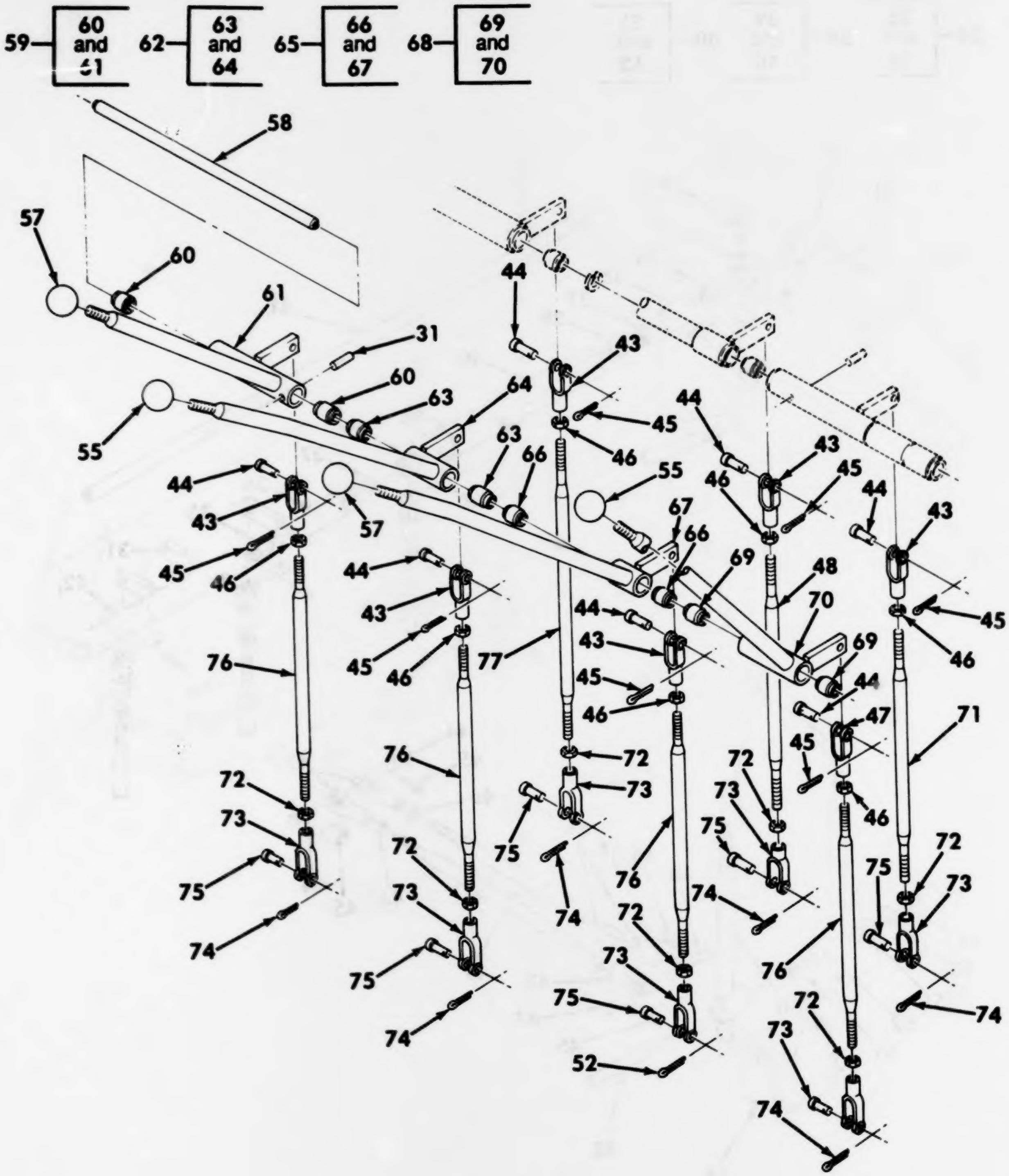

Figure 76. Hydraulic Control Levers and Linkage (Sheet 3 of 3).

(1) ITEM NO	(2) SMR CODE	(3) CAGEC	(4) PART NUMBER	(5) DESCRIPTION AND USABLE ON CODES(UOC)	(6) QTY
				GROUP AQ: HYDRAULIC CONTROL INSTALLATION	
				FIG.76 HYDRAULIC CONTROL LEVERS AND LINKAGE	
1	PAOZZ	96906	MS90728-62	SCREW,CAP,HEXAGON H.................	4
2	PAOZZ	96906	MS51850-64	SCREW,TAPPING,THREA.................	19
3	PFOZZ	97403	13211E8997	PLATE,INSTRUCTION.................	1
4	PFOZZ	81349	M81935/2-12K	BEARING,PLAIN,ROD E.................	2
5	PFOZZ	97403	13211E9401	SPACER,SLEEVE.................	2
6	PAOZZ	96906	MS90727-197	SCREW,CAP,HEXAGON H.................	2
7	PAOZZ	96906	MS21318-20	SCREW,DRIVE.................	4
8	PFOZZ	97403	13214E2208	PLATE,IDENTIFICATIO.................	1
9	PFOZZ	19207	12357186	PLATE,IDENTIFICATIO.................	1
10	PFOZZ	19207	12332238	PLATE,MOUNTING.................	1
11	PAOZZ	96906	MS90728-189L	BOLT,SELF-LOCKING.................	2
12	PFOZZ	19207	12355460	SUPPORT,EJECTOR STO.................	1
13	PFOZZ	19207	12355640	SUPPORT,INTERLOCK.................	1
14	PAOOO	19207	12332553	BRACKET ASSEMBLY,HY.................	1
15	PAOZZ	73134	NRR12	.BEARING,PLAIN,SELF-.................	2
16	XAOZZ	19207	12332554	.PLATE.................	1
17	PAOZZ	96906	MS27183-14	WASHER,FLAT.................	4
18	PAOZZ	96906	MS90728-62L	BOLT,SELF-LOCKING.................	5
19	PFOZZ	97403	13211E9415	STOP,APRON.................	1
20	PAOZZ	96906	MS51975-16	SCREW,SHOULDER.................	2
21	XDOZZ	01226	BH58N	PLUNGER,BALL,HANDGR.................	2
22	PFOZZ	19207	12355576	STOP,EJECTOR.................	1
23	PAOZZ	96906	MS90728-39	SCREW,CAP,HEXAGON H.................	2
24	PAOZZ	96906	MS27183-12	WASHER,FLAT.................	6
25	PAOZZ	97403	13214E2055	CLAMP,LOWER HYDRAUL.................	1
26	PAOZZ	97403	13211E9079	CLAMP,UPPER.................	1
27	PAOZZ	96906	MS90728-60L	BOLT,SELF-LOCKING.................	2
28	PAOZZ	96906	MS17829-5C	NUT,SELF-LOCKING,HE.................	2
29	PFOZZ	97403	13214E2137	BRACKET,ANGLE.................	1
30	PAOZZ	96906	MS90728-38	SCREW,CAP,HEXAGON H.................	2
31	PAOZZ	96906	MS35674-48	PIN,GROOVED,HEADLES.................	3
32	PFOZZ	97403	13204E3691	BELL CRANK.................	1
33	PFOZZ	97403	13204E3688	BELL CRANK.................	1
34	PFOOO	19207	12332331	BELL CRANK.................	1
35	PAOZZ	19207	12331895-1	.BEARING,SLEEVE.................	2
36	XAOZZ	19207	12331886	.BELLCRANK.................	2
37	PAOZZ	96906	MS16626-1106	RING,RETAINING.................	2
38	PFOOO	19207	12332239	BELL CRANK.................	1
39	PAOZZ	19207	12331895-1	.BEARING,SLEEVE.................	2
40	XAOZZ	19207	12332235	.BELLCRANK.................	1
41	PFOZZ	19207	12325793	SHAFT,STRAIGHT.................	1
42	PFOZZ	97403	13211E9411	BELL CRANK.................	1
43	PAOZZ	96906	MS35812-4	CLEVIS,ROD END.................	11
44	PAOZZ	96906	MS35810-4	PIN,STRAIGHT,HEADED.................	11
45	PAOZZ	96906	MS24665-283	PIN,COTTER.................	11
46	PAOZZ	96906	MS35691-21	NUT,PLAIN,HEXAGON.................	11
47	PFOZZ	19207	12335110	ROD,THREADED END.................	2

(1) ITEM NO	(2) SMR CODE	(3) CAGEC	(4) PART NUMBER	(5) DESCRIPTION AND USABLE ON CODES(UOC)	(6) QTY
48	PFOZZ	19207	12325791	SHAFT,SHOULDERED	1
49	PFOZZ	97403	13204E3698	BRACKET,OIL	1
50	PFOOO	19207	12332233	BELL CRANK	2
51	PAOZZ	19207	12331895-1	.BEARING,SLEEVE	2
52	XAOZZ	19207	12331884	.BELLCRANK	1
53	PAOZZ	96906	MS27183-21	WASHER,FLAT	1
54	PAOZZ	96906	MS21083N10	NUT,SELF-LOCKING,HE	1
55	PAOZZ	72512	55M	KNOB	5
56	PAOZZ	96906	MS20066-100	KEY,MACHINE	1
57	PAOZZ	72512	55M RED95	KNOB	2
58	PFOZZ	19207	12325792	SHAFT,STRAIGHT	1
59	PFOOO	19207	12332232	BELL CRANK	1
60	PAOZZ	19207	12331895-1	.BEARING,SLEEVE	2
61	XAOZZ	19207	12331885	.BELLCRANK	1
62	PFOOO	19207	12332097-3	BELL CRANK	1
63	PAOZZ	19207	12331895-1	.BEARING,SLEEVE	2
64	XAOZZ	19207	12325799-3	.BELLCRANK	1
65	PFOOO	19207	12332097-2	BELL CRANK	1
66	PAOZZ	19207	12331895-1	.BEARING,SLEEVE	2
67	XAOZZ	19207	12325799-2	.BELLCRANK	1
68	PFOOO	19207	12332097-1	BELL CRANK	1
69	PAOZZ	19207	12331895-1	.BEARING,SLEEVE	2
70	XAOZZ	19207	12325799-1	.BELLCRANK	1
71	PFOZZ	19207	12335109-2	ROD,THREADED END	2
72	PAOZZ	96906	MS35691-13	NUT,PLAIN,HEXAGON	7
73	PAOZZ	97403	13214E2272	CLEVIS,ROD END	7
74	PAOZZ	96906	MS24665-132	PIN,COTTER	7
75	PAOZZ	96906	MS20392-3C25	PIN,STRAIGHT,HEADED	7
76	PFOZZ	19207	12335109-1	ROD,THREADED END	4
77	PFOZZ	19207	12335109-3	ROD,THREADED END	1

END OF FIGURE

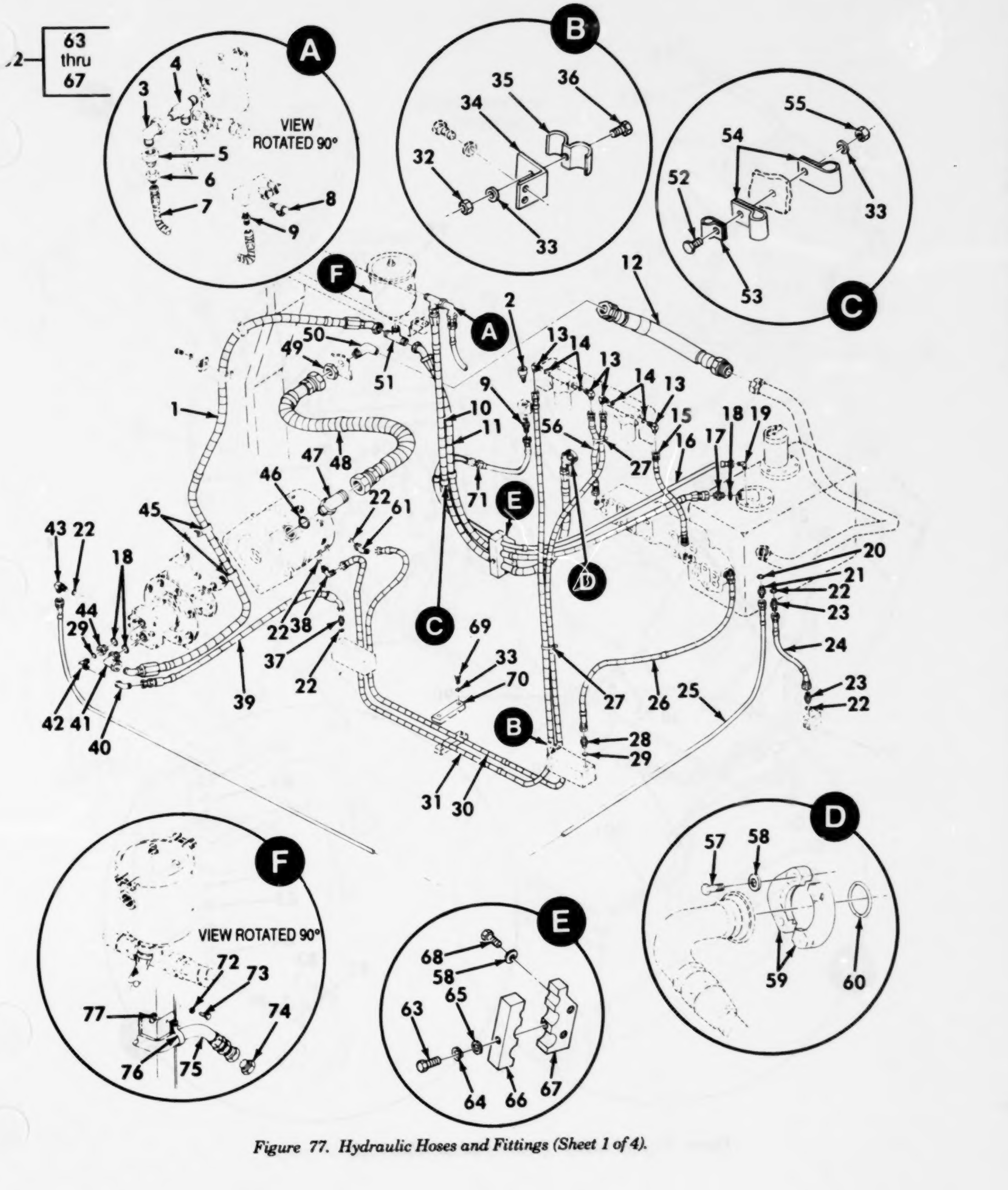

Figure 77. Hydraulic Hoses and Fittings (Sheet 1 of 4).

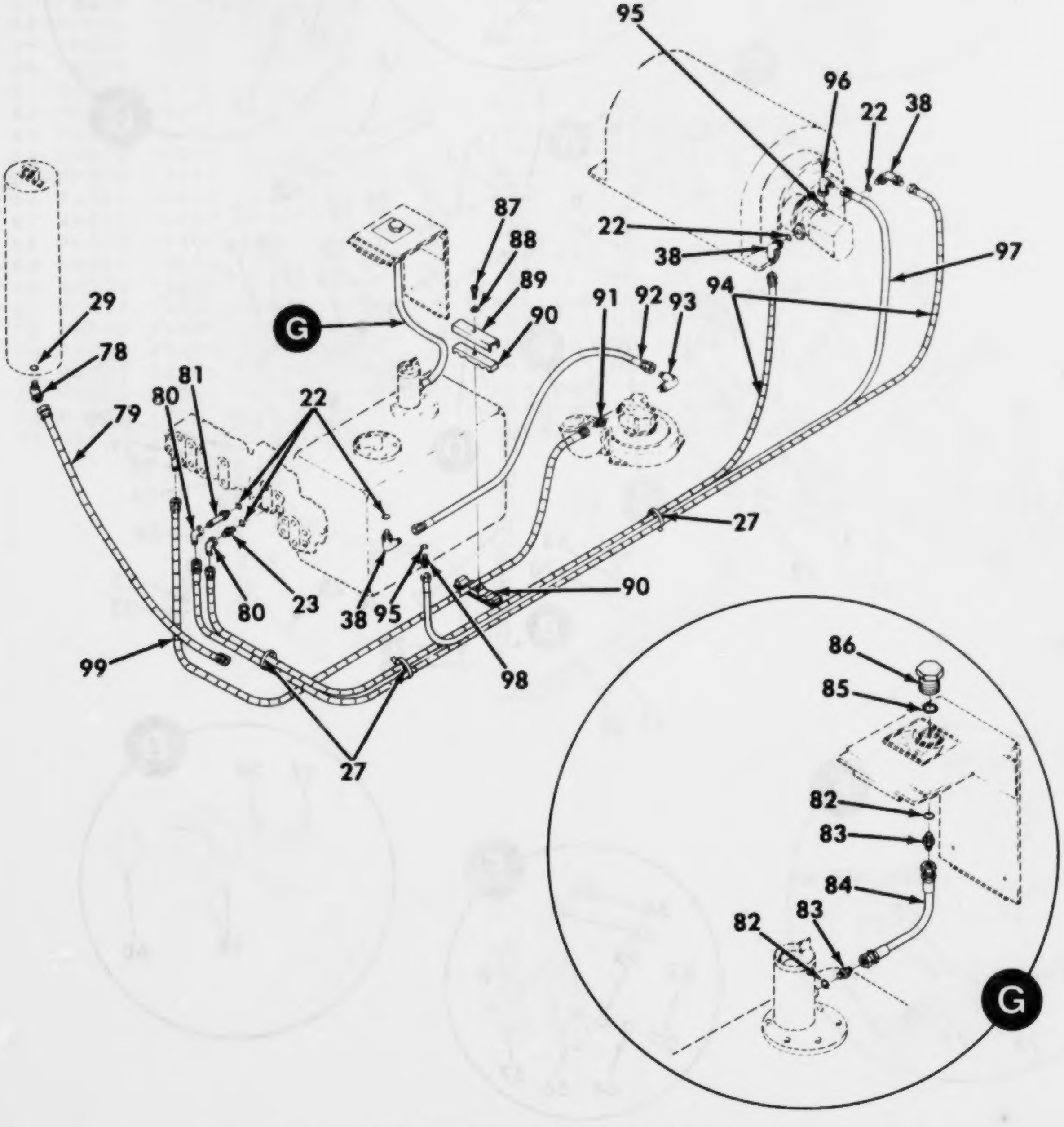

Figure 77. Hydraulic Hoses and Fittings (Sheet 2 of 4).

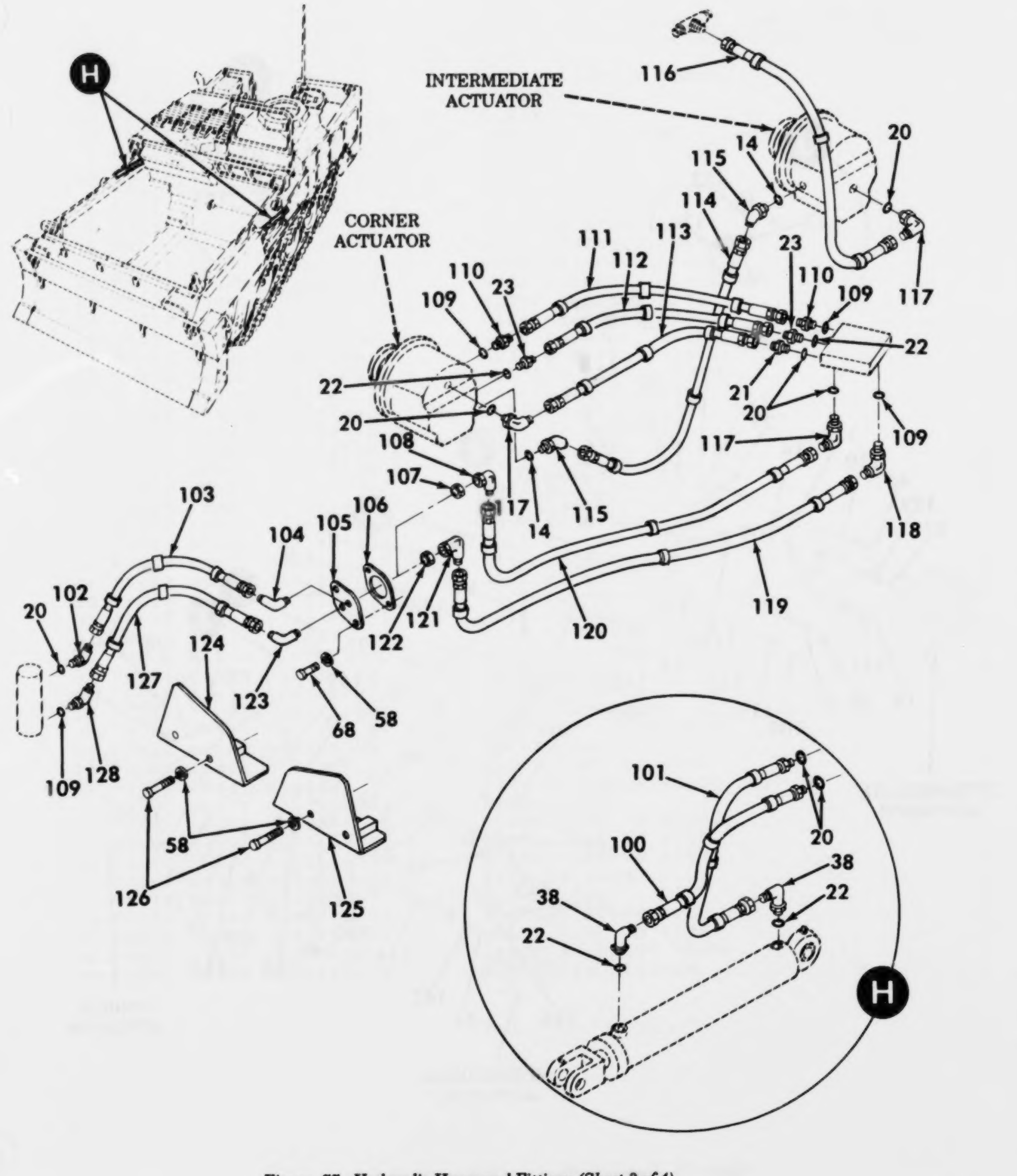

Figure 77. Hydraulic Hoses and Fittings (Sheet 3 of 4).

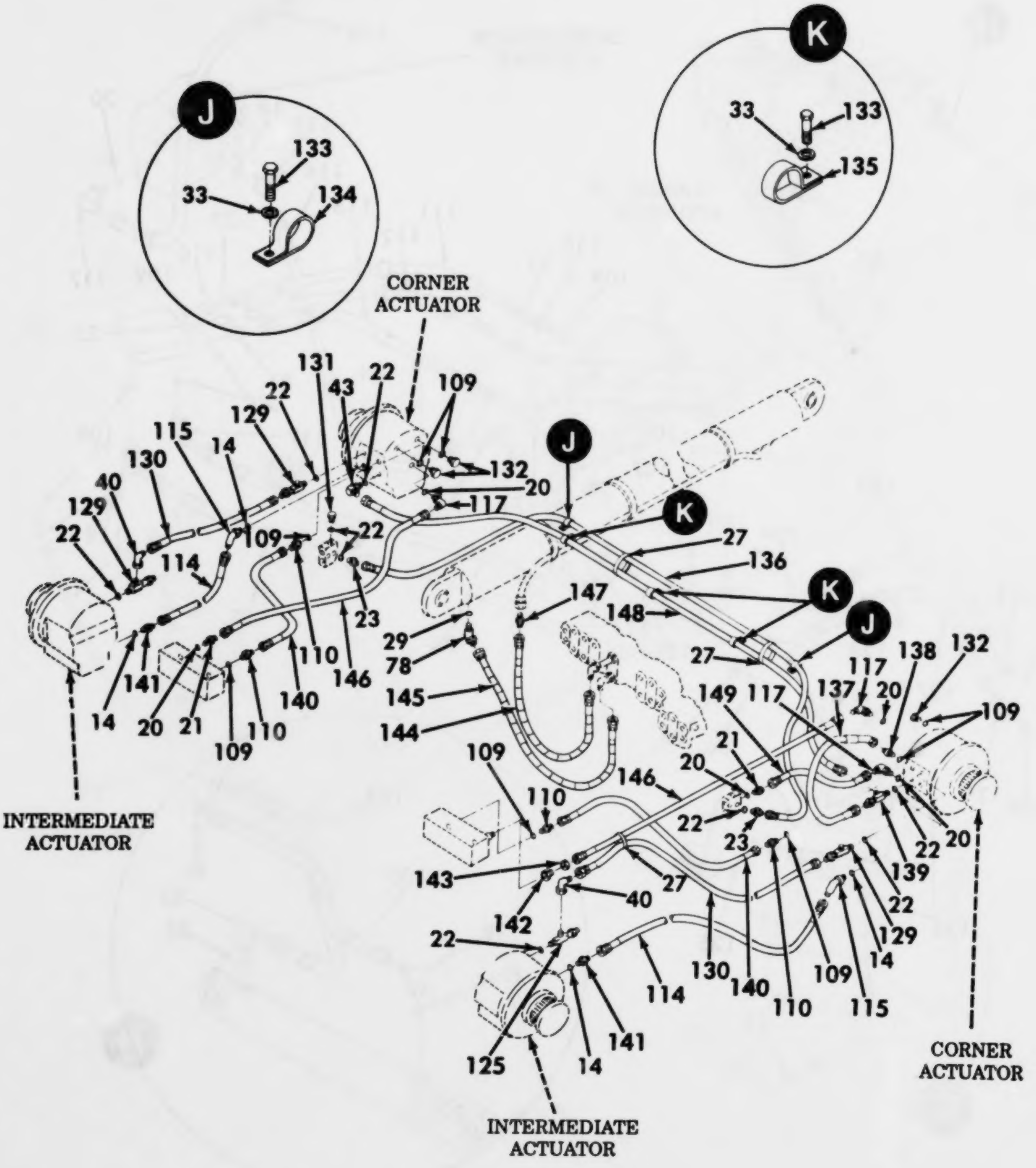

Figure 77. Hydraulic Hoses and Fittings (Sheet 4 of 4).

(1) ITEM NO	(2) SMR CODE	(3) CAGEC	(4) PART NUMBER	(5) DESCRIPTION AND USABLE ON CODES(UOC)	(6) QTY
				GROUP AR: HYDRAULIC INSTALLATION FIG.77 HYDRAULIC HOSES AND FITTINGS	
1	PAOZZ	19207	12352614	HOSE ASSEMBLY,NONME..................	1
2	PAOZZ	90005	569020-18	BREATHER..............................	1
3	PAOZZ	96906	MS51521A20	ELBOW,TUBE............................	1
4	PAOZZ	96906	MS51511A20	TEE,PIPE TO TUBE......................	1
5	PAOZZ	19207	12355293-1	REDUCER,TUBE..........................	1
6	PAOZZ	19207	12355293-2	REDUCER,TUBE..........................	1
7	PAOZZ	19207	12355287-3	HOSE ASSEMBLY,NONME..................	1
8	PAOZZ	91816	P59-500	VALVE,BLEEDER,HYDRA..................	1
9	PAOZZ	96906	MS51500B6	ADAPTER,STRAIGHT,PI..................	2
10	PAOZZ	97403	13214E2797	HOSE ASSEMBLY,NONME..................	1
11	PAOZZ	19207	12357414	HOSE ASSEMBLY,NONME..................	1
12	PAOZZ	97403	13214E2551	HOSE ASSEMBLY,NONME..................	1
13	PAOZZ	97403	13211E9018-5	ELBOW,TUBE TO BOSS...................	4
14	PAOZZ	96906	MS28778-12	PACKING,PREFORMED....................	8
15	PAOZZ	97403	13214E2457-2	HOSE ASSEMBLY,NONME..................	1
16	PFOZZ	19207	12357135	HOSE ASSEMBLY,NONME..................	1
17	PAOZZ	96906	MS51525A20	ADAPTER,STRAIGHT.....................	1
18	PAOZZ	96906	MS28778-20	PACKING,PREFORMED....................	3
19	PAOZZ	96906	MS51504A6	ELBOW,PIPE TO TUBE...................	1
20	PAOZZ	96906	MS28778-6	PACKING,PREFORMED....................	20
21	PAOZZ	96906	MS51525A6	ADAPTER,STRAIGHT,TU..................	5
22	PAOZZ	96906	MS28778-8	PACKING,PREFORMED....................	28
23	PAOZZ	46717	AC-1-310	ADAPTER,STRAIGHT,TU..................	9
24	PAOZZ	19207	12357145	HOSE ASSEMBLY,NONME..................	1
25	PAOZZ	19207	12357141	HOSE ASSEMBLY,NONME..................	1
26	PAOZZ	97403	13214E2473-1	HOSE ASSEMBLY,NONME..................	1
27	PAOZZ	96906	MS3367-3-9	STRAP,TIEDOWN,ELECT..................	9
28	PAOZZ	96906	MS51525A10	ADAPTER,STRAIGHT,TU..................	1
29	PAOZZ	96906	MS28778-10	PACKING,PREFORMED....................	4
30	PAOZZ	97403	13214E2457-5	HOSE ASSEMBLY,NONME..................	1
31	PAOZZ	98441	A1269-1	HOSE ASSEMBLY,NONME..................	1
32	PAOZZ	96906	MS17829-6C	NUT,SELF-LOCKING,HE..................	1
33	PAOZZ	96906	MS9320-12	WASHER,FLAT..........................	9
34	PFOZZ	97403	13214E2832	BRACKET,ANGLE........................	1
35	PFOZZ	97403	13214E2833	STRAP,RETAINING......................	1
36	PAOZZ	96906	MS90728-66	SCREW,CAP,HEXAGON H..................	1
37	PAOZZ	96906	MS24593-8	VALVE,CHECK..........................	1
38	PAOZZ	96906	MS51527A8	ELBOW,TUBE TO BOSS...................	8
39	PAOZZ	98441	A1268-1	HOSE ASSEMBLY,NONME..................	1
40	PAOZZ	96906	MS51522A8S	ELBOW,TUBE...........................	3
41	PAOZZ	96906	MS51527A20	ELBOW,TUBE TO BOSS...................	1
42	PAOZZ	97403	13211E9018-8	ELBOW,TUBE TO BOSS...................	1
43	PAOZZ	97403	13211E9018-12	ELBOW,TUBE TO BOSS...................	2
44	PAOZZ	96906	MS24397-21	REDUCER,BOSS.........................	1
45	PAOZZ	19207	7529133-7	CLAMP,LOOP...........................	2
46	PAOZZ	96906	MS28778-24	PACKING,PREFORMED....................	1
47	PAOZZ	96906	MS51527A24	ELBOW,TUBE TO BOSS...................	1
48	PAOZZ	19207	12352622	.HOSE ASSEMBLY,NONME.................	1
49	PAOZZ	96906	MS51860-12	NUT,PLAIN,HEXAGON....................	1

(1) ITEM NO	(2) SMR CODE	(3) CAGEC	(4) PART NUMBER	(5) DESCRIPTION AND USABLE ON CODES(UOC)	(6) QTY
50	PAOZZ	96906	MS51509A24	ELBOW,TUBE	1
51	PAOZZ	96906	MS51512A20	TEE,PIPE TO TUBE	1
52	PAOZZ	96906	MS90728-61L	BOLT,SELF-LOCKING	1
53	PAOZZ	96906	7397787	CLAMP,LOOP	1
54	PAOZZ	19207	7529133-7	CLAMP,LOOP	2
55	PAOZZ	96906	MS51967-8	NUT,PLAIN,HEXAGON	1
56	PAOZZ	97403	13214E2457-3	HOSE ASSEMBLY,NONME	1
57	PAOZZ	96906	MS90728-62L	BOLT,SELF-LOCKING	4
58	PAOZZ	96906	MS27183-14	WASHER,FLAT	14
59	PAOZZ	81349	M52525/16-16	FLANGE,PIPE	2
60	PAOZZ	96906	MS28775-219	PACKING,PREFORMED	1
61	PAOZZ	96906	MS51528A8S	ELBOW,TUBE TO BOSS	1
62	PFOOO	97403	13204E2549	CLAMP ASSEMBLY	1
63	PAOZZ	96906	MS90728-66	.SCREW,CAP,HEXAGON H	1
64	PAOZZ	96906	MS35338-46	.WASHER,LOCK	1
65	PAOZZ	96906	MS27183-14	.WASHER,FLAT	1
66	XAOZZ	19207	12335002	.CLAMP TOP	1
67	XAOZZ	19207	12335004	.CLAMP BASE	1
68	PAOZZ	96906	MS90728-60L	BOLT,SELF-LOCKING	6
69	PAOZZ	96906	MS90728-64L	BOLT,SELF-LOCKING	2
70	PFOZZ	97403	13214E1987	STRAP,RETAINING	1
71	PAOZZ	96906	MS52103A060380R	HOSE ASSEMBLY,NONME	1
72	PAOZZ	96906	MS27183-10	WASHER,FLAT	1
73	PAOZZ	96906	MS90728-8	SCREW,CAP,HEXAGON H	1
74	PAOZZ	98441	MS51532B8	CAP,TUBE	1
75	PFOZZ	19207	12357421	HOSE ASSEMBLY,NONME	1
76	PAOZZ	96906	MS21333-105	CLAMP,LOOP	1
77	PAOZZ	96906	MS17829-4C	NUT,SELF-LOCKING,HE	1
78	PAOZZ	97403	13211E8916-7	ELBOW,TUBE TO BOSS	2
79	PAOZZ	97403	13214E2457-4	HOSE ASSEMBLY,NONME	1
80	PAOZZ	96906	MS51521A8	ELBOW,TUBE	2
81	PAOZZ	97403	13211E9563	ADAPTER,STRAIGHT,TU	1
82	PAOZZ	96906	MS28778-16	PACKING,PREFORMED	2
83	PAOZZ	96906	MS51525A16	ADAPTER,STRAIGHT,TU	2
84	PAOZZ	19207	12357137	HOSE ASSEMBLY,NONME	1
85	PAOZZ	96906	MS28778-32	PACKING,PREFORMED	1
86	PAOZZ	96906	MS51840-33	PLUG,MACHINE THREAD	1
87	PAOZZ	96906	MS90728-41L	BOLT,SELF-LOCKING	1
88	PAOZZ	96906	MS27183-12	WASHER,FLAT	1
89	PFOZZ	97403	13214E2411	STRAP,RETAINING	1
90	PAOZZ	97403	13214E2400	BRACKET,HOSE	2
91	PAOZZ	96906	MS51500A8-12	ADAPTER,STRAIGHT,PI	1
92	PAOZZ	19207	12355583	HOSE ASSEMBLY,NONME	1
93	PAOZZ	96906	MS51504A8-12	ELBOW,PIPE TO TUBE	1
94	PAOZZ	97403	13214E2478-1	HOSE ASSEMBLY,NONME	1
95	PAOZZ	96906	MS28778-5	PACKING,PREFORMED	2
96	PAOZZ	96906	MS51527A5	ELBOW,TUBE TO BOSS	1
97	PAOZZ	19207	12357139	HOSE ASSEMBLY,NONME	1
98	PAOZZ	96906	MS51525A5	ADAPTER,STRAIGHT,TU	1
99	PAOZZ	97403	13214E2472	HOSE ASSEMBLY,NONME	1
100	PAOZZ	01276	FB9986-01	HOSE ASSEMBLY,NONME	2
101	PAOZZ	01276	FB9986-02	HOSE ASSEMBLY,NONME	2

(1) ITEM NO	(2) SMR CODE	(3) CAGEC	(4) PART NUMBER	(5) DESCRIPTION AND USABLE ON CODES(UOC)	(6) QTY
102	PAOZZ	96906	MS51528A6	ELBOW,TUBE TO BOSS.................	2
103	PAOZZ	97403	13214E2501-3	HOSE ASSEMBLY,NONME................	2
104	PAOZZ	96906	MS51507A6	ELBOW,TUBE.........................	2
105	PFOZZ	97403	13214E2715	PLATE,BULKHEAD.....................	2
106	PAOZZ	97403	13214E2716	GASKET.............................	2
107	PAOZZ	96906	MS51860-55	LOCKNUT,TUBE FITTIN................	2
108	PAOZZ	96906	MS51521A6	ELBOW,TUBE.........................	2
109	PAOZZ	96906	MS28778-4	PACKING,PREFORMED..................	16
110	PAOZZ	96906	MS51525A4	ADAPTER,STRAIGHT,TU................	8
111	PAOZZ	97403	13214E2495-2	HOSE ASSEMBLY,NONME................	2
112	PAOZZ	98441	A1270-1	HOSE ASSEMBLY,NONME................	2
113	PAOZZ	97403	13214E2501-1	HOSE ASSEMBLY,NONME................	2
114	PAOZZ	97403	13214E2486	HOSE ASSEMBLY,NONME................	4
115	PAOZZ	96906	MS51528A12	ELBOW,TUBE TO BOSS.................	6
116	PAOZZ	19207	12357134	HOSE ASSEMBLY,NONME................	2
117	PAOZZ	96906	MS51527A6	ELBOW,TUBE TO BOSS.................	9
118	PAOZZ	96906	MS51527A4	ELBOW,TUBE TO BOSS.................	2
119	PAOZZ	97403	13214E2495-5	HOSE ASSEMBLY,NONME................	2
120	PAOZZ	97403	13214E2501-5	HOSE ASSEMBLY,NONME................	2
121	PAOZZ	96906	MS51521A4	ELBOW,TUBE.........................	2
122	PAOZZ	96906	MS51860-53	LOCKNUT,TUBE FITTIN................	2
123	PAOZZ	96906	MS51507A4	ELBOW,TUBE.........................	2
124	PFOZZ	97403	13214E2714-2	COVER,ACCESS.......................	1
125	PFOZZ	97403	13214E2714-1	COVER,ACCESS.......................	1
126	PAOZZ	96906	MS90728-75L	BOLT,SELF-LOCKING..................	4
127	PAOZZ	97403	13214E2495-4	HOSE ASSEMBLY,NONME................	2
128	PAOZZ	96906	MS51528A4	ELBOW,TUBE TO BOSS.................	2
129	PAOZZ	97403	13214E2497-1	TEE,TUBE TO BOSS...................	4
130	PAOZZ	97403	13214E2500-2	HOSE ASSEMBLY,NONME................	2
131	PAOZZ	96906	MS51840-26	PLUG,MACHINE THREAD................	1
132	PAOZZ	96906	MS51840-23	PLUG,MACHINE THREAD................	3
133	PAOZZ	96906	MS90728-55L	BOLT,SELF-LOCKING..................	5
134	PAOZZ	96906	MS21333-126	CLAMP,LOOP.........................	2
135	PAOZZ	96906	MS21333-127	CLAMP,LOOP.........................	3
136	PAOZZ	19207	12355579	HOSE ASSEMBLY,NONME................	1
137	PAOZZ	97403	13214E1983	HOSE ASSEMBLY,NONME................	1
138	PAOZZ	96906	MS24593-4	VALVE,CHECK........................	1
139	PAOZZ	97403	13214E2497-2	TEE,TUBE TO BOSS...................	1
140	PAOZZ	97403	13214E2495-1	HOSE ASSEMBLY,NONME................	2
141	PAOZZ	96906	MS51525A12	ADAPTER,STRAIGHT,TU................	2
142	PAOZZ	96906	MS51534A8-6	REDUCER BODY,TUBE..................	1
143	PAOZZ	96906	MS51531B8	NUT,TUBE COUPLING..................	1
144	PAOZZ	98441	A1271-2	HOSE ASSEMBLY,NONME................	1
145	PAOZZ	97403	13214E2457-9	HOSE ASSEMBLY,NONME................	1
146	PAOZZ	97403	13214E2501-2	HOSE ASSEMBLY,NONME................	2
147	PAOZZ	96906	MS51519B10S	NIPPLE,TUBE........................	1
148	PAOZZ	97403	13214E2501-4	HOSE ASSEMBLY,NONME................	1
149	PAOZZ	19207	12355580	HOSE ASSEMBLY,NONME................	1

END OF FIGURE

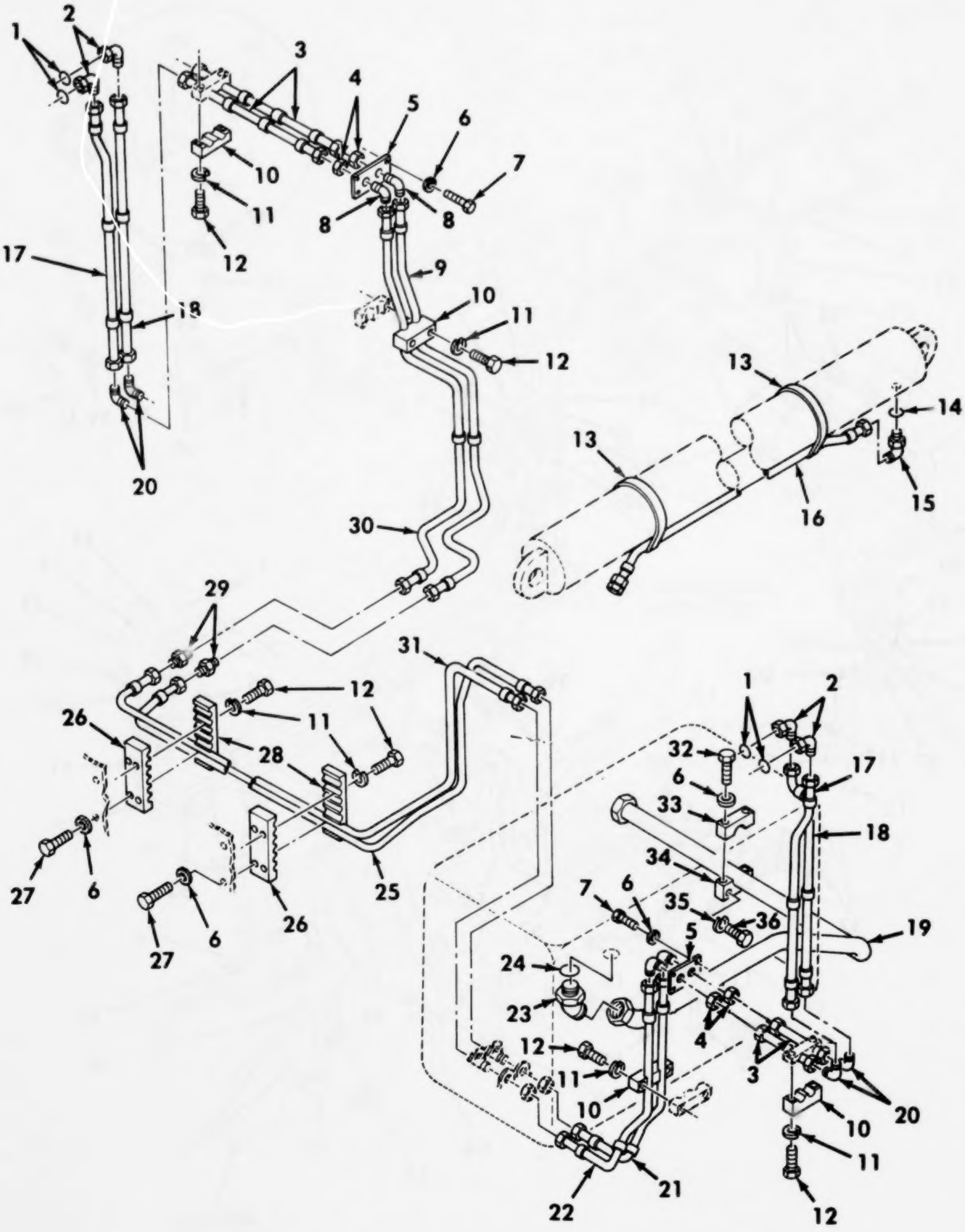

Figure 78. Hydraulic Tubes and Fittings (Sheet 1 of 4).

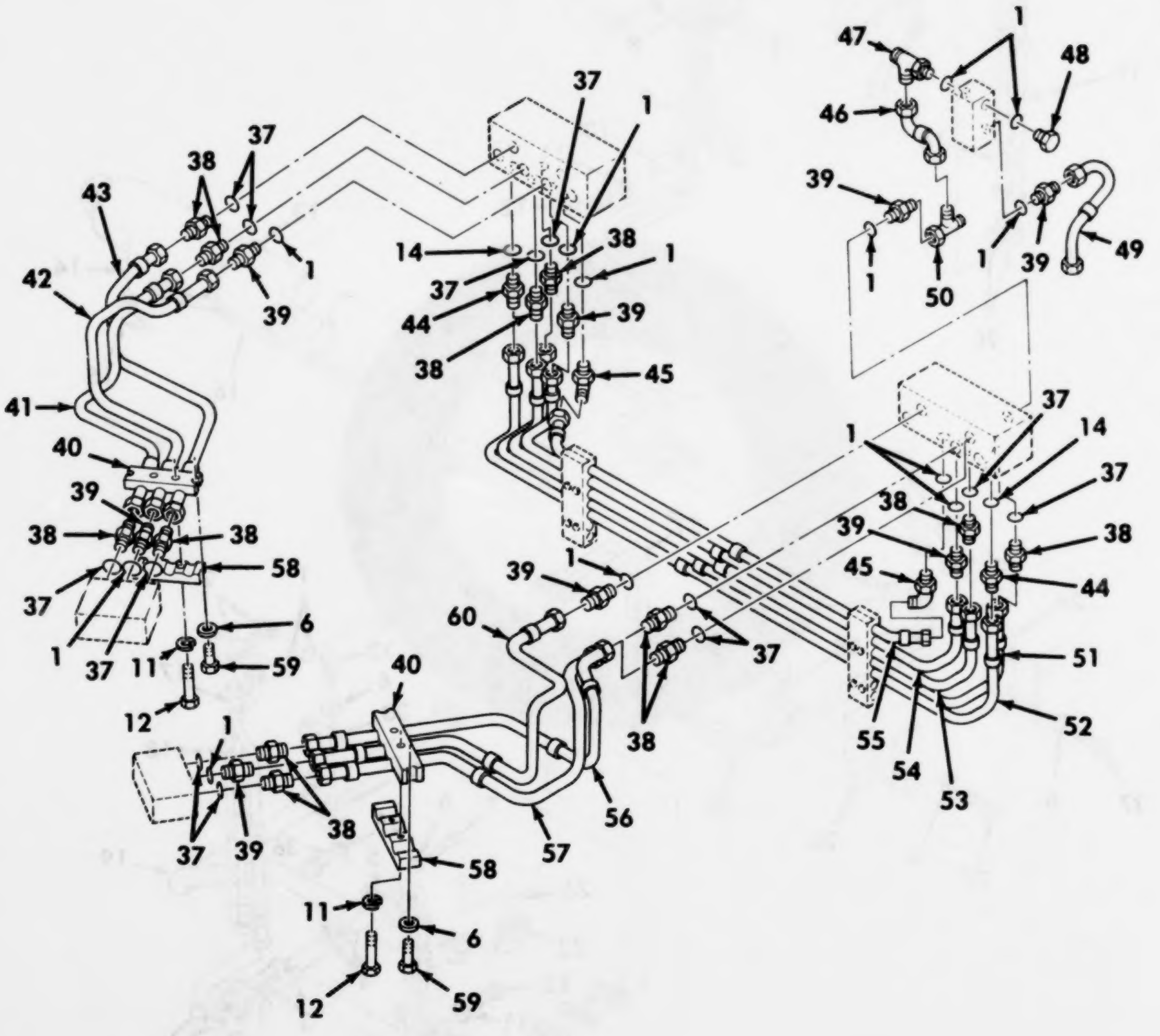

Figure 78. Hydraulic Tubes and Fittings (Sheet 2 of 4).

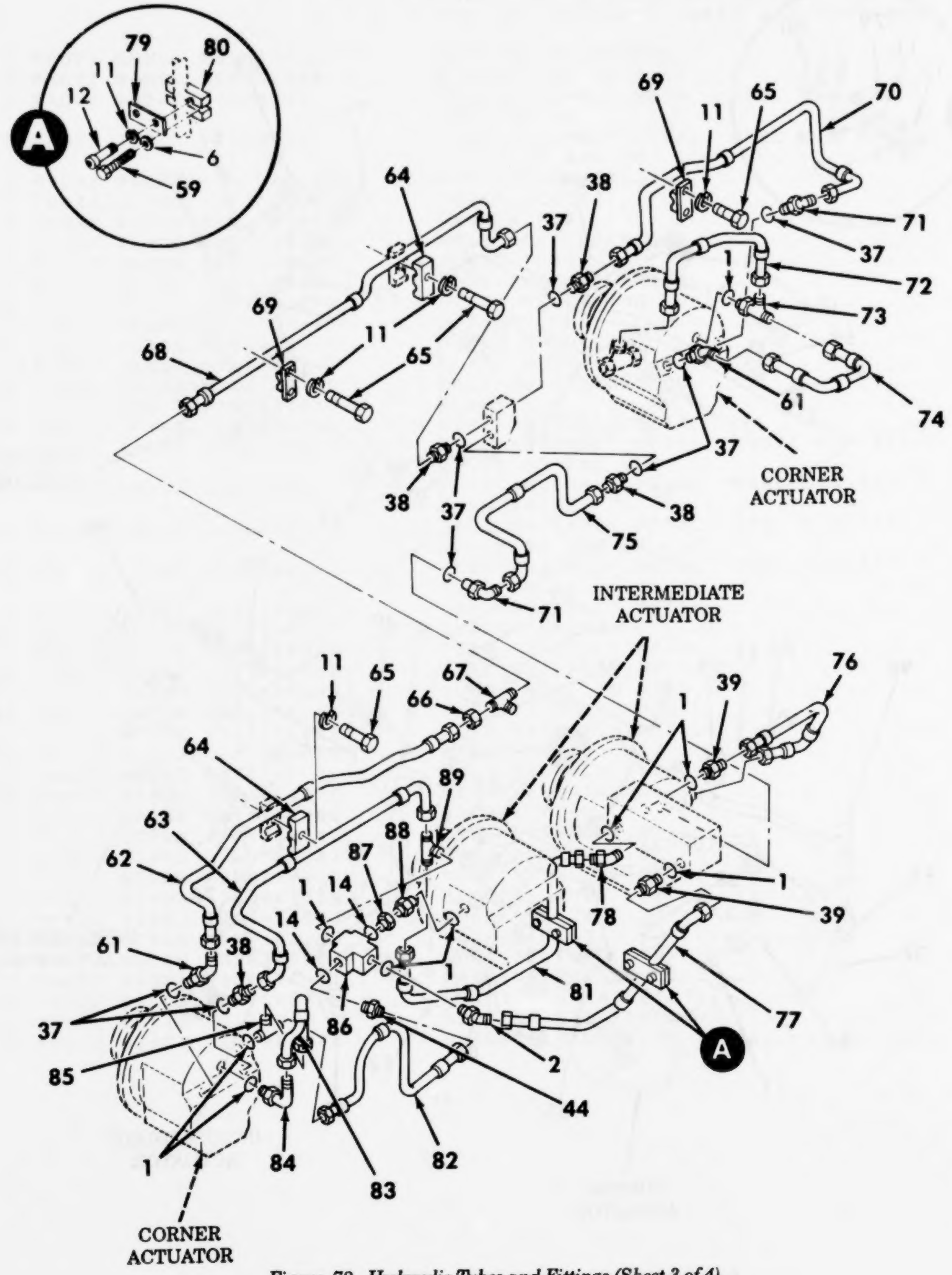

Figure 78. Hydraulic Tubes and Fittings (Sheet 3 of 4).

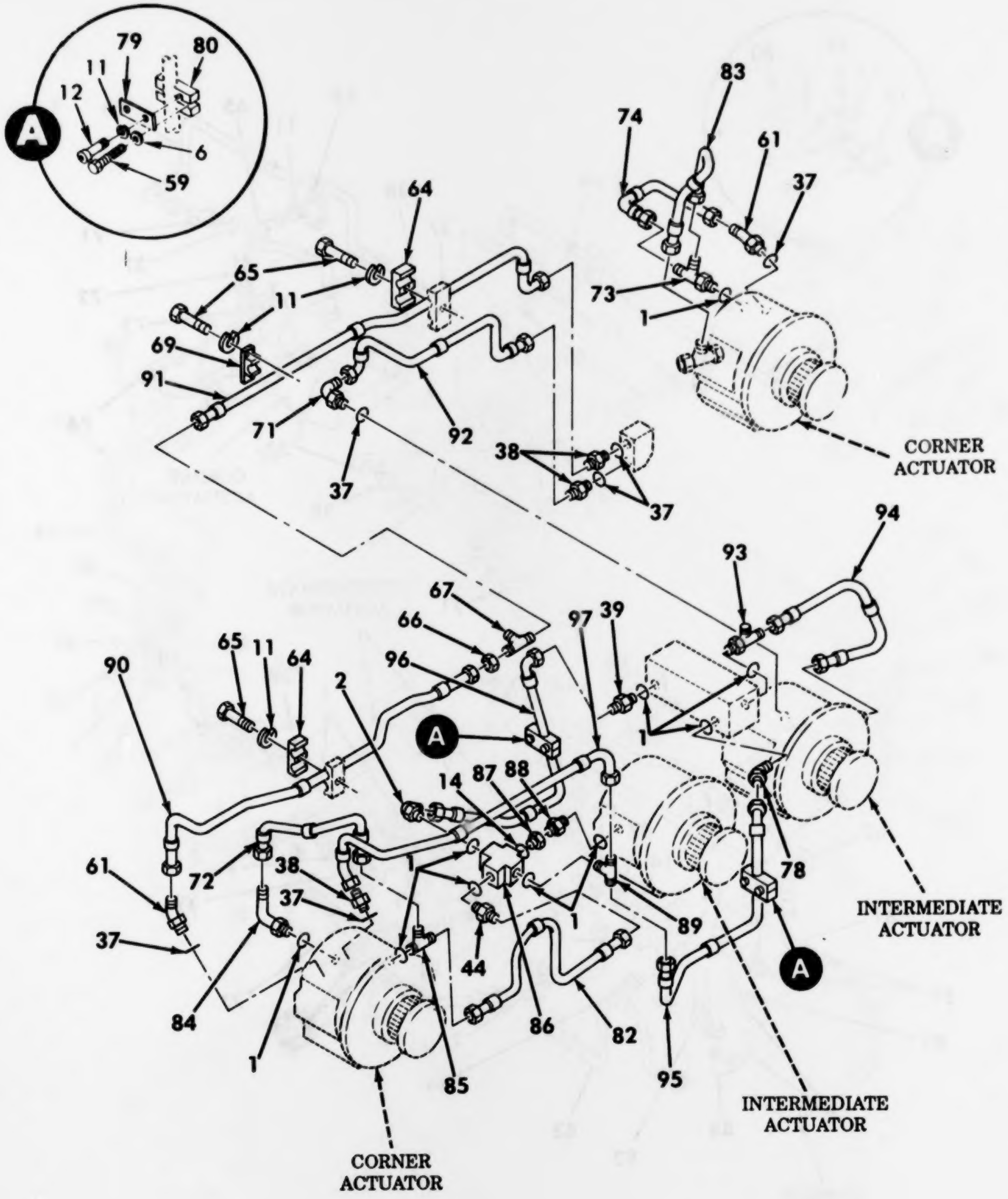

Figure 78. Hydraulic Tubes and Fittings (Sheet 4 of 4).

(1) ITEM NO	(2) SMR CODE	(3) CAGEC	(4) PART NUMBER	(5) DESCRIPTION AND USABLE ON CODES(UOC)	(6) QTY
				GROUP AR: HYDRAULIC INSTALLATION FIG.78 HYDRAULIC TUBES AND FITTINGS	
1	PAOZZ	96906	MS28778-8	PACKING,PREFORMED	34
2	PAOZZ	96906	MS51527A8	ELBOW,TUBE TO BOSS	6
3	PAOZZ	19207	12334705	TUBE ASSEMBLY,METAL USBL S/N EFF,1 THRU 26,29	4
3	PAOZZ	19207	12369156	TUBE ASSEMBLY,METAL USBL S/N EFF, 27,28,30 AND UP	4
4	PAOZZ	96906	MS51860-56	NUT,PLAIN,HEXAGON	4
5	PBOZZ	97403	13211E9388	COVER,ACCESS	2
6	PAOZZ	96906	MS27183-10	WASHER,FLAT	26
7	PAOZZ	96906	MS90728-5L	BOLT,SELF-LOCKING	8
8	PAOZZ	96906	MS51507A8	ELBOW,TUBE	4
9	PAOZZ	97403	13211E8881	TUBE ASSEMBLY,METAL	1
10	PAOZZ	97403	13214E1972	STRAP,RETAINING	4
11	PAOZZ	96906	MS35333-41	WASHER,LOCK	38
12	PAOZZ	96906	MS51975-10	SCREW,SHOULDER	24
13	PAOZZ	96906	MS21920-41	CLAMP,HOSE	2
14	PAOZZ	96906	MS28778-10	PACKING,PREFORMED	7
15	PAOZZ	96906	MS51527A10	ELBOW	1
16	PAOZZ	97403	13204E3768	TUBE ASSEMBLY,METAL	1
17	PAOZZ	19207	12369155	TUBE ASSEMBLY,METAL USBLE S/N EFF 27,28,30 AND UP	2
17	PAOZZ	19207	12334822	TUBE ASSEMBLY,METAL USBL S/N EFF,1 THRU 26,29	2
18	PAOZZ	19207	12369154	TUBE ASSEMBLY,METAL USBL S/N EFF 27,28,30 AND UP	2
18	PAOZZ	19207	12334821	TUBE ASSEMBLY,METAL USBL S/N EFF,1 THRU 26,29	2
19	PAOZZ	19207	12325766	TUBE ASSEMBLY,METAL	1
20	PAOZZ	96906	MS51505A8	ELBOW,TUBE	4
21	PAOZZ	97403	13211E8929	TUBE ASSEMBLY,METAL	1
22	PAOZZ	97403	13211E8928	TUBE ASSEMBLY,METAL	1
23	PAOZZ	96906	MS51528A24	ELBOW,TUBE TO BOSS	1
24	PAOZZ	96906	MS28778-24	PACKING,PREFORMED	1
25	PAOZZ	97403	13211E8882	TUBE ASSEMBLY,METAL	1
26	PAOZZ	97403	13214E2285	STRAP,RETAINING	2
27	PAOZZ	96906	MS90728-8L	BOLT,SELF-LOCKING	4
28	PAOZZ	97403	13214E1970	STRAP,RETAINING	2
29	PAOZZ	96906	MS51519A8S	NIPPLE,TUBE	2
30	PAOZZ	97403	13211E8880	TUBE ASSEMBLY,METAL	1
31	PAOZZ	97403	13211E8883	TUBE ASSEMBLY,METAL	1
32	PAOZZ	96906	MS90728-13L	BOLT,SELF-LOCKING	2
33	PFOZZ	97403	13214E2554	BRACKET,TUBE	1
34	PFOZZ	97403	13214E2553	BRACKET,TUBE	1
35	PAOZZ	96906	MS27183-15	WASHER,FLAT	2
36	PAOZZ	96906	MS90728-64L	BOLT,SELF-LOCKING	2
37	PAOZZ	96906	MS28778-6	PACKING,PREFORMED	26
38	PAOZZ	96906	MS51525A6	ADAPTER,STRAIGHT,TU	19
39	PAOZZ	46717	AC-1-310	ADAPTER,STRAIGHT,TU	11
40	PFOZZ	97403	13214E1984	BRACKET,HYDRAULIC-T	2

(1) ITEM NO	(2) SMR CODE	(3) CAGEC	(4) PART NUMBER	(5) DESCRIPTION AND USABLE ON CODES(UOC)	(6) QTY
41	PAOZZ	97403	13214E2750	TUBE ASSEMBLY, METAL..................	1
42	PAOZZ	97403	13214E2754	TUBE ASSEMBLY, METAL..................	1
43	PAOZZ	97403	13214E2752	TUBE ASSEMBLY, METAL..................	1
44	PAOZZ	96906	MS51525A10	ADAPTER, STRAIGHT, TU..................	4
45	PAOZZ	97403	13214E2416-3	ELBOW, TUBE TO BOSS..................	2
46	PAOZZ	19207	12332101	TUBE ASSEMBLY, METAL..................	1
47	PAOZZ	96906	MS51530A8S	TEE, TUBE TO BOSS..................	1
48	PAOZZ	96906	MS51840-26	PLUG, MACHINE THREAD..................	1
49	PAOZZ	97403	13214E2842	TUBE ASSEMBLY, METAL..................	1
50	PAOZZ	96906	MS51523A8	TEE, TUBE..................	1
51	PAOZZ	97403	13211E8879	TUBE ASSEMBLY, METAL..................	1
52	PAOZZ	97403	13211E8877	TUBE ASSEMBLY, METAL..................	1
53	PAOZZ	97403	13211E8878	TUBE ASSEMBLY, METAL..................	1
54	PAOZZ	97403	13211E8876	TUBE ASSEMBLY, METAL..................	1
55	PAOZZ	97403	13211E8875	TUBE ASSEMBLY, METAL..................	1
56	PAOZZ	97403	13214E2753	TUBE ASSEMBLY, METAL..................	1
57	PAOZZ	97403	13214E2751	TUBE ASSEMBLY, METAL..................	1
58	PAOZZ	97403	13214E1971	STRAP, RETAINING..................	2
59	PAOZZ	96906	MS90728-11L	BOLT, SELF-LOCKING..................	12
60	PAOZZ	97403	13214E2755	TUBE ASSEMBLY, METAL..................	1
61	PAOZZ	96906	MS51528A6	ELBOW, TUBE TO BOSS..................	4
62	PAOZZ	97403	13214E1982	TUBE ASSEMBLY, METAL..................	1
63	PAOZZ	97403	13214E1978	TUBE ASSEMBLY, METAL..................	1
64	PAOZZ	97403	13214E1968	STRAP, RETAINING..................	4
65	PAOZZ	96906	MS51975-9	SCREW, SHOULDER..................	14
66	PAOZZ	96906	MS51860-55	LOCKNUT, TUBE FITTIN..................	2
67	PAOZZ	96906	MS51516A6	TEE, TUBE..................	2
68	PAOZZ	19207	12334703	TUBE ASSEMBLY, METAL..................	1
69	PAOZZ	97403	13214E1969	STRAP, RETAINING..................	3
70	PAOZZ	97403	13214E1979	TUBE ASSEMBLY, METAL..................	1
71	PAOZZ	96906	MS51527A6	ELBOW, TUBE TO BOSS..................	3
72	PAOZZ	97403	13214E2816	TUBE ASSEMBLY, METAL..................	2
73	PAOZZ	97403	13214E2497-3	TEE, TUBE TO BOSS..................	2
74	PAOZZ	97403	13214E1975	TUBE ASSEMBLY, METAL..................	2
75	PAOZZ	19207	12331985	TUBE ASSEMBLY, METAL..................	1
76	PAOZZ	97403	13214E2739	TUBE ASSEMBLY, METAL..................	1
77	PAOZZ	19207	12334704	TUBE ASSEMBLY, METAL..................	2
78	PFOZZ	96906	MS51528A8S	ELBOW, TUBE TO BOSS..................	2
79	PAOZZ	97403	13214E1973	STRAP, RETAINING..................	4
80	PFOZZ	97403	13214E1985	BRACKET, HYDRAULIC T..................	4
81	PAOZZ	19207	12334694	TUBE ASSEMBLY, METAL..................	1
82	PAOZZ	97403	13214E2820	TUBE ASSEMBLY, METAL..................	2
83	PAOZZ	19207	12334702	TUBE ASSEMBLY, METAL..................	2
84	PAOZZ	97403	13214E2416-5	ELBOW, TUBE TO BOSS..................	2
85	PAOZZ	97403	13214E2497-4	TEE, TUBE TO BOSS..................	2
86	PAOZZ	97403	13214E2802	VALVE, RELIEF, PRESSU..................	2
87	PAOZZ	97403	13214E2824	UNION, TUBE..................	2
88	PFOZZ	98441	0503-10-8	ADAPTER, STRAIGHT, TU..................	2
89	PAOZZ	97403	13211E8914-5	TEE, TUBE TO BOSS..................	2
90	PAOZZ	97403	13214E1977	TUBE ASSEMBLY, METAL..................	1
91	PAOZZ	97403	13214E1980	TUBE ASSEMBLY, METAL..................	1
92	PAOZZ	97403	13214E1976-1	TUBE ASSEMBLY, METAL..................	1

(1) ITEM NO	(2) SMR CODE	(3) CAGEC	(4) PART NUMBER	(5) DESCRIPTION AND USABLE ON CODES(UOC)	(6) QTY
93	PAOZZ	97403	13214E2497-1	TEE,TUBE TO BOSS	1
94	PAOZZ	97403	13214E2614	TUBE ASSEMBLY,METAL	1
95	PAOZZ	97403	13214E2823	TUBE ASSEMBLY,METAL	1
96	PAOZZ	97403	13214E2822	TUBE ASSEMBLY,METAL	1
97	PAOZZ	97403	13214E1981	TUBE ASSEMBLY,METAL	1

END OF FIGURE

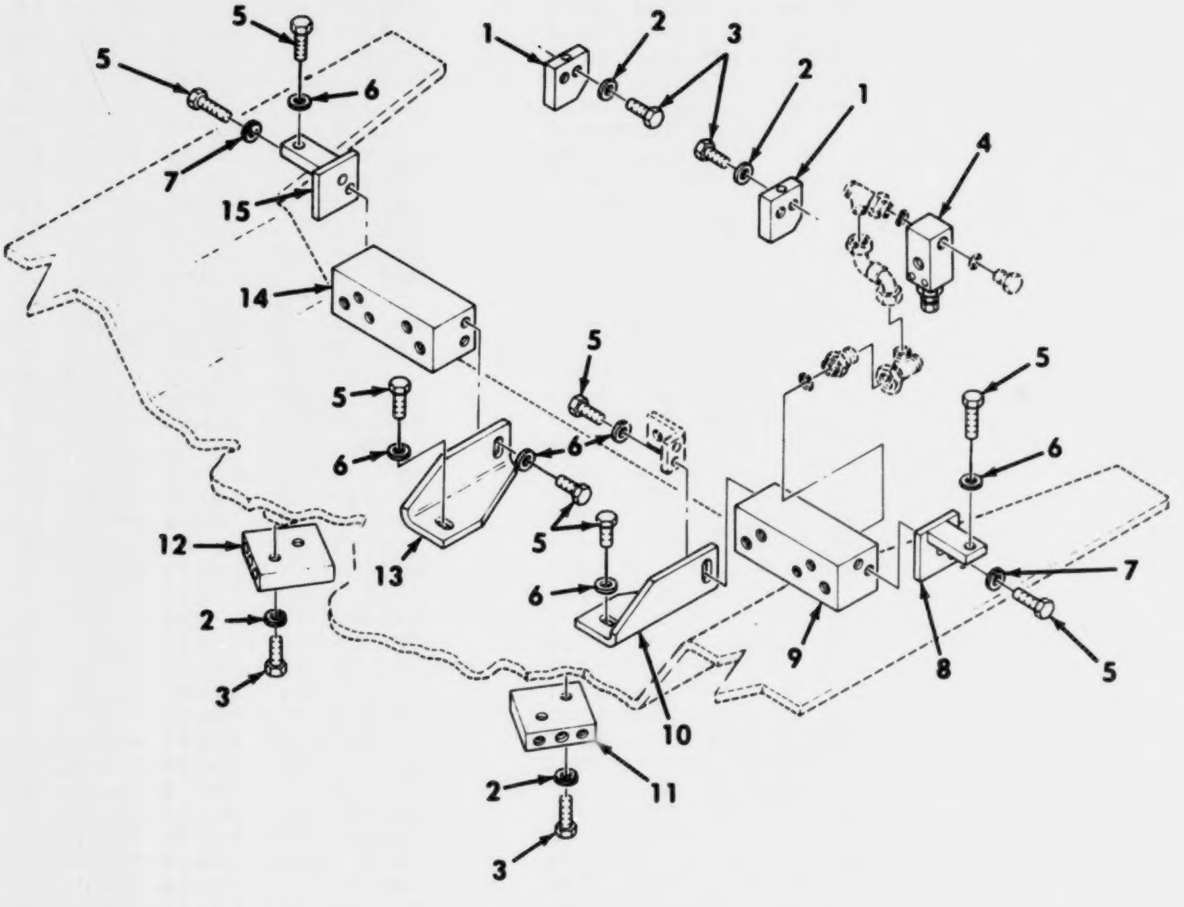

Figure 79. Hydraulic Manifolds and Mounting Parts.

(1) ITEM NO	(2) SMR CODE	(3) CAGEC	(4) PART NUMBER	(5) DESCRIPTION AND USABLE ON CODES(UOC)	(6) QTY
				GROUP AR: HYDRAULIC INSTALLATION FIG.79 HYDRAULIC MANIFOLDS AND MOUNTING PARTS	
1	PFOZZ	97403	13214E1974	MANIFOLD,VALVE,DRAI	2
2	PAOZZ	96906	MS27183-14	WASHER,FLAT	8
3	PAOZZ	96906	MS90728-66L	BOLT,SELF-LOCKING	8
4	PAOZZ	8Z296	1A32F8T60S22	VALVE,RELIEF,PRESSU	1
5	PAOZZ	96906	MS90728-110L	BOLT,SELF-LOCKING	12
6	PAOZZ	96906	MS27183-18	WASHER,FLAT	8
7	PFOZZ	88044	AN960XC816	WASHER,FLAT	4
8	PFOZZ	97403	13214E2728	BRACKET,ANGLE	1
9	PAOZZ	97403	13214E2765	MANIFOLD,HYDRAULIC	1
10	PFOZZ	97403	13214E2764	BRACKET,ANGLE	1
11	PAOZZ	97403	13214E2736-1	MANIFOLD,HYDRAULIC	1
12	PAOZZ	97403	13214E2736-2	MANIFOLD,HYDRAULIC	1
13	PFOZZ	97403	13214E2763	BRACKET,ANGLE	1
14	PAOZZ	97403	13214E2766	MANIFOLD,HYDRAULIC	1
15	PFOZZ	97403	13214E2717	BRACKET,ANGLE	1

END OF FIGURE

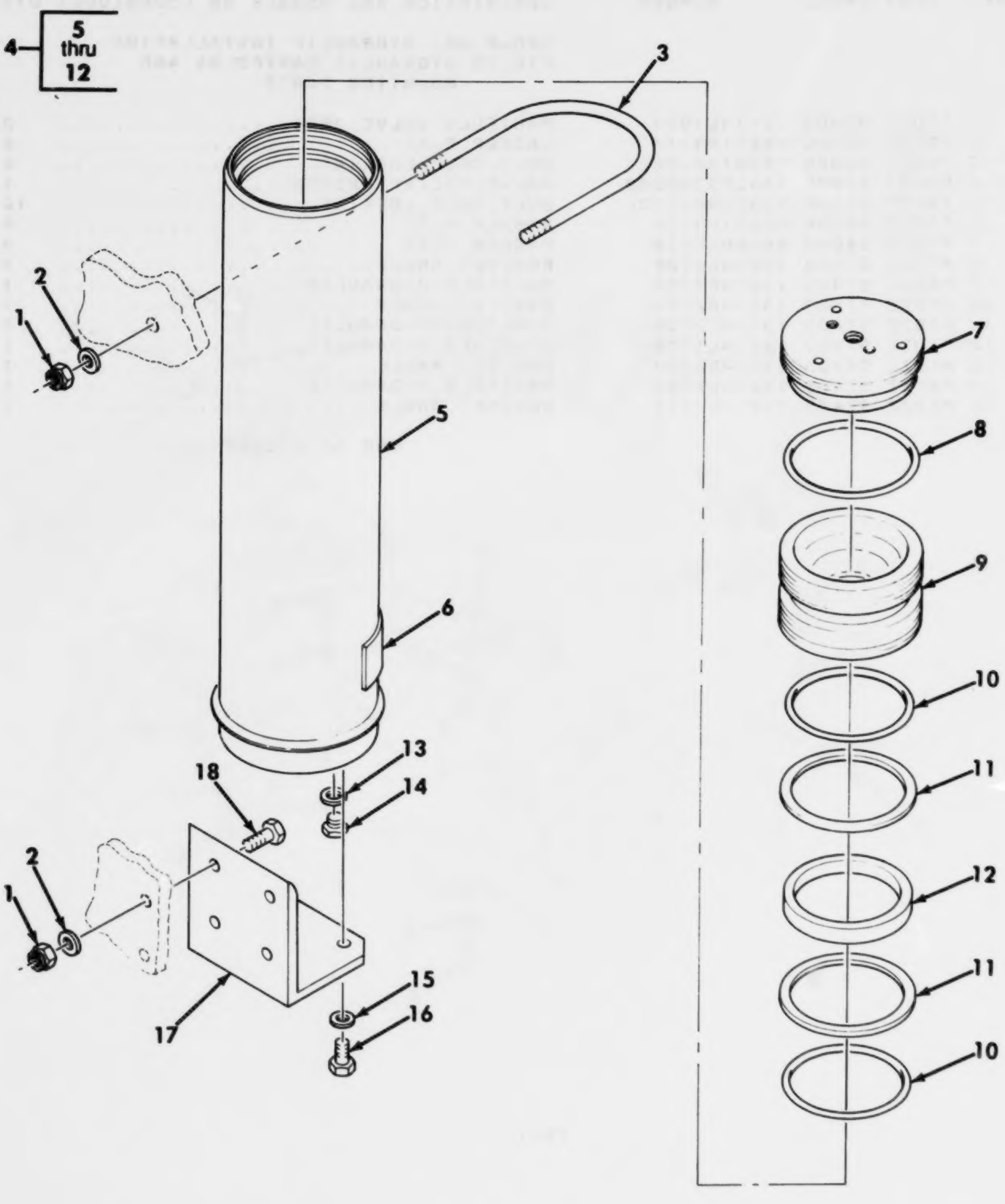

Figure 80. Main Accumulator Assembly and Mounting Parts.

(1) ITEM NO	(2) SMR CODE	(3) CAGEC	(4) PART NUMBER	(5) DESCRIPTION AND USABLE ON CODES(UOC)	(6) QTY
				GROUP AR: HYDRAULIC INSTALLATION FIG.80 MAIN ACCUMULATOR ASSEMBLY AND MOUNTING PARTS	
1	PAOZZ	96906	MS17829-6C	NUT,SELF-LOCKING,HE..................	6
2	PAOZZ	96906	MS27183-14	WASHER,FLAT..........................	6
3	PAOZZ	97403	13214E2709	BOLT,U...............................	1
4	PAOFF	84561	A6R0578B530	ACCUMULATOR,HYDRAUL..................	1
5	XAFZZ	84561	6760930000	.BODY................................	1
6	PFOZZ	64575	5423520001	.PLATE,IDENTIFICATIO.................	1
7	XAFZZ	84561	6760950000	.CAP,GAS.............................	1
8	KFFZZ	84561	0118860548	.PACKING,PREFORMED PART OF KIT P/N 5705406..........................	1
9	XAFZZ	84561	6560910000	.PISTON..............................	1
10	KFFZZ	84561	5621970000	.RING,PISTON PART OF KIT P/N 5705406	2
11	KFFZZ	84561	6560930000	.RING,PACKING PART OF KIT P/N 5705406..........................	2
12	KFFZZ	84561	6561010000	.PACKING,PREFORMED PART OF KIT P/N 5705406..........................	1
13	PAOZZ	96906	MS28778-4	PACKING,PREFORMED....................	1
14	PAOZZ	96906	MS24391-4	PLUG,MACHINE THREAD..................	1
15	PAOZZ	96906	MS27183-18	WASHER,FLAT..........................	2
16	PAOZZ	96906	MS90727-109L	BOLT,SELF-LOCKING....................	2
17	PFOZZ	19207	12352613	BRACKET,HOSE.........................	1
18	PAOZZ	96906	MS90728-64	SCREW,CAP,HEXAGON H..................	4

END OF FIGURE

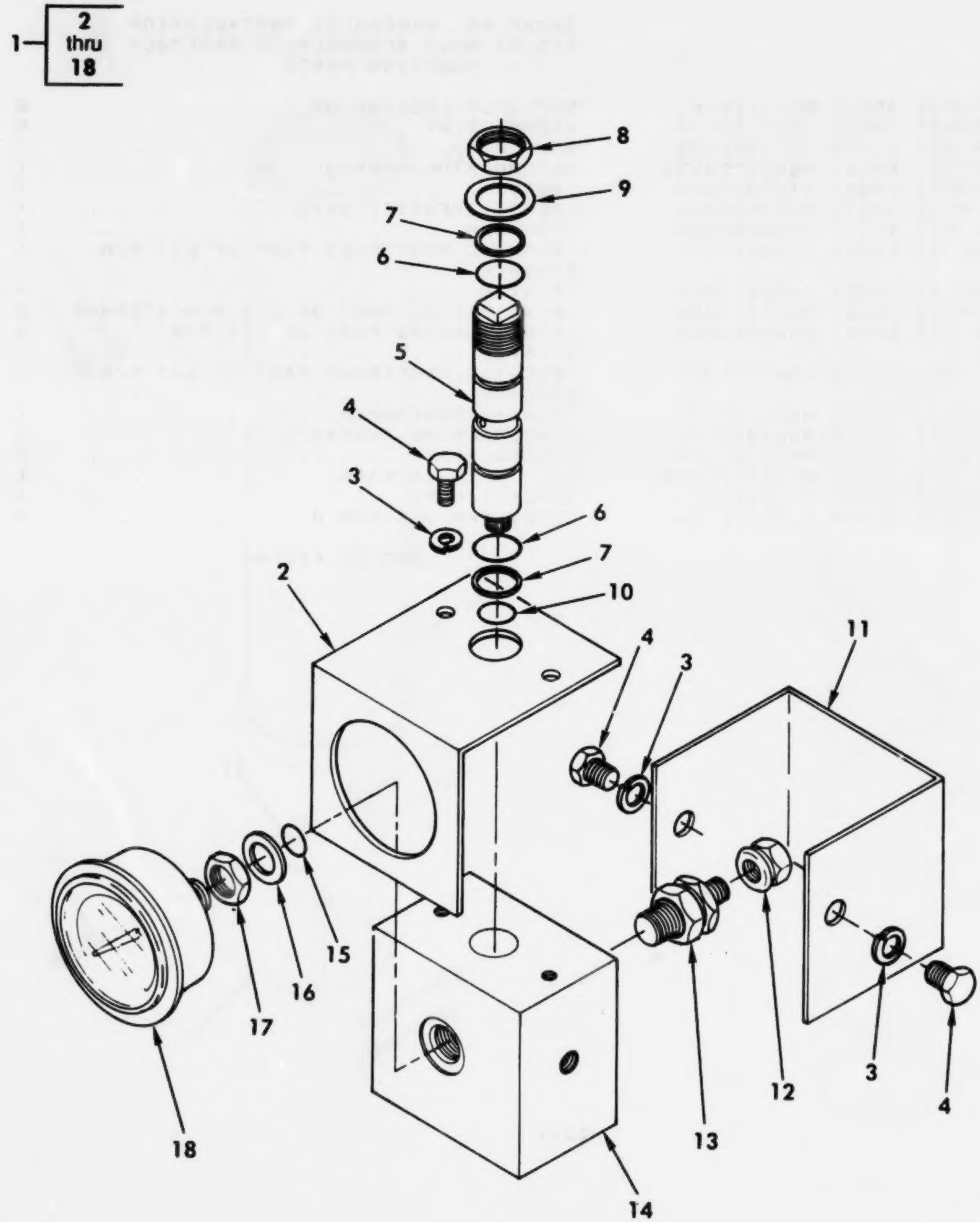

Figure 81. Accumulator Charge and Gage Assembly.

(1) ITEM NO	(2) SMR CODE	(3) CAGEC	(4) PART NUMBER	(5) DESCRIPTION AND USABLE ON CODES(UOC)	(6) QTY
				GROUP AR: HYDRAULIC INSTALLATION FIG.81 ACCUMULATOR CHARGE AND GAGE ASSEMBLY	
1	PAOOO	57517	JOC1888	MANIFOLD,CHARGING,G..................	1
2	PFOZZ	57517	1888-03	.FRAME..............................	1
3	PAOZZ	96906	MS35338-46	.WASHER,LOCK........................	4
4	PAOZZ	96906	MS35307-358	.SCREW,CAP,HEXAGON H................	4
5	XAOZZ	57517	1888-02	.SHAFT..............................	1
6	PAOZZ	96906	MS28775-018	.PACKING,PREFORMED..................	2
7	PAOZZ	02697	8-018N300-90	.RETAINER,PACKING...................	2
8	PAOZZ	57517	1888-08	.NUT,PLAIN,HEXAGON..................	1
9	PAOZZ	57517	1888-09	.WASHER,FLAT........................	1
10	PAOZZ	96906	MS28775-015	.PACKING,PREFORMED..................	1
11	PFOZZ	57517	1888-04	.GUARD,CHARGE VALVE.................	1
12	PAOZZ	96906	MS20813-1	.CAP,VALVE..........................	1
13	PAOZZ	96906	MS28889-2	.VALVE,PNEUMATIC TAN................	1
14	XAOZZ	57517	1888-01	.MANIFOLD...........................	1
15	PAOZZ	96906	MS28778-5	.PACKING,PREFORMED..................	1
16	PAOZZ	96906	MS28777-5	.WASHER,FLAT........................	1
17	XAOZZ	57517	1888-07	.NUT................................	1
18	PFOZZ	57517	1888-05	.GAGE,PRESSURE,DIAL.................	1

END OF FIGURE

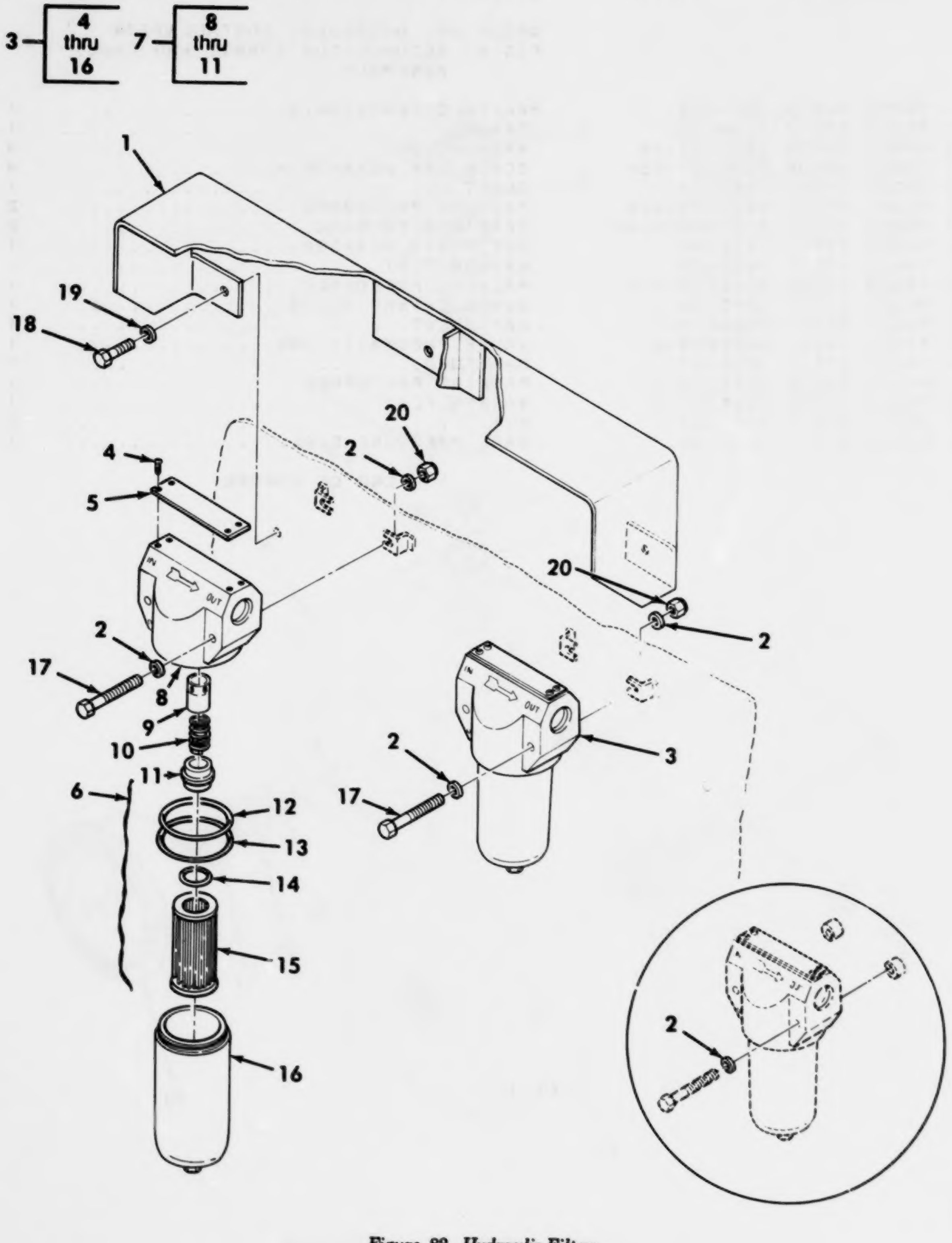

Figure 82. Hydraulic Filters.

(1) ITEM NO	(2) SMR CODE	(3) CAGEC	(4) PART NUMBER	(5) DESCRIPTION AND USABLE ON CODES(UOC)	(6) QTY
				GROUP AR: HYDRAULIC INSTALLATION FIG.82 HYDRAULIC FILTERS	
1	PFOZZ	97403	13214E2658	GUARD,FILTER........................	1
2	PAOZZ	96906	MS27183-10	WASHER,FLAT USBL EFF 1 THRU 37.....	4
2	PAOZZ	96906	MS27183-10	WASHER,FLAT USBL EFF 38 AND UP.....	8
3	PAOOO	05228	7513385	FILTER,FLUID........................	2
4	PFOZZ	96906	MS21318-14	.SCREW,DRIVE........................	4
5	PFOZZ	05228	7551681	.PLATE,IDENTIFICATIO................	1
6	MOOZZ	00624	900010-32C-AR	.WIRE,NONELECTRICAL MAKE FROM NONELECTRICAL WIRE,P/N 900010-32C...	1
7	XAOOO	05228	7551849	.HEAD ASSEMBLY......................	1
8	XAOZZ	05228	7551702	..HEAD..............................	1
9	XDOZZ	05228	7502409	..POPPET,HYDRAULIC FI...............	1
10	XAOZZ	05228	7551850	..SPRING,HELICAL,COMP...............	1
11	PFOZZ	05228	7502407	..FITTING...........................	1
12	KFOZZ	96906	MS28775-228	.PACKING PREFORMED PART OF KIT P/N 5705408..........................	1
13	KFOZZ	96906	MS28774-228	.RETAINER,PACKING PART OF KIT P/N 5705408..........................	1
14	KFOZZ	96906	MS28775-214	.PACKING,PREFORMED PART OF KIT P/N 5705408..........................	1
15	KFOZZ	05228	7513130	.ELEMENT PART OF KIT P/N 5705408....	1
16	XAOZZ	05228	7502410	.FILTER BODY,FLUID..................	1
17	PAOZZ	96906	MS90728-17L	BOLT,SELF-LOCKING...................	4
18	PAOZZ	96906	MS90728-60L	BOLT,SELF-LOCKING...................	3
19	PAOZZ	96906	MS27183-14	WASHER,FLAT.........................	3
20	PAOZZ	96906	MS17829-4C	NUT,SELF-LOCKING,HE USBL S/N EFF 1 THRU 37..........................	4

END OF FIGURE

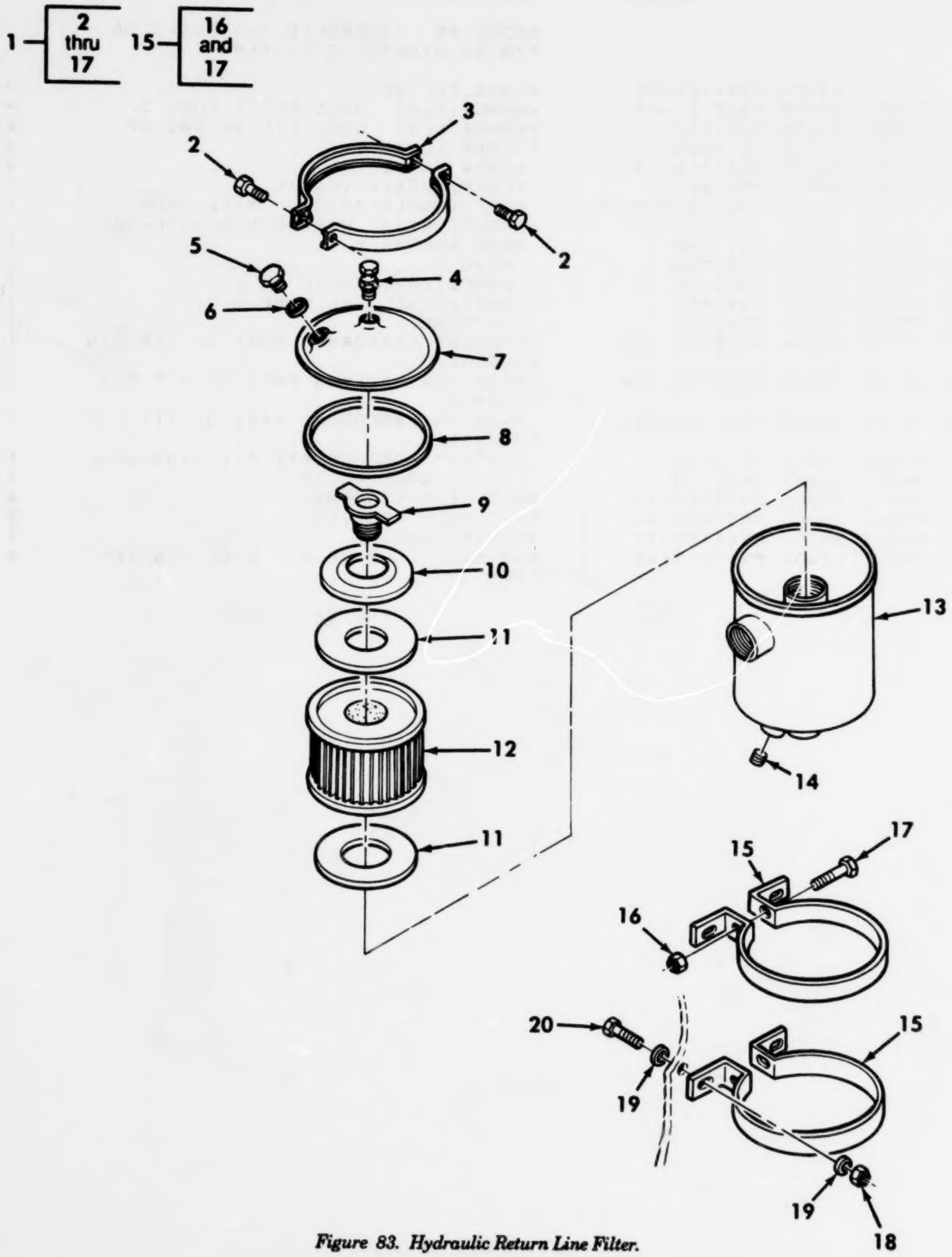

Figure 83. Hydraulic Return Line Filter.

(1) ITEM NO	(2) SMR CODE	(3) CAGEC	(4) PART NUMBER	(5) DESCRIPTION AND USABLE ON CODES(UOC)	(6) QTY
				GROUP AR: HYDRAULIC INSTALLATION FIG.83 HYDRAULIC RETURN LINE FILTER	
1	PBOOO	05228	9326079	FILTER ASSEMBLY....................	1
2	PAOZZ	96906	MS90728-66L	.BOLT,SELF-LOCKING..................	2
3	PFOZZ	64829	6654655	.CLAMP,RIM CLENCHING................	2
4	PAOZZ	81321	15002	.COCK,SHUTOFF,SCREW.................	1
5	PAOZZ	05228	9326688	.PLUG,MACHINE THREAD................	1
6	KFOZZ	11083	1H4253	.GASKET PART OF KIT P/N 5705407.....	1
7	XAOZZ	05228	60260	.COVER..............................	1
8	KFOZZ	05228	6653463	.GASKET,COVER PART OF KIT P/N 5705407.........................	1
9	PAOZZ	05228	9326077	.VALVE,SAFETY RELIEF................	1
10	PAOZZ	81321	60263	.RETAINER,FILTER....................	1
11	KFOZZ	05228	30102	.GASKET,ELEMENT PART OF KIT P/N 5705407.........................	2
12	KFOZZ	05228	7516310	.ELEMENT PART OF KIT P/N 5705407....	1
13	XAOZZ	05228	9314824	.CASE...............................	1
14	PAOZZ	81321	7886	.PLUG...............................	1
15	PFOZZ	81321	22202	.BRACKET,MOUNTING...................	2
16	PAOZZ	96906	MS17829-6C	..NUT,SELF-LOCKING,HE...............	1
17	PAOZZ	96906	MS90727-70	..SCREW,CAP,HEXAGON H...............	1
18	PAOZZ	96906	MS17829-6C	NUT,SELF-LOCKING,HE.................	4
19	PAOZZ	96906	MS27183-14	WASHER,FLAT.........................	8
20	PAOZZ	96906	MS90728-64	SCREW,CAP,HEXAGON H.................	4

END OF FIGURE

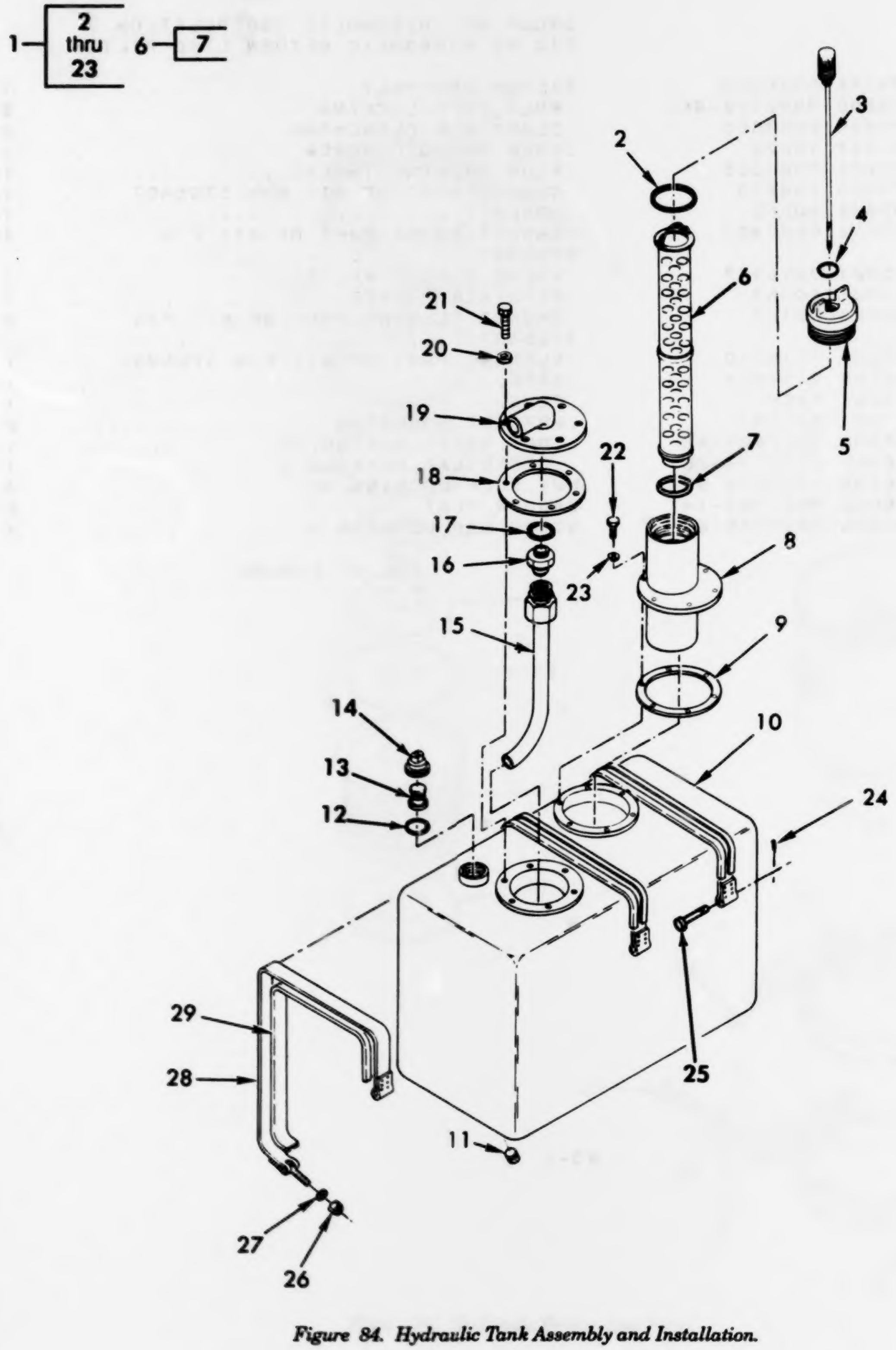

Figure 84. Hydraulic Tank Assembly and Installation.

(1) ITEM NO	(2) SMR CODE	(3) CAGEC	(4) PART NUMBER	(5) DESCRIPTION AND USABLE ON CODES(UOC)	(6) QTY
				GROUP AR: HYDRAULIC INSTALLATION FIG.84 HYDRAULIC TANK ASSEMBLY AND INSTALLATION	
1	PAFFF	97403	13211E8800	TANK,OIL,HYDRAULIC..................	1
2	PAOZZ	81349	M83461/1-342	.PACKING,PREFORMED..................	1
3	PAOZZ	19207	12325719	.GAGE ROD,LIQUID LEV................	1
4	PAOZZ	96906	MS28778-8	.PACKING,PREFORMED..................	1
5	PAOZZ	97403	13214E2734	.CAP,FILLER OPENING.................	1
6	PAOZZ	92863	M3424,REV 3.	.STRAINER ELEMENT,SE................	1
7	PAOZZ	96906	MS28775-136	..PACKING,PREFORMED.................	1
8	PFFZZ	97403	13214E2735	.HOUSING,FILTER HYDR................	1
9	PAFZZ	97403	13214E2733	.GASKET.............................	1
10	XDFFF	97403	13211E8801	.TANK...............................	1
11	PAOZZ	96906	MS49006-11	.PLUG,PIPE,MAGNETIC.................	1
12	PAFZZ	96906	MS28775-225	.PACKING,PREFORMED..................	1
13	PAFZZ	70040	850435	.VALVE,RELIEF,PRESSU................	1
14	PFFZZ	97403	13204E3629	.HOUSING,PRESSURE VA................	1
15	PFFZZ	97403	13214E2790	.TUBE ASSEMBLY,METAL................	1
16	PAFZZ	96906	MS51525A20	.ADAPTER,STRAIGHT TU................	1
17	PAFZZ	96906	MS28778-20	.PACKING,PREFORMED..................	1
18	PAFZZ	97403	13214E2789	.GASKET.............................	1
19	PFFZZ	19207	12335099	.HEAD,HYDRAULIC MOTO................	1
20	PAFZZ	96906	MS27183-14	.WASHER,FLAT........................	6
21	PAFZZ	96906	MS90728-63L	.BOLT,SELF-LOCKING..................	6
22	PAFZZ	96906	MS90728-10L	.BOLT,SELF-LOCKING..................	6
23	PAFZZ	96906	MS27183-10	.WASHER,FLAT........................	6
24	PAFZZ	96906	MS24665-283	PIN,COTTER..........................	3
25	PAFZZ	96906	MS20392-7C75	PIN,STRAIGHT,HEADED.................	3
26	PAFZZ	96906	MS17829-8C	NUT,SELF-LOCKING,HE.................	3
27	PAFZZ	96906	MS27183-18	WASHER,FLAT.........................	3
28	PFFZZ	97403	13211E8910	BAND,RETAINING......................	3
29	PAFZZ	74687	73D1857	RUBBER STRIP........................	3

END OF FIGURE

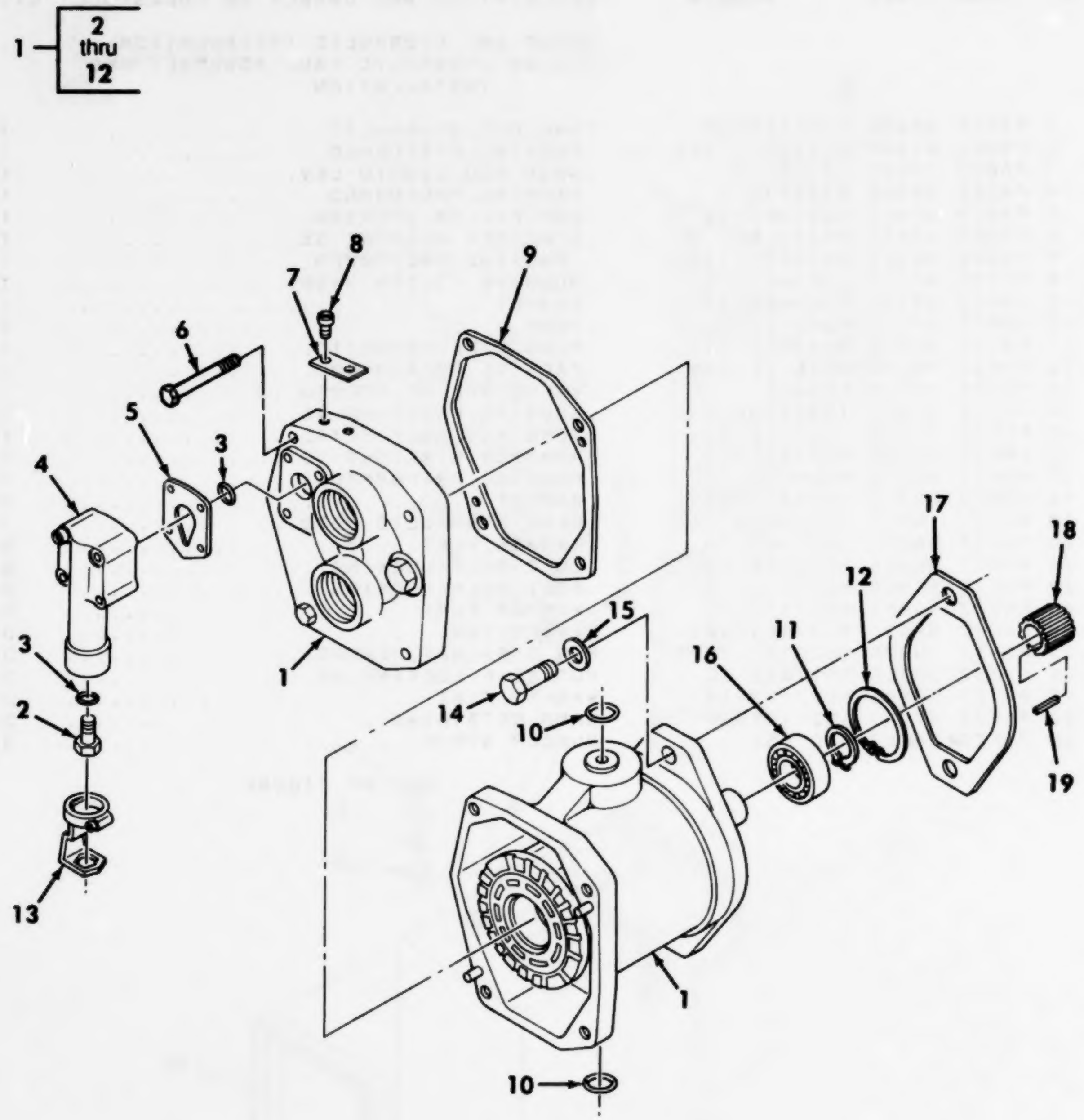

Figure 85. Compensated Pump Assembly and Installation.

(1) ITEM NO	(2) SMR CODE	(3) CAGEC	(4) PART NUMBER	(5) DESCRIPTION AND USABLE ON CODES(UOC)	(6) QTY
				GROUP AR: HYDRAULIC INSTALLATION FIG.85 COMPENSATED PUMP ASSEMBLY AND INSTALLATION	
1	PAHHH	62983	PVB10RSY31C11	PUMP,AXIAL PISTONS..................	1
2	PAHZZ	62983	360430	.PLUG,ADJUSTING......................	1
3	PAHZZ	62983	173792	.PACKING PREFORMED.................	1
4	PFHZZ	62983	942158	.COMPENSATOR.......................	1
5	PAHZZ	62983	244956	.GASKET............................	1
6	PAHZZ	62983	1276	.SCREW CAP HEXAGON.................	4
7	PFHZZ	62983	404751	.PLATE,IDENTIFICATIO...............	1
8	PAHZZ	62983	227407	.SCREW.............................	2
9	PAHZZ	62983	317162	.GASKET............................	1
10	PAHZZ	62983	166360	.PACKING,PREFORMED.................	2
11	PAHZZ	62983	119982	.RING,RETAINING....................	1
12	PAHZZ	62983	120428	.RING,RETAINING....................	1
13	PAOZZ	97403	13204E2558	CLAMP ASSEMBLY.....................	1
14	PAOZZ	96906	MS90728-112L	BOLT,SELF-LOCKING..................	2
15	PAOZZ	96906	MS27183-18	WASHER,FLAT........................	2
16	PAHZZ	52676	6206RS	BEARING,BALL,ANNULA................	1
17	PAHZZ	97403	13214E2781	GASKET.............................	1
18	PAOZZ	97403	13214E2782	ADAPTER,SPLINE.....................	1
19	PAOZZ	97403	13214E2780	KEY,MACHINE........................	1

END OF FIGURE

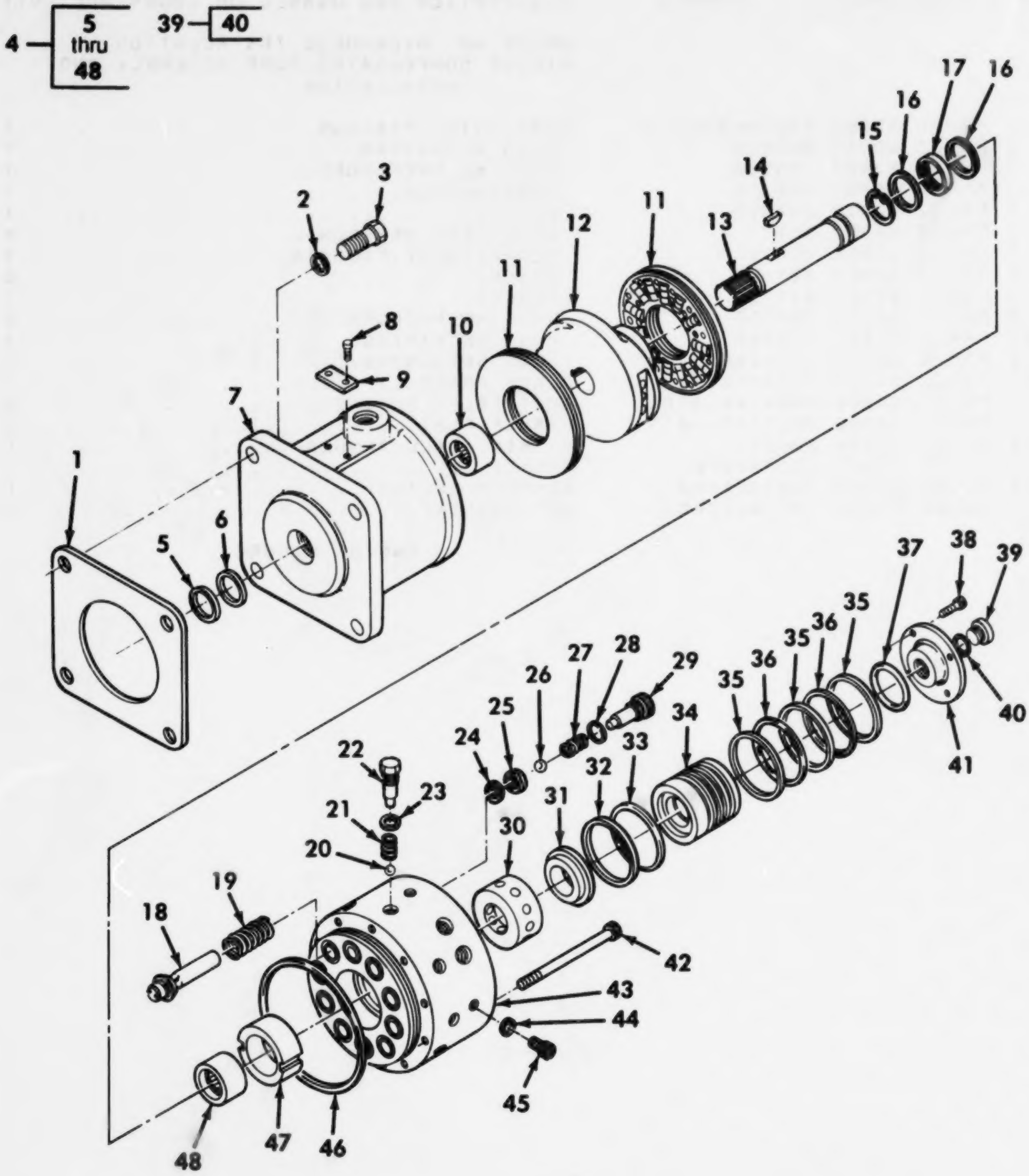

Figure 86. Main Hydraulic Pump Assembly and Mounting Parts.

(1) ITEM NO	(2) SMR CODE	(3) CAGEC	(4) PART NUMBER	(5) DESCRIPTION AND USABLE ON CODES(UOC)	(6) QTY
				GROUP AR: HYDRAULIC INSTALLATION FIG. 86 MAIN HYDRAULIC PUMP ASSEMBLY AND MOUNTING PARTS	
1	PAFZZ	97403	13214E2662	GASKET..............................	1
2	PAFZZ	81352	AN960XC1216	WASHER,FLAT.........................	4
3	PAFZZ	96906	MS16997-190L	SCREW,SELF-LOCKING..................	4
4	PAFDD	05842	PF4033-2738	PUMP,AXIAL PISTONS..................	1
5	KDDZZ	05842	H426.394	.SEAL PART OF KIT P/N KP4033-9012...	1
6	KDDZZ	05842	H425.394	.SEAL PART OF KIT P/N KP4033-9012...	1
7	PFDZZ	05842	1163.277	.HOUSING,LIQUID PUMP................	1
8	PFDZZ	05842	1001.003	.SCREW,DRIVE........................	2
9	PFDZZ	05842	1006.026	.PLATE,IDENTIFICATIO................	1
10	PADZZ	05842	H431.520	.BEARING,ROLLER,NEED................	1
11	PADZZ	05842	1027.155	.BEARING,WASHER,THRU................	2
12	XADZZ	05842	11391010	.PLATE,WOBBLE PUMP..................	1
13	PADZZ	05842	1115.288	.SHAFT,SHOULDERED...................	1
14	KDDZZ	05842	1013.325	.KEY,MACHINE PART OF KIT P/N KP4033-9012...........................	1
15	PADZZ	05842	1081.049	.RING,RETAINING.....................	1
16	PADZZ	05842	1042.155	.BEARING,WASHER,THRU................	2
17	PADZZ	05842	1034.155	.BEARING,ROLLER,NEED................	1
18	PADZZ	05842	2087.900	.SUBASSEMBLY,PISTON.................	10
19	PADZZ	05842	1068.110	.SPRING,HELICAL,COMP................	10
20	PADZZ	05842	1011.016	.BALL,BEARING.......................	10
21	PADZZ	05842	H613.183	.SPRING,HELICAL,COMP................	10
22	PFDZZ	05842	1263.006	.PLUG,ADJUSTING,BALL................	10
23	KDDZZ	05842	1906.503	.PACKING,PREFORMED PART OF KIT P/N KP4033-9012......................	10
24	PFDZZ	05842	1017.290	.SEAT,HELICAL COMPRE................	10
25	PFDZZ	05842	1137.006	.SCREW RETAINING....................	10
26	PADZZ	05842	1013.016	.BALL,OUTLET........................	10
27	PADZZ	05842	1033.110	.SPRING,HELICAL,COMP................	10
28	KDDZZ	05842	1313.503	.PACKING,PREFORMED PART OF KIT P/N KP4033-9012......................	10
29	PFDZZ	05842	1261.006	.PLUG,ADJUSTING,BALL................	10
30	PADZZ	05842	1033.290	.SEAT,VALVE.........................	1
31	PFDZZ	05842	1082.049	.RING...............................	1
32	KDDZZ	05842	1115.562	.WASHER,BACK-UP PART OF KIT P/N KP4033-9012......................	1
33	KDDZZ	05842	1096.503	.PACKING,PREFORMED PART OF KIT P/N KP4033-9012......................	1
34	PFDZZ	05842	1058.232	.BUSHING,SLEEVE.....................	1
35	KDDZZ	05842	1113.562	.WASHER,BACK-UP PART OF KIT P/N KP4033-9012......................	3
36	KDDZZ	05842	1094.503	.PACKING,PREFORMED PART OF KIT P/N KP4033-9012......................	2
37	KDDZZ	05842	1090.503	.PACKING,PREFORMED PART OF KIT P/N KP4033-9012......................	1
38	PADZZ	05842	1325.028	.SCREW,CAP,SOCKET HE................	4
39	PADZZ	05842	1008.006	.PLUG,MACHINE THREAD................	1
40	KDDZZ	05842	1908.503	..PACKING,PREFORMED PART OF KIT P/N	1

(1) ITEM NO	(2) SMR CODE	(3) CAGEC	(4) PART NUMBER	(5) DESCRIPTION AND USABLE ON CODES(UOC)	(6) QTY
				KP4033-9012.........................	
41	PFDZZ	05842	1134.098	.COVER,ACCESS.......................	1
42	PADZZ	05842	1096.028	.SCREW..............................	10
43	XADZZ	05842	1140.050	.BARREL.............................	1
44	KDDZZ	05842	1904.503	.PACKING,PREFORMED PART OF KIT P/N KP4033-9012.........................	4
45	PFDZZ	05842	1268.006	.PLUG,MACHINE THREAD................	4
46	KDDZZ	05842	1125.503	.PACKING,PREFORMED PART OF KIT P/N KP4033-9012.........................	1
47	PADZZ	05842	1056.232	.BUSHING,SLEEVE.....................	1
48	PADZZ	05842	1041.155	.BEARING,ROLLER,NEED................	1

END OF FIGURE

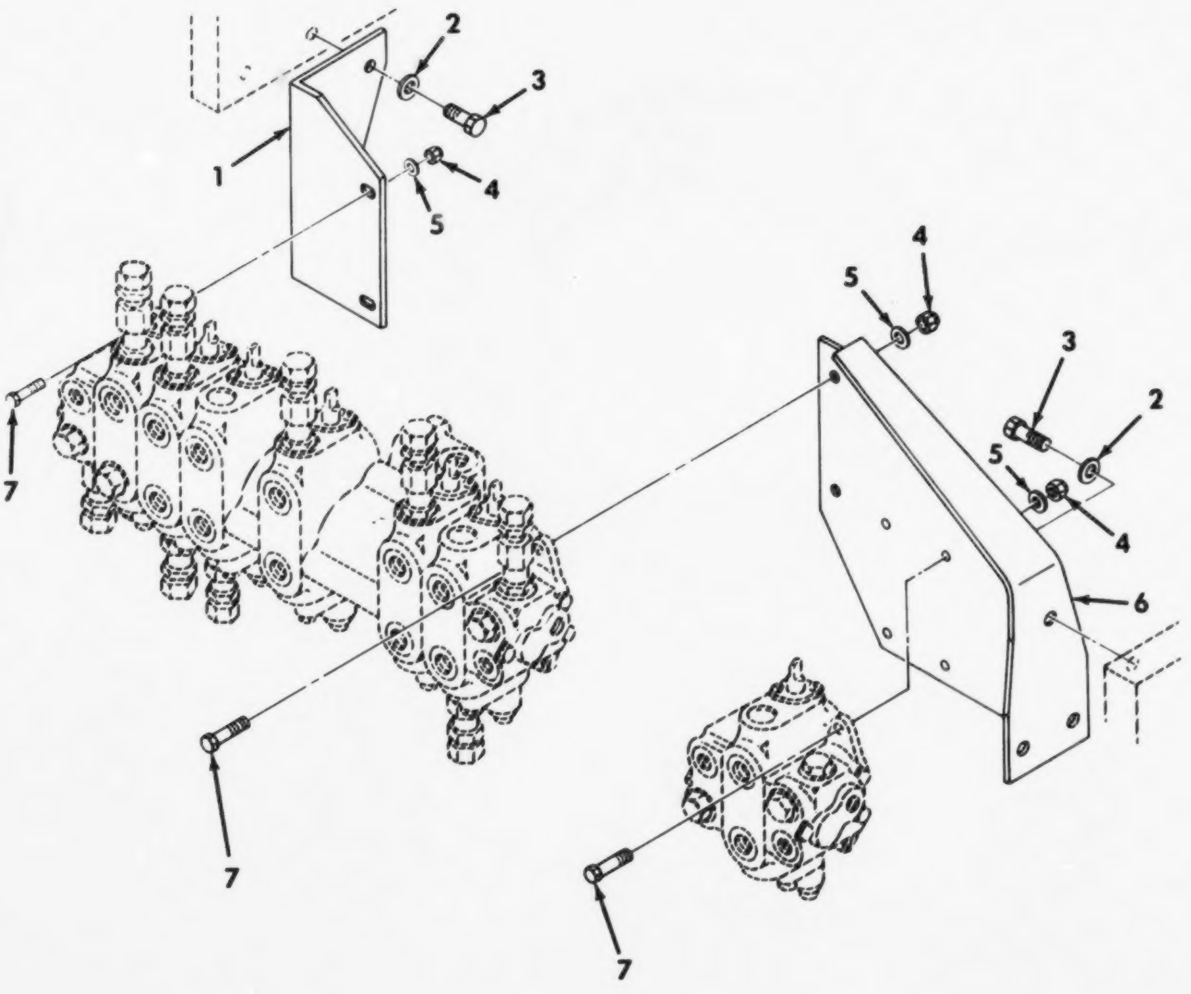

Figure 87. Hydraulic Control Valve Bank Installation.

(1) ITEM NO	(2) SMR CODE	(3) CAGEC	(4) PART NUMBER	(5) DESCRIPTION AND USABLE ON CODES(UOC)	(6) QTY
				GROUP AR: HYDRAULIC INSTALLATION FIG.87 HYDRAULIC CONTROL VALVE BANK INSTALLATION	
1	PFOZZ	97403	13211E9561	BRACKET,VALVE INBOA..................	1
2	PAOZZ	96906	MS27183-18	WASHER,FLAT..........................	5
3	PAOZZ	96906	MS90728-110L	BOLT,SELF-LOCKING....................	5
4	PAOZZ	96906	MS17829-6C	NUT,SELF-LOCKING,HE..................	8
5	PAOZZ	96906	MS27183-14	WASHER,FLAT..........................	8
6	PFOZZ	97403	13211E9562	BRACKET,VALVE OUTBO..................	1
7	PAOZZ	96906	MS90728-64	SCREW,CAP,HEXAGON H..................	8

END OF FIGURE

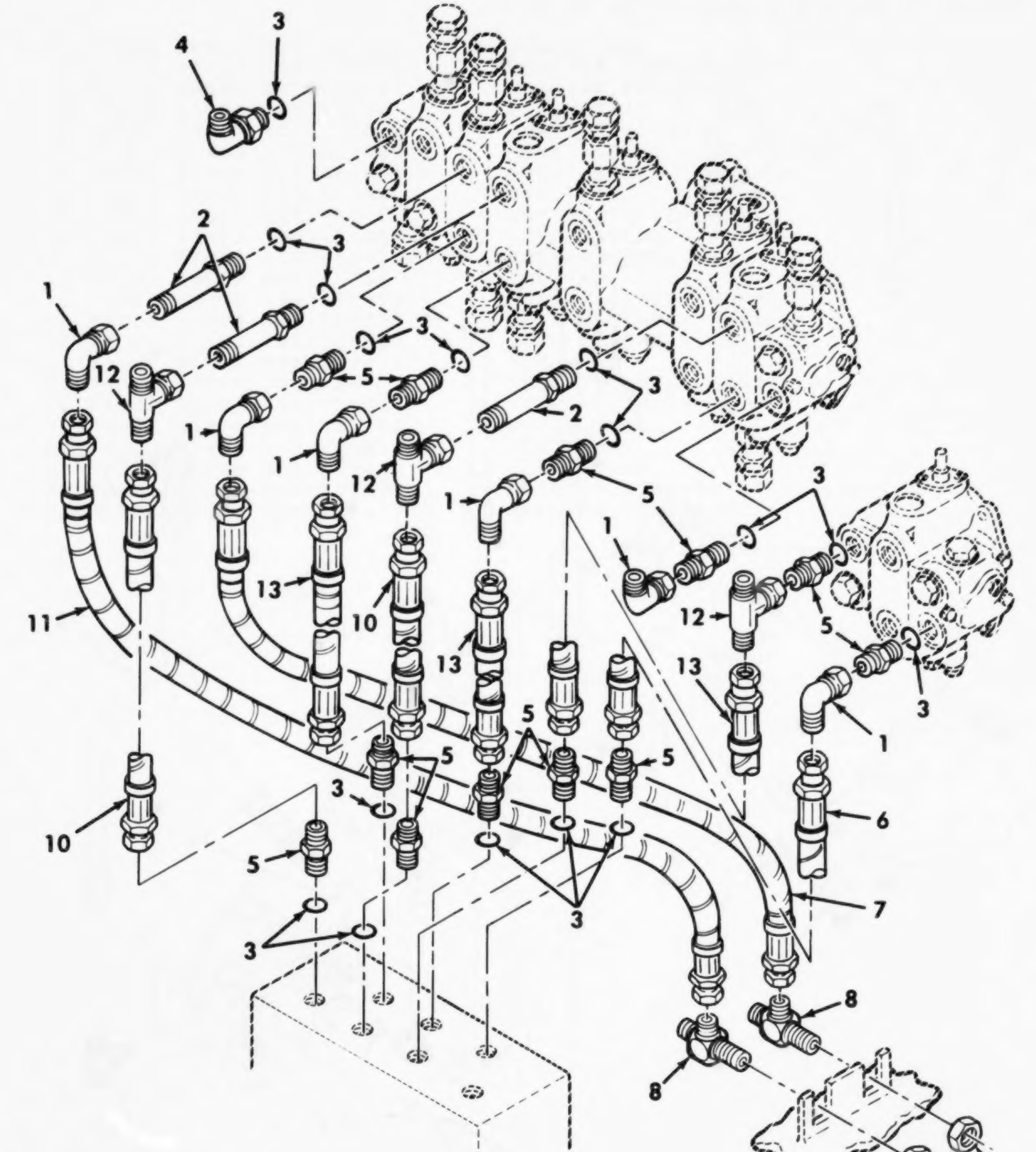

Figure 88. Valve Bank Lines and Fittings (Sheet 1 of 2).

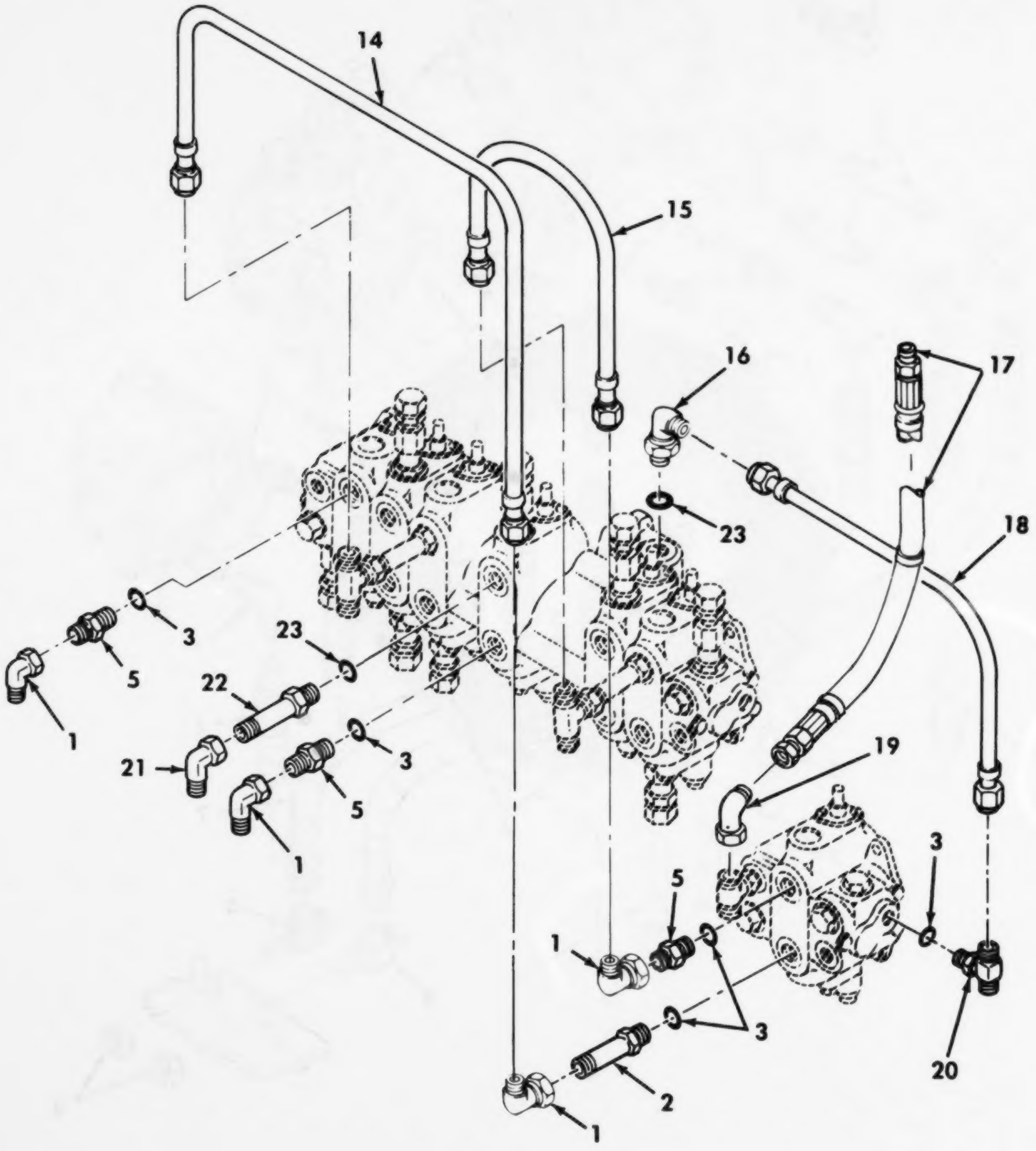

Figure 88. Valve Bank Lines and Fittings (Sheet 2 of 2).

(1) ITEM NO	(2) SMR CODE	(3) CAGEC	(4) PART NUMBER	(5) DESCRIPTION AND USABLE ON CODES(UOC)	(6) QTY
				GROUP AR: HYDRAULIC INSTALLATION FIG.88 VALVE BANK LINES AND FITTINGS	
1	PAOZZ	96906	MS51521A8	ELBOW,TUBE	10
2	PAOZZ	97403	13211E9563	ADAPTER,STRAIGHT,TU	4
3	PAOZZ	96906	MS28778-8	PACKING,PREFORMED	21
4	PAOZZ	96906	MS51527A8	ELBOW,TUBE TO BOSS	1
5	PAOZZ	46717	AC-1-310	ADAPTER,STRAIGHT,TU	15
6	PAOZZ	97403	13214E2457-6	HOSE ASSEMBLY,NONME	1
7	PAOZZ	97403	13214E2457-7	HOSE ASSEMBLY,NONME	1
8	PAOZZ	96906	MS51516A8	TEE,TUBE	2
9	PAOZZ	96906	MS51860-56	NUT,PLAIN,HEXAGON	2
10	PAOZZ	97403	13214E2457-9	HOSE ASSEMBLY,NONME	1
11	PAOZZ	97403	13214E2457-10	HOSE ASSEMBLY,NONME	1
12	PAOZZ	96906	MS51524A8	TEE,TUBE	3
13	PAOZZ	97403	13214E2457-14	HOSE ASSEMBLY,NONME	1
14	PAOZZ	97403	13211E9565	TUBE ASSEMBLY,METAL	1
15	PAOZZ	97403	13211E9564	TUBE ASSEMBLY,METAL	1
16	PAOZZ	96906	MS51527A10	ELBOW	1
17	PAOZZ	19207	12335241	HOSE ASSEMBLY,NONME	1
18	PAOZZ	97403	13211E9566	TUBE ASSEMBLY,METAL	1
19	PAOZZ	96906	MS51522A8S	ELBOW,TUBE	1
20	PAOZZ	97403	13211E8914-2	TEE,PIPE	1
21	PAOZZ	96906	MS51521A10	ELBOW,TUBE	1
22	PAOZZ	96906	MS51526A10	ADAPTER,STRAIGHT,TU	1
23	PAOZZ	96906	MS28778-10	PACKING,PREFORMED	2

END OF FIGURE

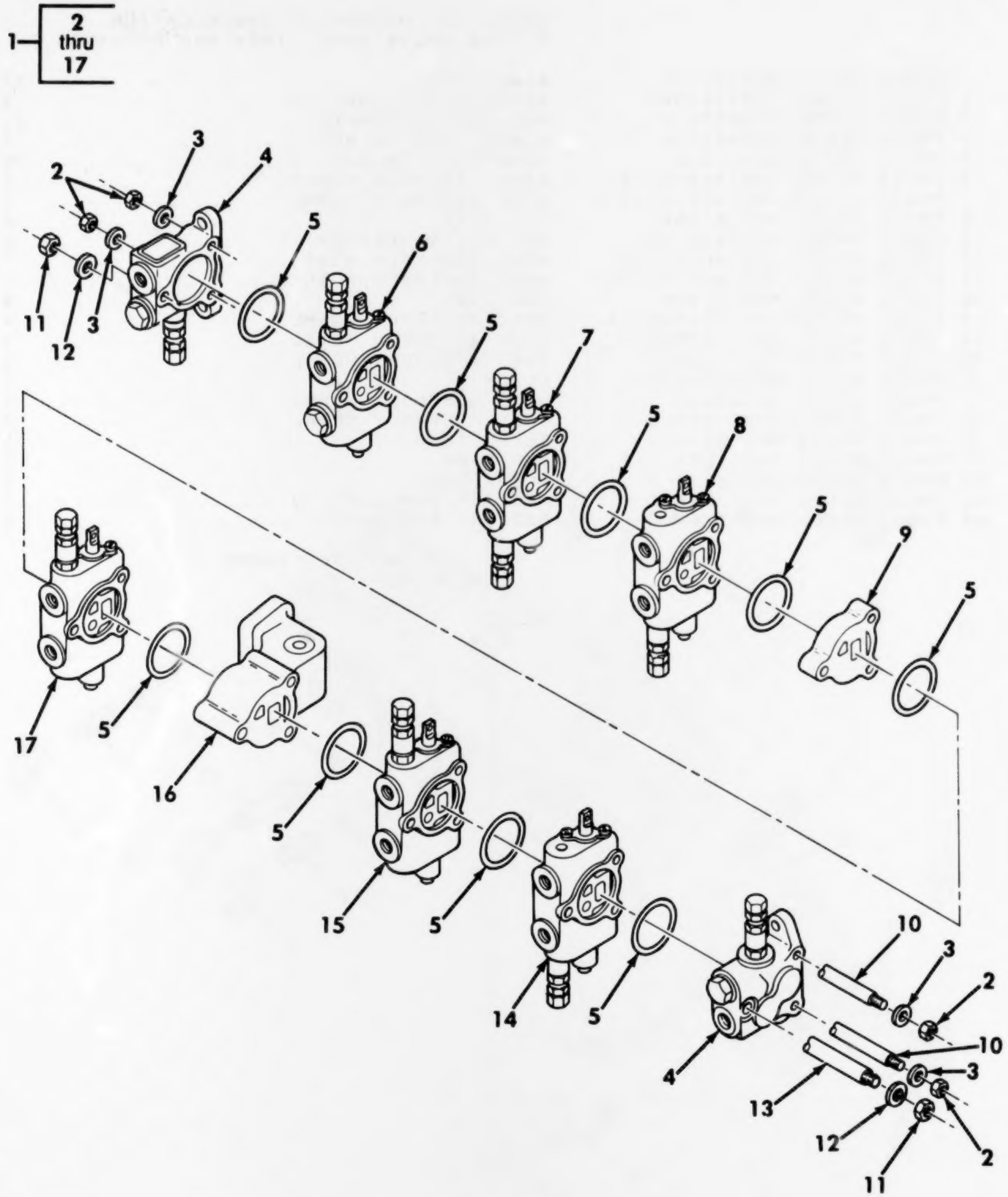

Figure 89. Directional Control Valve Bank Assembly.

GROUP AR: HYDRAULIC INSTALLATION
FIG.89 DIRECTIONAL CONTROL VALVE BANK ASSEMBLY

(1) ITEM NO	(2) SMR CODE	(3) CAGEC	(4) PART NUMBER	(5) DESCRIPTION AND USABLE ON CODES(UOC)	(6) QTY
1	PAOFF	81833	8511-050002	VALVE,LINEAR,DIRECT..................	1
2	PAFZZ	96906	MS51967-36	.NUT,PLAIN,HEXAGON..................	4
3	PAFZZ	81833	8904-000364	.WASHER,FLAT........................	4
4	PAFZZ	81833	8910-000070	.SECTION,INLET VALVE................	2
5	KFFZZ	81833	C100-228650	.PACKING, PREFORMED PART OF KIT P/N 57K1015................................	9
6	PAFZZ	81833	8910-000240	.VALVE ASSY,BILGE PU................	1
7	PAFZZ	81833	8910-000050	.VALVE ASSY,APRON...................	1
8	PAFZZ	81833	8910-000030	.VALVE ASSY,L.H.....................	1
9	PFFZZ	81833	8904-000014	.SPACER,PLATE.......................	1
10	PAFZZ	81833	8904-000344	.ROD,THREADED END...................	2
11	PAFZZ	96906	MS51968-30	.NUT,PLAIN,HEXAGON..................	2
12	PAFZZ	81833	8904-000354	.WASHER,FLAT........................	2
13	PAFZZ	81833	8904-000334	.ROD,THREADED END...................	1
14	PAFZZ	81833	8910-000060	.VALVE ASSY,R.H.....................	1
15	PAFZZ	81833	8910-000020	.VALVE ASSY,WINCH...................	1
16	PFFZZ	81833	8904-000024	.COUPLER,FLOW SECTIO................	1
17	PAFZZ	81833	8910-000040	.VALVE ASSY,EJECTOR.................	1

END OF FIGURE

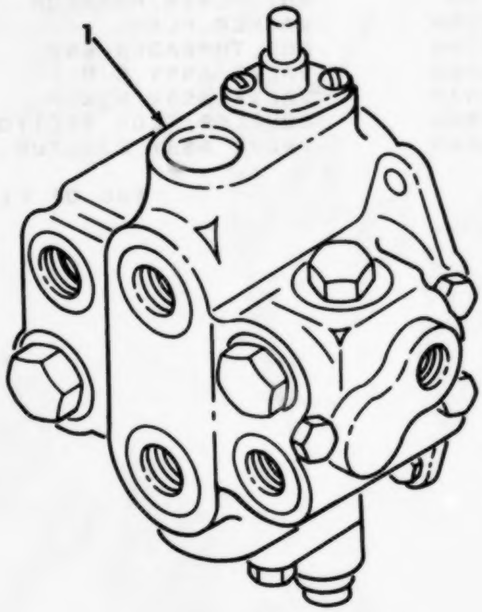

Figure 90. Sprung-Unsprung Valve Assembly.

(1) ITEM NO	(2) SMR CODE	(3) CAGEC	(4) PART NUMBER	(5) DESCRIPTION AND USABLE ON CODES(UOC)	(6) QTY
				GROUP AR: HYDRAULIC INSTALLATION FIG.90 SPRUNG-UNSPRUNG VALVE ASSEMBLY	
1	PAOZZ	81833	8211-040001	VALVE,LINEAR,DIRECT..................	1
				END OF FIGURE	

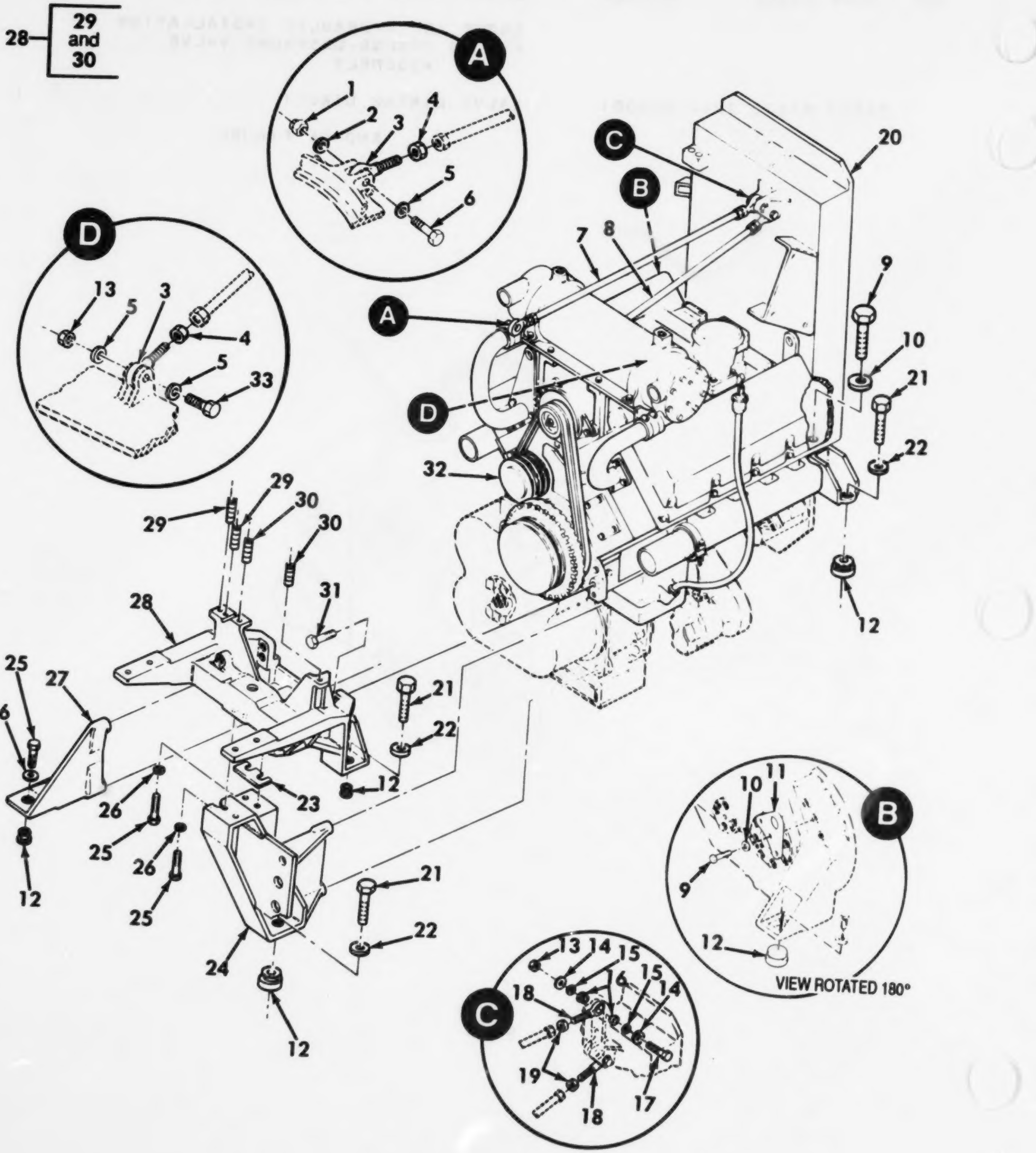

Figure 91. Power Package Mountings and Braces.

(1) ITEM NO	(2) SMR CODE	(3) CAGEC	(4) PART NUMBER	(5) DESCRIPTION AND USABLE ON CODES(UOC)	(6) QTY
				GROUP AU: POWERTRAIN INSTALLATION FIG.91 POWER PACKAGE MOUNTINGS AND BRACES	
1	PAOZZ	96906	MS51922-17	NUT,SELF-LOCKING,HE................	1
2	PAOZZ	96906	MS27183-14	WASHER,FLAT........................	1
3	PBOZZ	81349	M81935/1-08	BEARING,PLAIN,ROD E................	2
4	PAOZZ	43999	1N7-8A	NUT,PLAIN,HEXAGON..................	2
5	PAOZZ	96906	MS27183-18	WASHER,FLAT........................	3
6	PAOZZ	96906	MS21301-35	SCREW,SHOULDER.....................	1
7	PFOZZ	19207	12332028-2	ROD END,THREADED...................	1
8	PFOZZ	19207	12332028-1	TIE ROD,STEERING...................	1
9	PAFZZ	96906	MS90728-86L	BOLT,SELF-LOCKING..................	7
10	PAFZZ	96906	MS27183-16	WASHER,FLAT........................	7
11	PFFZZ	19207	12335107	BRACKET,ENGINE MOUN................	1
12	PAFZZ	76005	J6198-3	MOUNT,RESILIENT....................	5
13	PAOZZ	96906	MS51967-14	NUT,PLAIN,HEXAGON..................	3
14	PAOZZ	88044	AN970-8	WASHER,FLAT........................	4
15	PAOZZ	96906	MS9320-14	WASHER,FLAT........................	4
16	PAOZZ	76005	J-3830-6	BUSHING,SLEEVE.....................	4
17	PAOZZ	96906	MS90728-122L	BOLT,SELF-LOCKING..................	2
18	PBOZZ	81349	M81935/1-08L	BEARING,PLAIN,ROD E................	2
19	PAOZZ	88044	AN316-8L	NUT,PLAIN,HEXAGON..................	2
20	PBFZZ	19207	12362070	SUPPORT,FILTER.....................	1
21	PAFZZ	96906	MS90728-193L	BOLT,SELF-LOCKING..................	5
22	PAFZZ	97403	13204E3555	WASHER,RECESSED....................	5
23	PFFZZ	97403	13214E2671	SHIM...............................	V
24	PFFZZ	97403	13214E2669	BRACKET,ENGINE.....................	1
25	PAFZZ	96906	MS90728-187L	BOLT,SELF-LOCKING..................	4
26	PAFZZ	96906	MS27183-23	WASHER,FLAT........................	4
27	PFFZZ	97403	13214E2186	SUPPORT,TRANSMISSIO................	1
28	PFFZZ	19207	12357242	BRACKET,ENGINE ACCE................	1
29	PAFZZ	96906	MS51830A108	.INSERT............................	2
30	PAFZZ	96906	MS51831-204	.INSERT,SCREW THREAD...............	2
31	PAFZZ	80205	NAS632-18	BOLT,SHEAR.........................	4
32	PAFHD	19207	5705564	ENGINE W/CONTAINER SEE TM5-2815-240-34&P..................	1
33	PAOZZ	96906	MS90728-118L	BOLT,SELF-LOCKING..................	1

END OF FIGURE

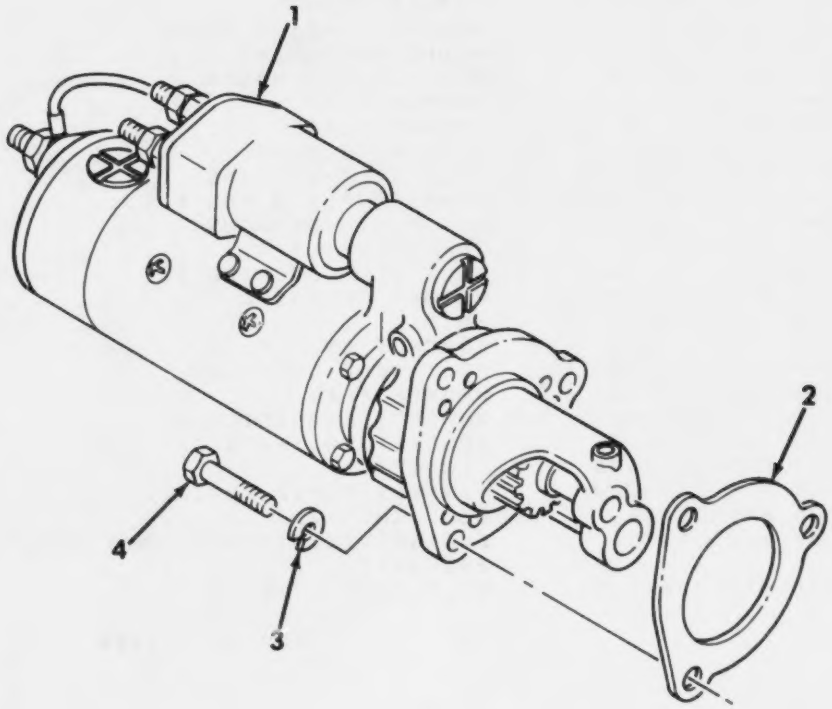

Figure 92. Starter and Mounting Parts.

(1) ITEM NO	(2) SMR CODE	(3) CAGEC	(4) PART NUMBER	(5) DESCRIPTION AND USABLE ON CODES(UOC)	(6) QTY
				GROUP AU: POWERTRAIN INSTALLATION FIG.92 STARTER AND MOUNTING PARTS	
1	PAOFH	96906	MS53011-1	STARTER,ENGINE,ELEC SEE TM 9-2920-242-35 (DELCO), TM 9-2920-243-34 (LEECE-NEVILLE), TM 9-2920-248-35 (PRESTOLITE)........................	1
2	PAOZZ	19207	10889926	GASKET PART OF KIT P/N 3801539......	1
3	PAOZZ	96906	MS35338-145	WASHER,LOCK...........................	3
4	PAOZZ	81349	M24240/3-21014	SCREW,MACHINE.........................	3

END OF FIGURE

1— 2 thru 4

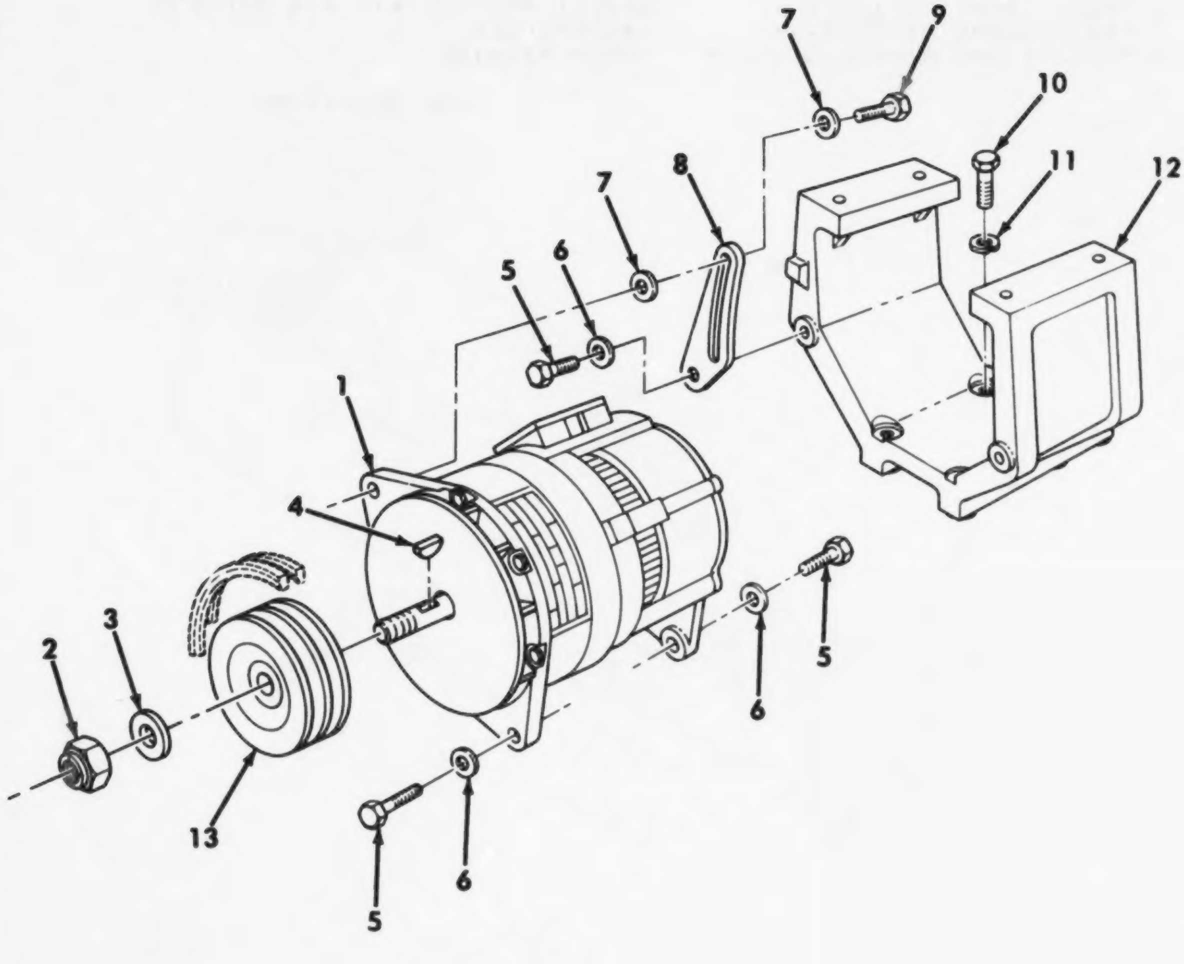

Figure 93. Generator, Bracket, and Related Parts.

(1) ITEM NO	(2) SMR CODE	(3) CAGEC	(4) PART NUMBER	(5) DESCRIPTION AND USABLE ON CODES(UOC)	(6) QTY
				GROUP AU: POWERTRAIN INSTALLATION FIG.93 GENERATOR, BRACKET, AND RELATED PARTS	
1	PAOFF	19207	10929868	GENERATOR,ENGINE AC SEE TM 9-2920-225-34P FOR BREAKDOWN (DS LEVEL)....	1
2	PAOZZ	96906	MS21245L10	.NUT,SELF-LOCKING,HE.................	1
3	PAOZZ	96906	MS15795-820	.WASHER,FLAT....................	1
4	PAOZZ	96906	MS35756-8	.KEY,WOODRUFF....................	1
5	PAOZZ	96906	MS90728-87L	BOLT,SELF-LOCKING..................	3
6	PAOZZ	96906	MS27183-16	WASHER,FLAT......................	3
7	PAOZZ	96906	MS27183-14	WASHER,FLAT......................	2
8	PBOZZ	19207	12331901	STRAP,RETAINING...................	1
9	PAOZZ	96906	MS90728-64L	BOLT,SELF-LOCKING..................	1
10	PAOZZ	96906	MS90727-93	SCREW,CAP,HEXAGON H................	6
11	PAOZZ	96906	MS35338-47	WASHER,LOCK......................	6
12	PBOZZ	15434	3047101	SUPPORT,GENERATOR..................	1
13	PAOZZ	19207	12331904	PULLEY,GROOVE....................	1

END OF FIGURE

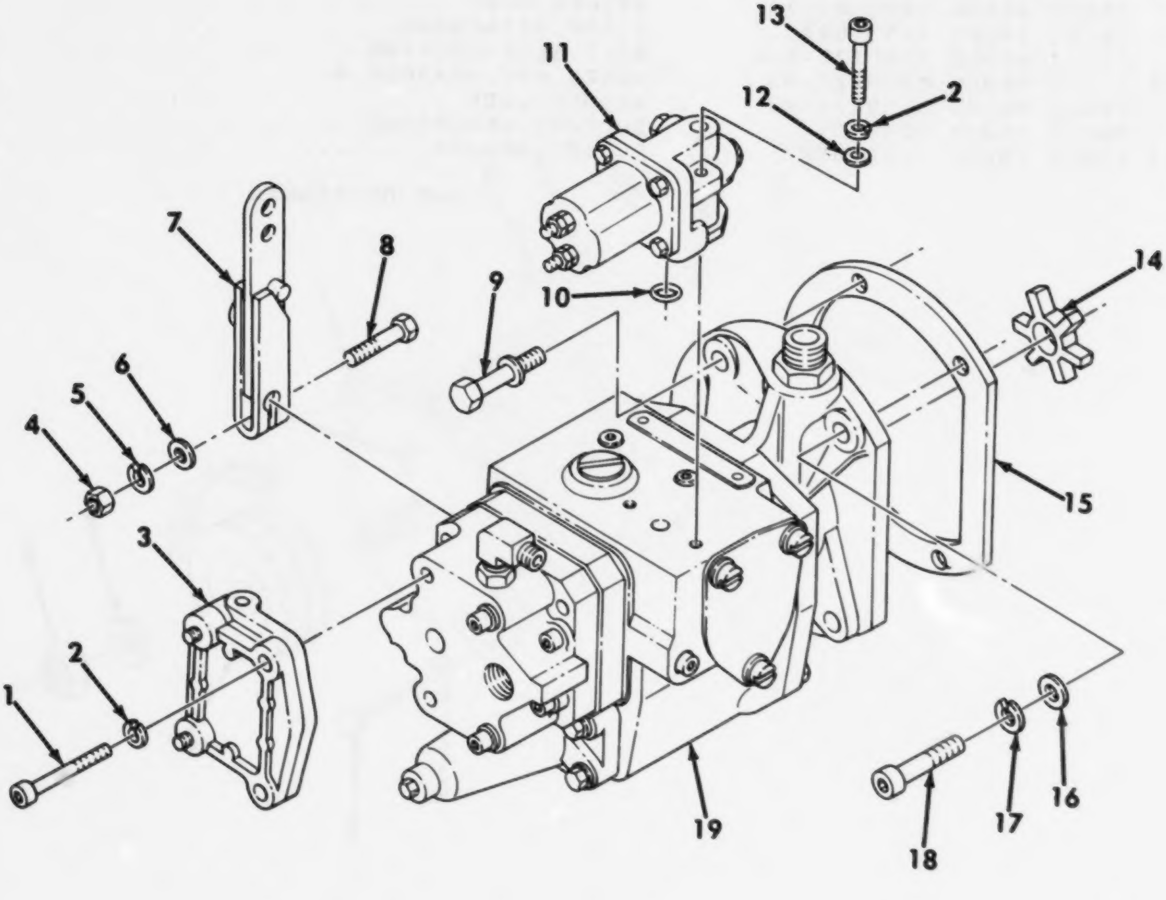

(Refer to TM 5-2815-240-34&P for parts illustrated but not listed in this figure)

Figure 94. Fuel Pump, Shutdown Valve, Damper, and Mounting Parts.

(1) ITEM NO	(2) SMR CODE	(3) CAGEC	(4) PART NUMBER	(5) DESCRIPTION AND USABLE ON CODES(UOC)	(6) QTY
				GROUP AU: POWERTRAIN INSTALLATION FIG.94 FUEL PUMP, SHUTDOWN VALVE, DAMPER, AND MOUNTING PARTS (REFER TO TM5-2815-240-34&P FOR PARTS ILLUSTRATED BUT NOT LISTED IN THIS FIGURE)	
2	PAOZZ	15434	181466	WASHER,LOCK	4
10	PAOZZ	15434	154087	GASKET	1
11	PAOZZ	15434	3035344	VALVE,SOLENOID	1
12	PAOZZ	15434	67684	WASHER,FLAT	2
13	PAOZZ	15434	S189C	SCREW,CAP,SOCKET HE	2

END OF FIGURE

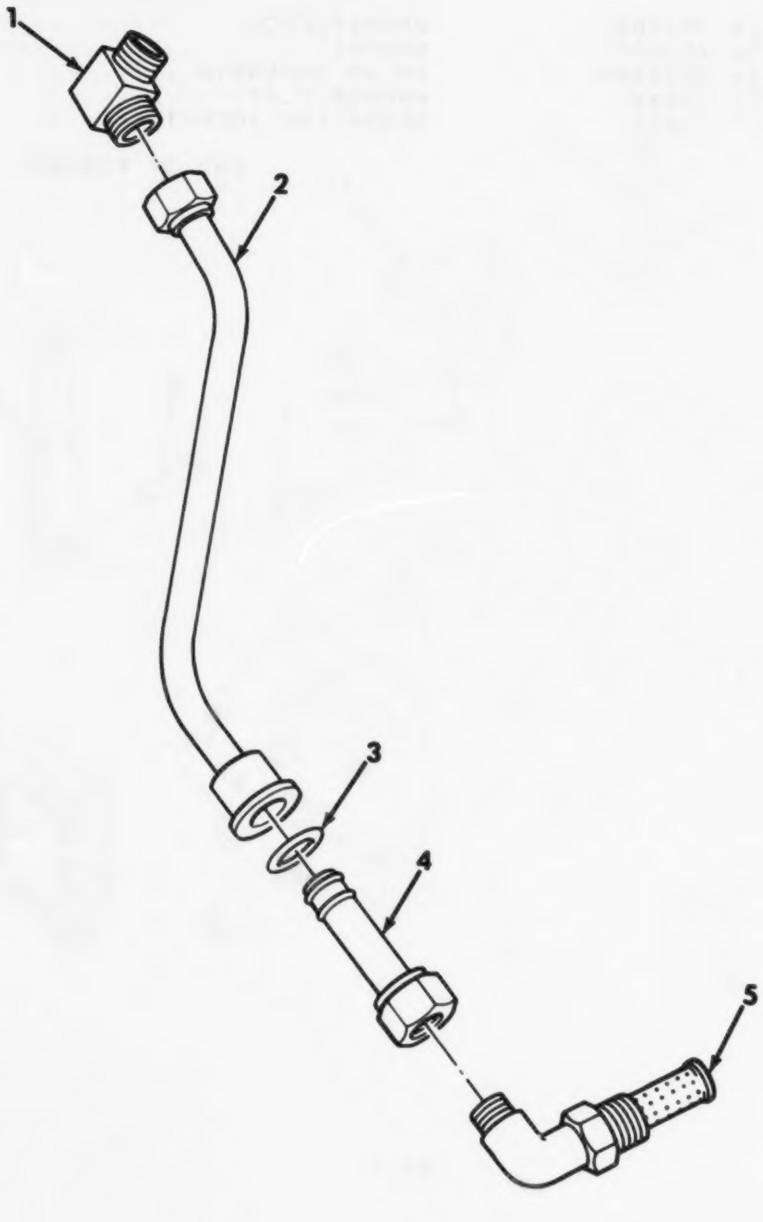

Figure 95. Engine External Oil Lines.

(1) ITEM NO	(2) SMR CODE	(3) CAGEC	(4) PART NUMBER	(5) DESCRIPTION AND USABLE ON CODES(UOC)	(6) QTY
				GROUP AU: POWERTRAIN INSTALLATION FIG.95 ENGINE EXTERNAL OIL LINES	
1	PFOZZ	15434	183649	ELBOW,PIPE TO TUBE..................	1
2	PAOZZ	15434	3045140	TUBE ASSEMBLY,METAL.................	1
3	PAOZZ	15434	3038058	PACKING,PREFORMED...................	1
4	PAOZZ	15434	3038055	TUBE ASSEMBLY,METAL.................	1
5	PAOZZ	15434	216354	ELBOW,TUBE..........................	1

END OF FIGURE

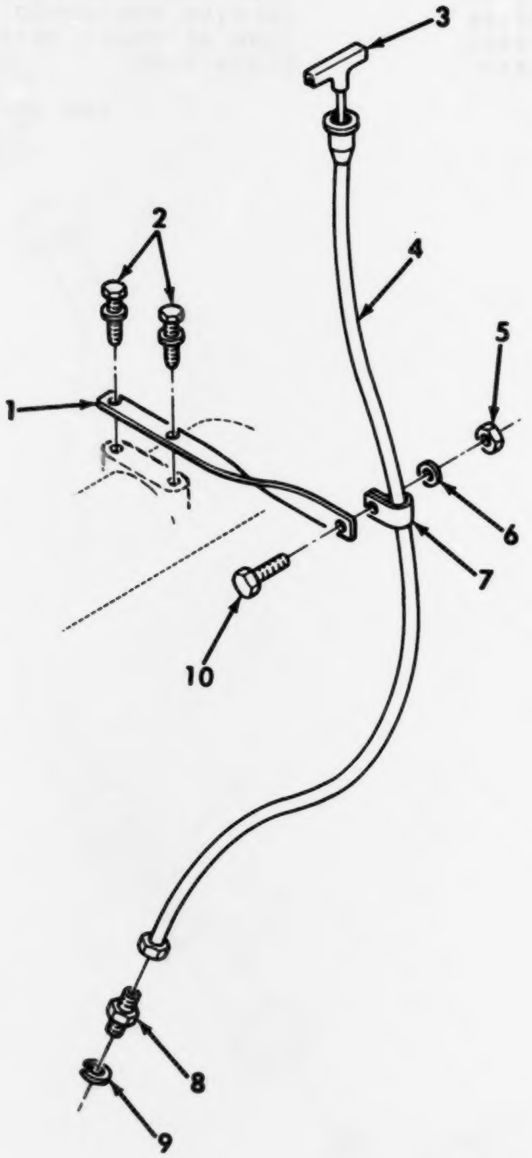

Figure 96. Oil Level Indicator.

(1) ITEM NO	(2) SMR CODE	(3) CAGEC	(4) PART NUMBER	(5) DESCRIPTION AND USABLE ON CODES(UOC)	(6) QTY
				GROUP AU: POWERTRAIN INSTALLATION FIG.96 OIL LEVEL INDICATOR	
1	PFOZZ	15434	3041946	SUPPORT,TUBE,OIL LE..................	1
2	PAOZZ	15434	3010595	SCREW,MACHINE........................	2
3	PFOZZ	15434	3041949	GAGE ROD-CAP,LIQUID..................	1
4	PFOZZ	15434	3041945	TUBE,BENT,METALLIC...................	1
5	PAOZZ	15434	S223	NUT HEXAGON..........................	1
6	PAOZZ	96906	MS27183-14	WASHER,FLAT..........................	1
7	PAOZZ	15434	68152B	CLIP,SPRING TENSION..................	1
8	PAOZZ	15434	163759	ADAPTER,STRAIGHT,TU..................	1
9	PAOZZ	15434	S604	WASHER,LOCK..........................	1
10	PAOZZ	96906	MS18154-59	SCREW,CAP,HEXAGON H..................	1

END OF FIGURE

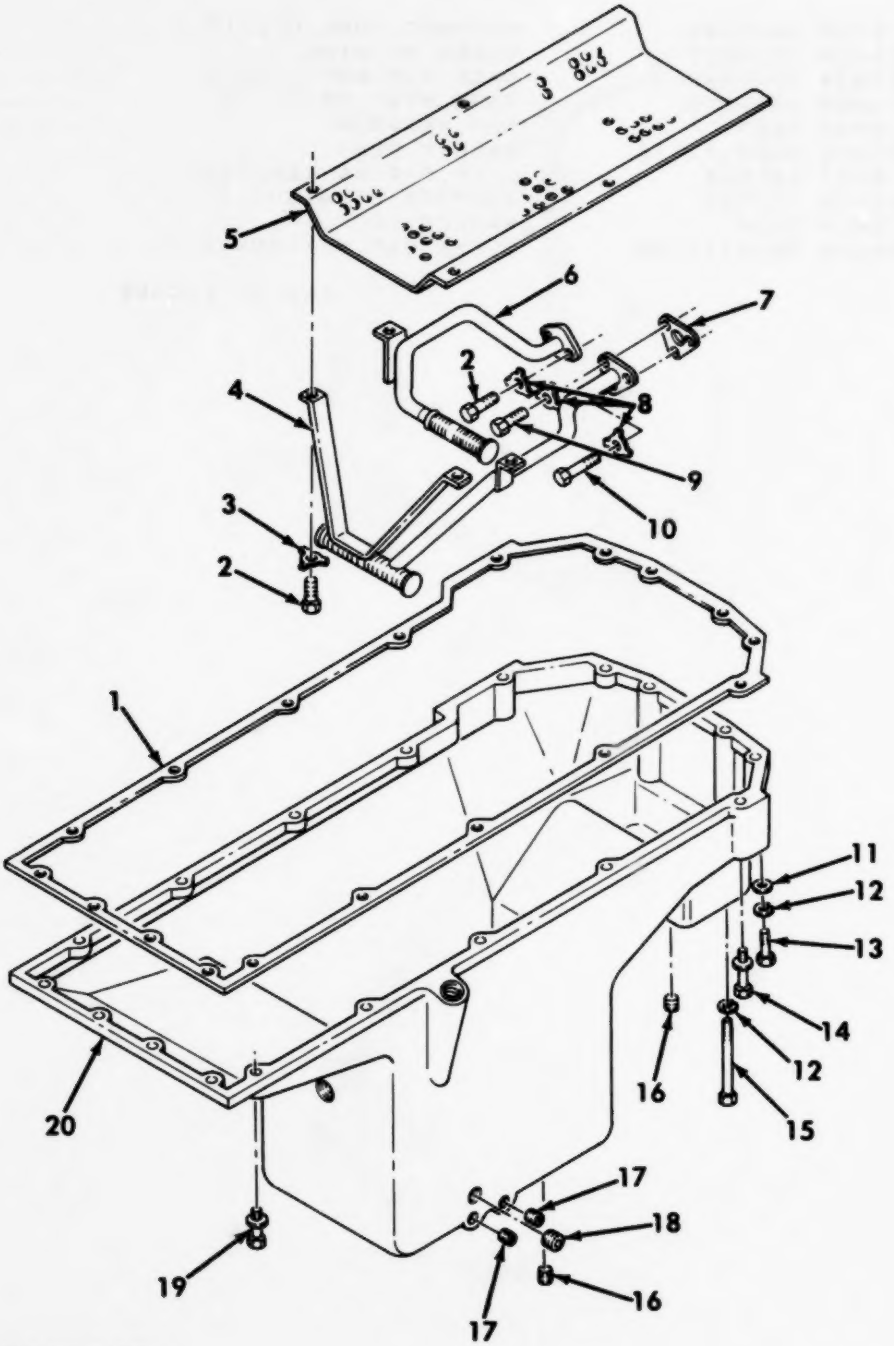

(Refer to TM 5-2815-240-34&P for parts illustrated but not listed in this figure)

Figure 97. Oil Pan.

(1) ITEM NO	(2) SMR CODE	(3) CAGEC	(4) PART NUMBER	(5) DESCRIPTION AND USABLE ON CODES(UOC)	(6) QTY
				FGROUP AU: POWERTRAIN INSTALLATION	
				FIG.97 OIL PAN	
				(REFER TO TM5-2815-240-34&P FOR PARTS ILLUSTRATED BUT NOT LISTED IN THIS FIGURE)	
16	PAOZZ	15434	69066	PLUG,MACHINE THREAD..................	2
18	PAOZZ	15434	3008470	PLUG.................................	2

END OF FIGURE

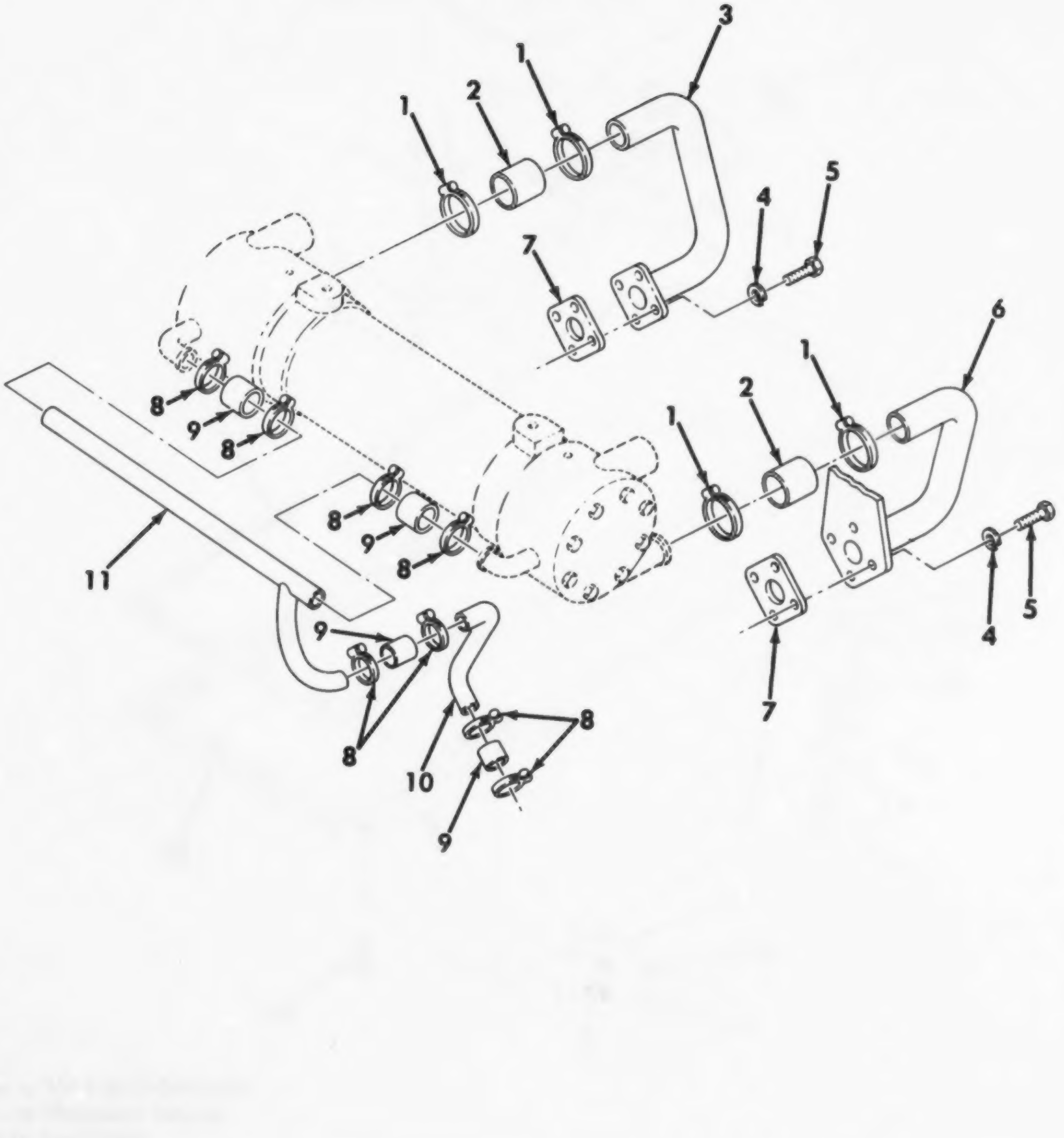

Figure 98. Engine Coolant Hoses and Clamps.

(1) ITEM NO	(2) SMR CODE	(3) CAGEC	(4) PART NUMBER	(5) DESCRIPTION AND USABLE ON CODES(UOC)	(6) QTY
				GROUP AU: POWERTRAIN INSTALLATION FIG.98 ENGINE COOLANT HOSES AND CLAMPS	
1	PAOZZ	96906	MS35842-13	CLAMP,HOSE..........................	4
2	MOOZZ	81349	M62217/1-36-4	HOSE,NONMETALLIC MAKE FROM HOSE,P/ N M62217/1-36......................	2
3	PFOZZ	15434	3047104	TUBE ASSEMBLY,METAL.................	1
4	PAOZZ	96906	MS35338-46	WASHER,LOCK.........................	8
5	PAOZZ	96906	MS90728-63	SCREW,CAP,HEXAGON H.................	8
6	PFOZZ	15434	3047103	TUBE ASSEMBLY,METAL.................	1
7	PAOZZ	15434	189566	GASKET..............................	2
8	PAOZZ	96906	MS35842-11	CLAMP,HOSE..........................	8
9	MOOZZ	81349	M62217/1-16-4	HOSE,NONMETALLIC MAKE FROM HOSE,P/ N M62217/1-16 BULK.................	4
10	PFOZZ	15434	3047106	TUBE,BENT,METALLIC..................	1
11	PFOZZ	15434	3047105	TUBE,BENT,METALLIC..................	1

END OF FIGURE

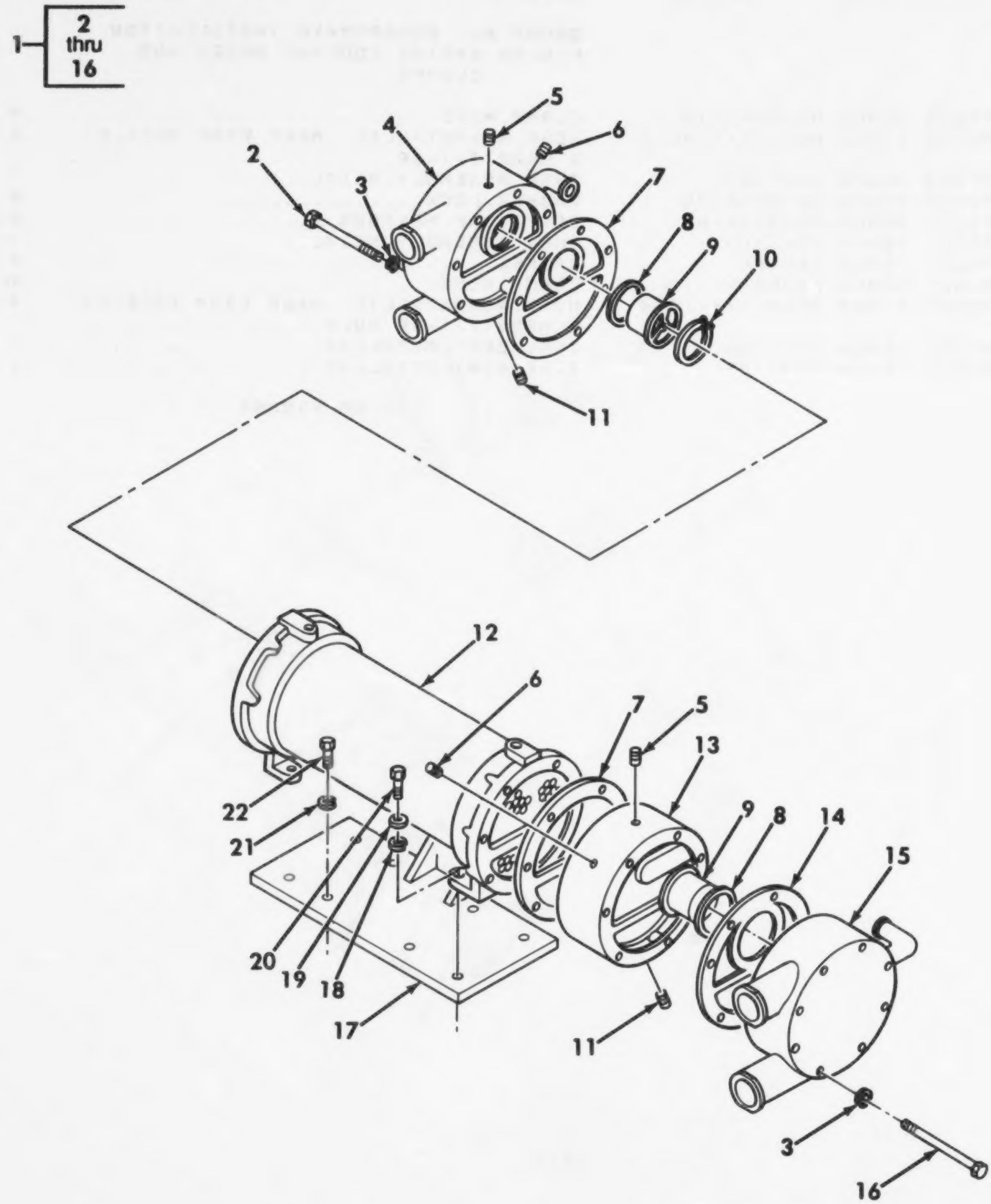

(Refer to TM 5-2815-240-34&P for parts illustrated but not listed in this figure)

Figure 99. Transmission Oil Cooler with Engine Coolant Thermostats.

(1) ITEM NO	(2) SMR CODE	(3) CAGEC	(4) PART NUMBER	(5) DESCRIPTION AND USABLE ON CODES(UOC)	(6) QTY
				GROUP AU: POWERTRAIN INSTALLATION FIG.99 TRANSMISSION OIL COOLER WITH ENGINE COOLANT THERMOSTATS (REFER TO TM5-2815-262-34&P FOR PARTS ILLUSTRATED BUT NOT LISTED IN THIS FIGURE)	
1	PAOFF	15434	3043100	COOLER ASSEMBLY,OIL.................	1
17	PFOZZ	15434	3047102	BRACKET,OIL COOLER..................	1
18	PAOZZ	96906	MS27183-16	WASHER,FLAT.........................	2
19	PAOZZ	96906	MS35338-47	WASHER,LOCK.........................	4
20	PAOZZ	96906	MS90728-87	SCREW,CAP,HEXAGON H.................	4
21	PAOZZ	96906	MS35338-48	WASHER,LOCK.........................	4
22	PAOZZ	96906	MS90728-113	SCREW,CAP,HEXAGON H.................	4

END OF FIGURE

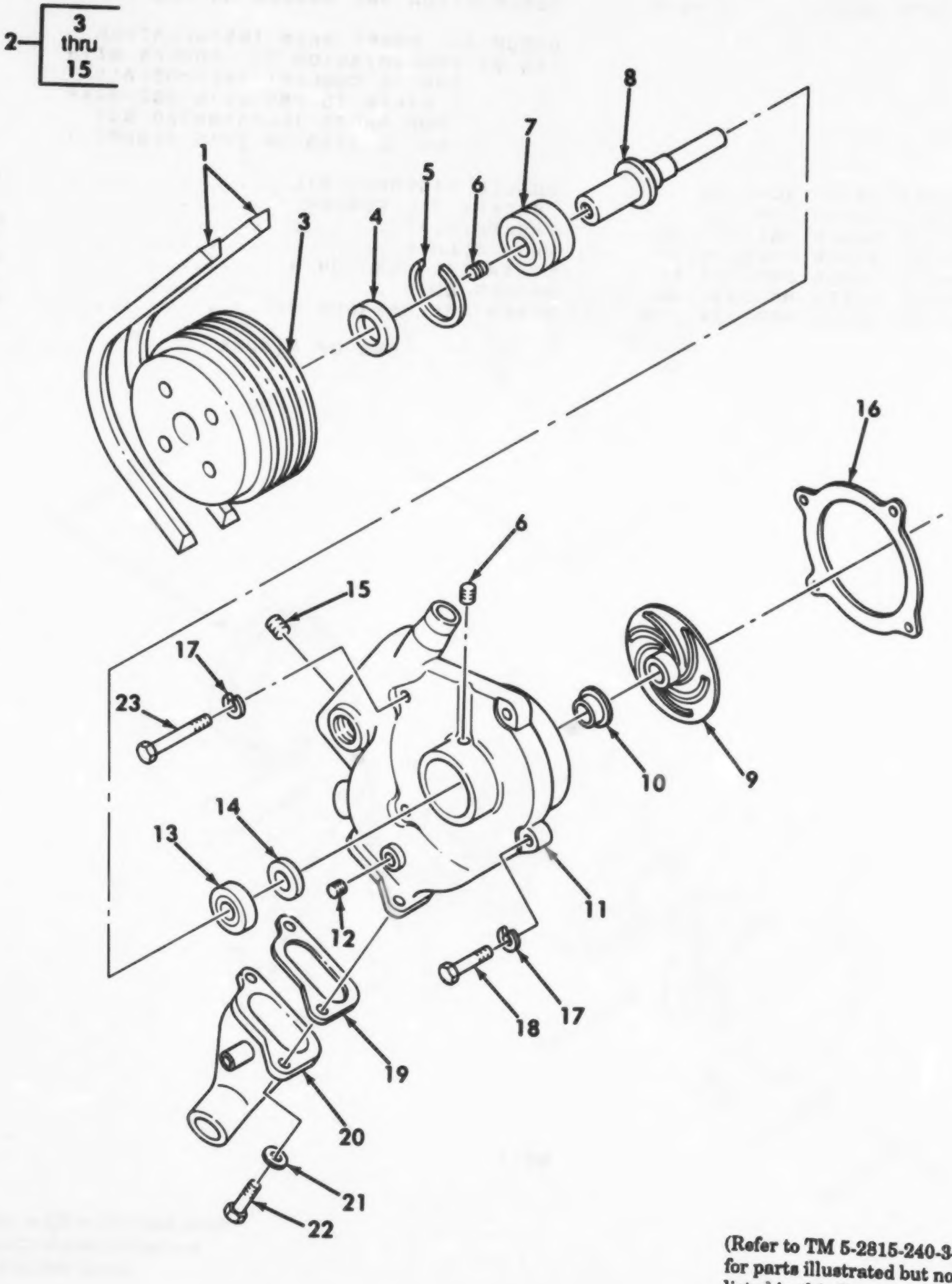

(Refer to TM 5-2815-240-34&P for parts illustrated but not listed in this figure)

Figure 100. Coolant Pump and Belts.

(1) ITEM NO	(2) SMR CODE	(3) CAGEC	(4) PART NUMBER	(5) DESCRIPTION AND USABLE ON CODES(UOC)	(6) QTY
				GROUP AU: POWERTRAIN INSTALLATION FIG.100 COOLANT PUMP AND BELTS (REFER TO TM5-2815-262-34&P FOR PARTS ILLUSTRATED BUT NOT LISTED IN THIS FIGURE)	
1	PAOZZ	15434	202045	BELTS,V,MATCHED SET................	1

END OF FIGURE

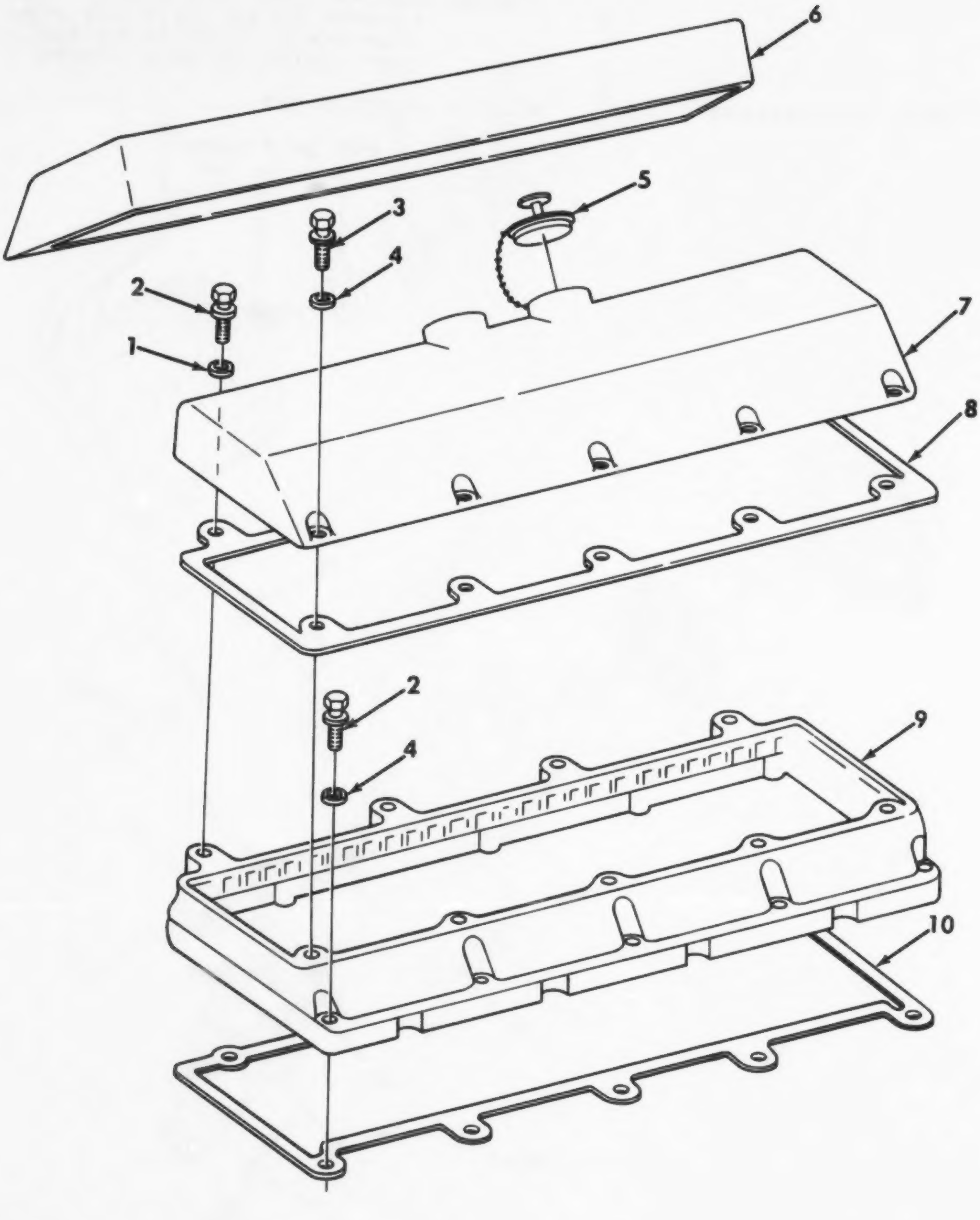

Figure 101. Cylinder Head Covers.

(1) ITEM NO	(2) SMR CODE	(3) CAGEC	(4) PART NUMBER	(5) DESCRIPTION AND USABLE ON CODES(UOC)	(6) QTY
				GROUP AU: POWERTRAIN INSTALLATION FIG.101 CYLINDER HEAD COVERS	
1	PAOZZ	96906	MS27183-14	WASHER,FLAT..........................	4
2	PAOZZ	15434	3012473	SCREW................................	9
3	PAOZZ	15434	3014766	CAPSCREW AND WASHER..................	10
4	PAOZZ	15434	63842	WASHER,FLAT..........................	10
5	PAOZZ	15434	3005150	CAP,FILLER OPENING...................	1
6	PAOZZ	15434	214939	COVER,ENGINE POPPET PLAIN..........	1
7	PAOZZ	15434	214203	COVER,ENGINE POPPET WITH OIL FILL..	1
8	PAOZZ	15434	3028673	GASKET PART OF KIT P/N 3013497 PART OF KIT P/N 3801539..................	2
9	PAOZZ	15434	3012950	HOUSING,MECHANICAL...................	2
10	PAOZZ	15434	3026315	GASKET PART OF KIT P/N 3013497 PART OF KIT P/N 3801539..................	2

END OF FIGURE

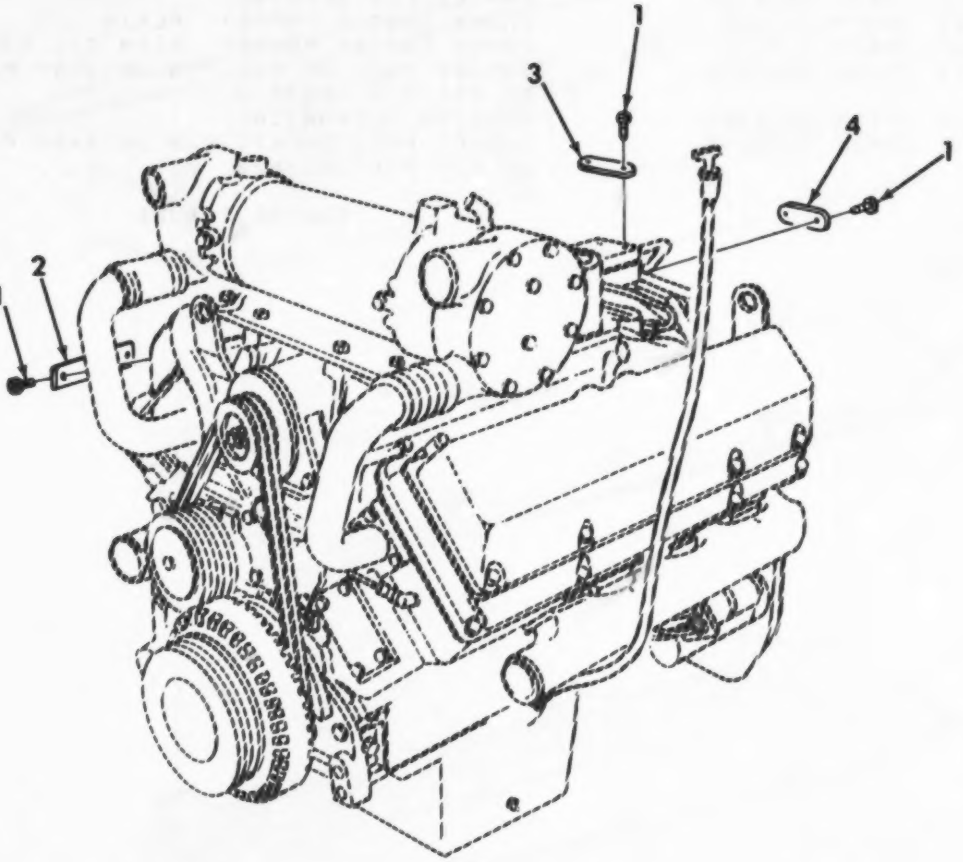

Figure 102. Engine Data Plates.

(1) ITEM NO	(2) SMR CODE	(3) CAGEC	(4) PART NUMBER	(5) DESCRIPTION AND USABLE ON CODES(UOC)	(6) QTY
				GROUP AU: POWERTRAIN INSTALLATION FIG.102 ENGINE DATA PLATES	
1	PAOZZ	15434	S2286	SCREW................................	8
2	PFOZZ	15434	3027295	PLATE,IDENTIFICATIO LEGEND.........	1
3	PFOZZ	15434	105375	PLATE,IDENTIFICATIO FUEL PUMP SERIAL NUMBER......................	1
4	PFOZZ	15434	136403	PLATE,MARKING,BLANK.................	1

END OF FIGURE

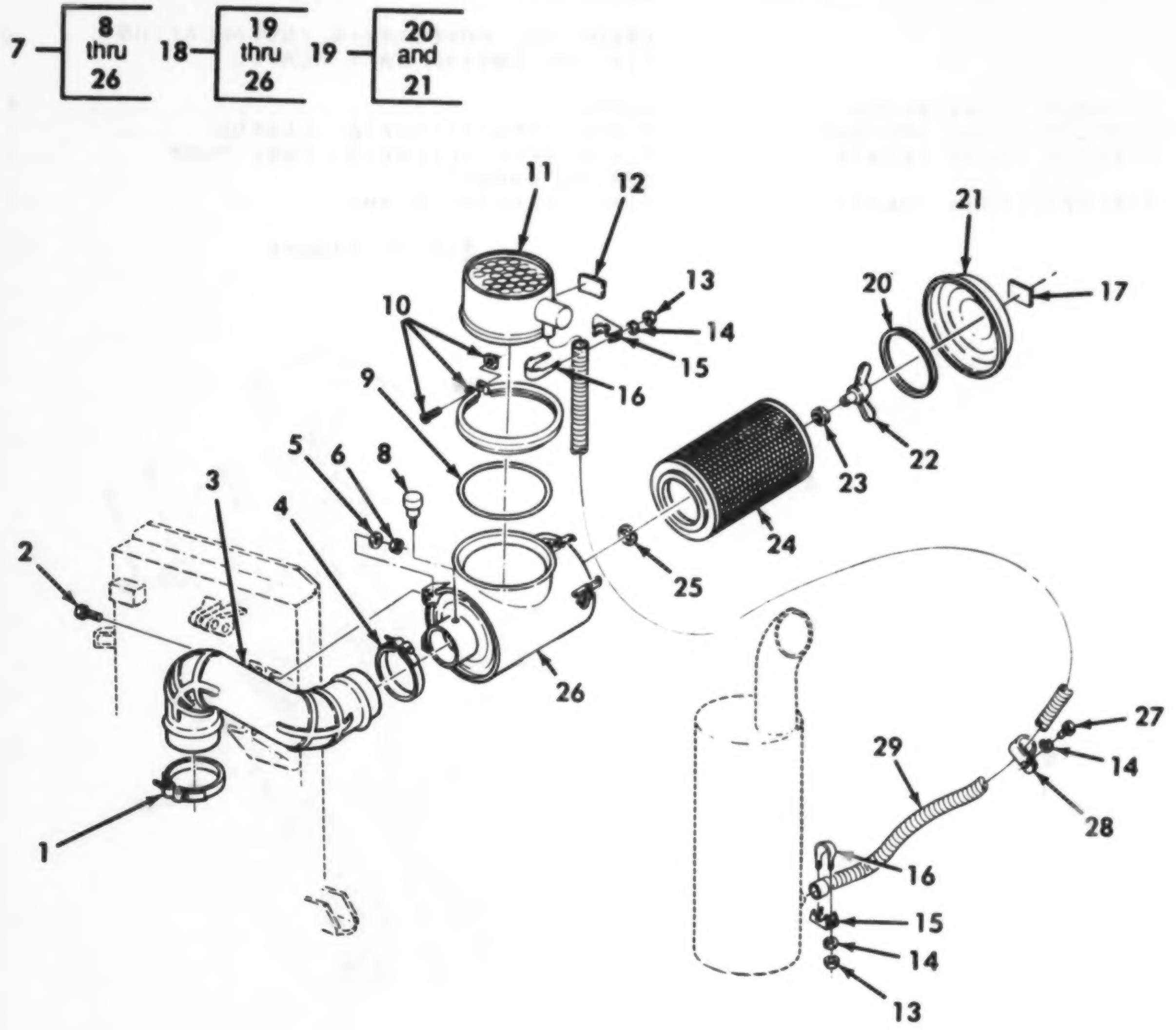

Figure 103. Air Cleaner, Hose, and Related Parts.

(1) ITEM NO	(2) SMR CODE	(3) CAGEC	(4) PART NUMBER	(5) DESCRIPTION AND USABLE ON CODES(UOC)	(6) QTY
				GROUP AU: POWERTRAIN INSTALLATION FIG. 103 AIR CLEANER, HOSE, AND RELATED PARTS	
1	PAOZZ	96906	MS21920-50	CLAMP,HOSE..........................	1
2	PAOZZ	96906	MS90728-85L	BOLT,SELF-LOCKING...................	4
3	PAOZZ	74687	8250	HOSE,METALLIC.......................	1
4	PAOZZ	96906	MS21920-53	CLAMP,HOSE..........................	1
5	PAOZZ	96906	MS27183-16	WASHER,FLAT.........................	4
6	PAOZZ	96906	MS51967-11	NUT,PLAIN,HEXAGON...................	4
7	PBOOO	18265	STB14-0138	FILTER,AIR,ENGINE...................	1
8	PAOZZ	60342	RBX00-2251	.INDICATOR,FILTER WA................	1
9	PAOZZ	18265	P01-7804	.GASKET.............................	1
10	PAOZZ	18265	P12-7009	.CLAMP,LOOP.........................	1
11	PBOZZ	18265	PSH00-1638	.BODY ASSY,AIR CLEAN................	1
12	PFOZZ	18265	P15-4778	.PLATE,IDENTIFICATIO................	1
13	PAOZZ	96906	MS35650-302	.NUT,PLAIN,HEXAGON..................	4
14	PAOZZ	96906	MS35338-43	.WASHER,LOCK........................	5
15	PAOZZ	19207	12332148	.CLAMP,LOOP.........................	2
16	PAOZZ	19207	12332149	.BOLT,U.............................	2
17	PAOZZ	19207	12296626	.DECAL..............................	1
18	XAOOO	18265	EGB14-0162	.CLEANER ASSY.......................	1
19	PBOZZ	18265	P10-9084	..COVER ASSEMBLY....................	1
20	PAOZZ	18265	P01-6972	...PACKING,PREFORMED................	1
21	XAOZZ	18265	P10-9445	...COVER............................	1
22	PAOZZ	18265	P10-9062	..NUT,PLAIN,WING....................	1
23	PAOZZ	18265	P10-5740	..GASKET............................	1
24	PAOZZ	18265	P15-2241	..FILTER ELEMENT,INTA...............	1
25	PAOZZ	18265	P10-5738	..CLIP..............................	1
26	XAOZZ	18265	P15-4779	..BODY..............................	1
27	PAOZZ	96906	MS51850-64	SCREW,TAPPING,THREA.................	1
28	PAOZZ	96906	MS21333-16	CLAMP,LOOP..........................	1
29	MOOZZ	19207	12332526	HOSE,MFLR TO AIR/CL MAKE FROM METALLIC HOSE,P/N WW-H-1053.........	1

END OF FIGURE

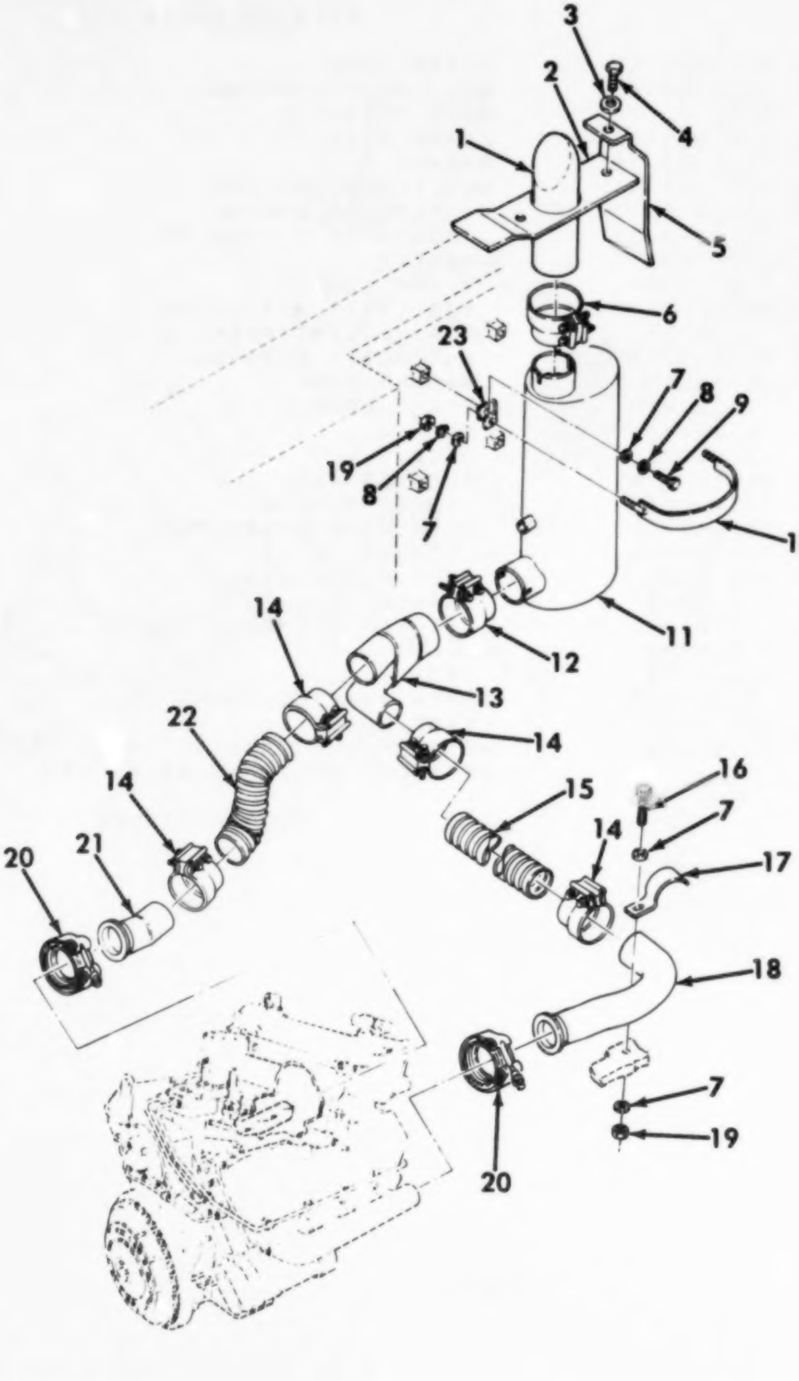

Figure 104. Muffler and Related Parts.

(1) ITEM NO	(2) SMR CODE	(3) CAGEC	(4) PART NUMBER	(5) DESCRIPTION AND USABLE ON CODES(UOC)	(6) QTY
				GROUP AU: POWERTRAIN INSTALLATION FIG.104 MUFFLER AND RELATED PARTS	
1	PAOZZ	19207	12325743	TUBE,BENT,METALLIC..................	1
2	PAOZZ	19207	12357357	SHIELD,MUFFLER.....................	1
3	PAOZZ	96906	MS27183-12	WASHER,FLAT........................	3
4	PAOZZ	96906	MS90728-32L	BOLT,SELF-LOCKING..................	3
5	PAOZZ	19207	12357359	SHIELD,MUFFLER,VEHI................	1
6	PAOZZ	61393	1431-50A	CLAMP,LOOP.........................	1
7	PAOZZ	96906	MS27183-14	WASHER,FLAT........................	10
8	PAOZZ	96906	MS35338-46	WASHER,LOCK........................	8
9	PAOZZ	96906	MS18154-60	SCREW,CAP,HEXAGON H................	4
10	PAOZZ	19207	12332029	STRAP,RETAINING....................	2
11	PAOZZ	18265	MJM09-0514	MUFFLER,EXHAUST....................	1
12	PAOZZ	61393	1427-40A	CLAMP,HOSE.........................	1
13	PAOZZ	19207	12332264	COLLECTOR,EXHAUST..................	1
14	PAOZZ	61393	1419-30A	CLAMP,LOOP.........................	4
15	MOOZZ	19207	12352558-1	HOSE,METALLIC MAKE FROM METALLIC HOSE,P/N WW-H-1053..................	1
16	PAOZZ	96906	MS90728-63L	BOLT,SELF-LOCKING..................	1
17	PAOZZ	19207	12332269	STRAP,RETAINING....................	1
18	PAOZZ	19207	12332432	PIPE,EXHAUST.......................	1
19	PAOZZ	96906	MS51967-8	NUT,PLAIN,HEXAGON..................	5
20	PAOZZ	00671	4112-4-388	CLAMP,HOSE.........................	2
21	PAOZZ	19207	12335364	TUBE,BENT,METALLIC.................	1
22	MOOZZ	19207	12352558-2	HOSE,METALLIC MAKE FROM METALLIC HOSE,P/N WW-H-1053..................	1
23	PFOZZ	19207	12332047	BRACKET,MUFFLER....................	4

END OF FIGURE

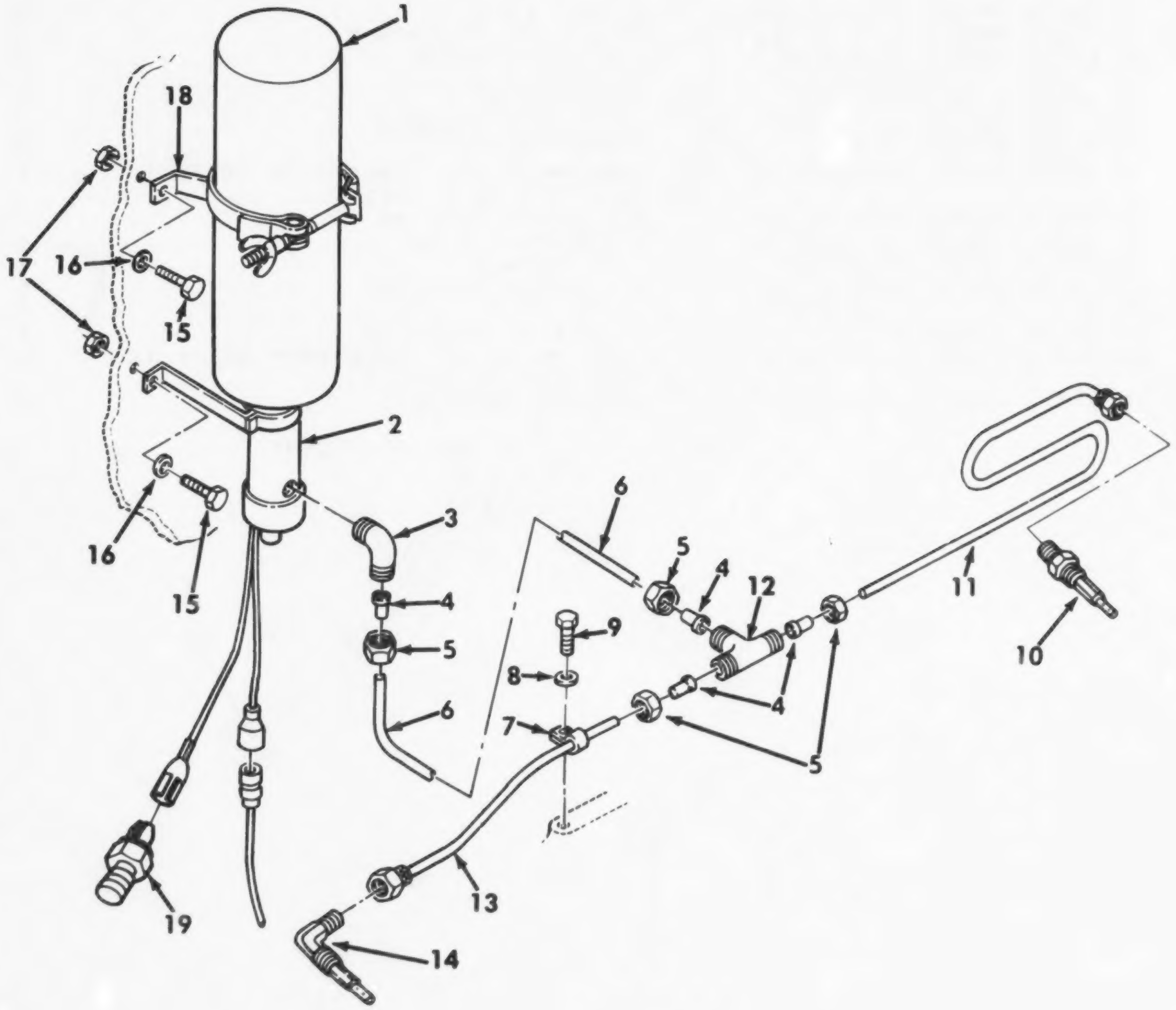

Figure 105. Engine Starting Aid.

(1) ITEM NO	(2) SMR CODE	(3) CAGEC	(4) PART NUMBER	(5) DESCRIPTION AND USABLE ON CODES(UOC)	(6) QTY
				GROUP AU: POWERTRAIN INSTALLATION FIG.105 ENGINE STARTING AID	
1	PAOZZ	53203	20000	CARTRIDGE,ENGINE ST..................	1
2	PAOZZ	61112	OS4-6PC	VALVE COLD START.....................	1
3	PAOZZ	96906	MS51815-1SS	ELBOW,PIPE TO TUBE...................	1
4	PAOZZ	96906	MS51825-1A	SLEEVE,CLINCH,TUBE...................	4
5	PAOZZ	96906	MS51823-1	NUT,TUBE COUPLING....................	4
6	PFOZZ	97403	13211E9554	TUBE,BENT,METALLIC...................	1
7	PAOZZ	96906	MS21333-117	CLAMP,LOOP...........................	1
8	PAOZZ	96906	MS9320-12	WASHER,FLAT..........................	1
9	PAOZZ	96906	MS18154-58	SCREW,CAP,HEXAGON H..................	1
10	PAOZZ	61112	OA2-STC	ATOMIZER,STARTING F..................	1
11	PFOZZ	97403	13211E9555	TUBE,METALLIC........................	1
12	PAOZZ	96906	MS51811-1	TEE,TUBE.............................	1
13	PFOZZ	97403	13211E9556	TUBE,BENT,METALLIC...................	1
14	PAOZZ	61112	OA4-5TC	SPRAY TIP,NOZZLE 90 DEGREE.........	1
15	PAOZZ	96906	MS90728-33L	BOLT,SELF-LOCKING....................	4
16	PAOZZ	96906	MS27183-12	WASHER,FLAT..........................	4
17	PAOZZ	96906	MS51967-5	NUT,PLAIN,HEXAGON....................	4
18	PBOZZ	61112	OS1189	CLAMP,LOOP...........................	1
19	PAOZZ	78280	OS1190-2	SWITCH,THERMOSTATIC..................	1

END OF FIGURE

3— 4 thru 15

7— 8 thru 15

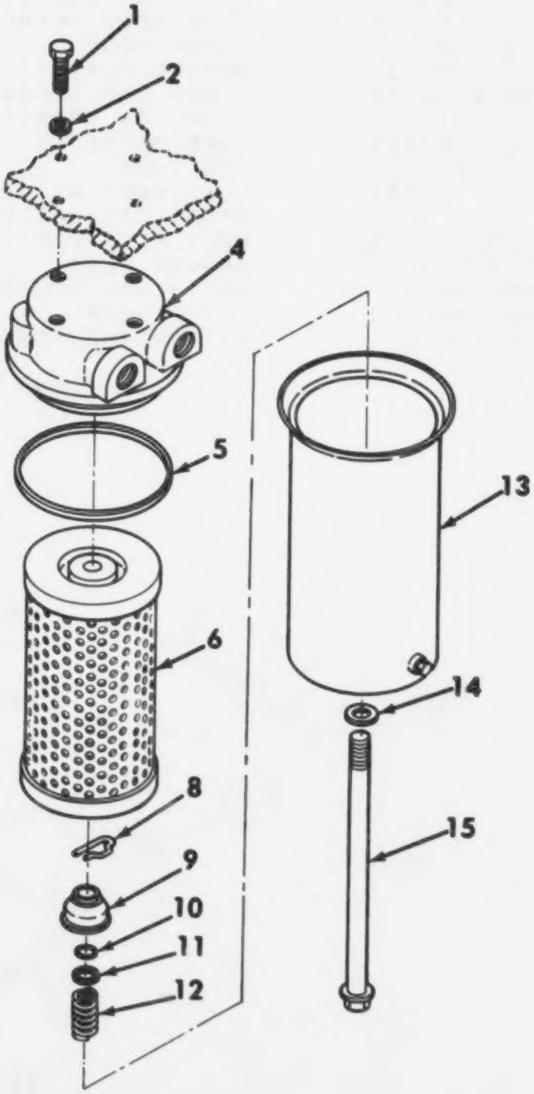

Figure 106. Engine Oil Filter.

(1) ITEM NO	(2) SMR CODE	(3) CAGEC	(4) PART NUMBER	(5) DESCRIPTION AND USABLE ON CODES(UOC)	(6) QTY
				GROUP AU: POWERTRAIN INSTALLATION FIG.106 ENGINE OIL FILTER	
1	PAOZZ	96906	MS90728-86L	BOLT,SELF-LOCKING..................	4
2	PAOZZ	96906	MS27183-16	WASHER,FLAT........................	4
3	PAOOO	15434	252916	FILTER,FLUID.......................	1
4	PFOZZ	15434	252917	.HEAD ASSEMBLY.....................	1
5	KFOZZ	15434	173368	.PACKING,PREFORMED PART OF KIT P/N 5705413...........................	1
6	KFOZZ	15434	158139	.FILTER ELEMENT,FLUI PART OF KIT P/N 5705413...........................	1
7	PFOZZ	15434	181592	.FILTER BODY,FLUID.................	1
8	PAOZZ	15434	3301956S	..PIN..............................	1
9	PFOZZ	15434	183342S	..ELEMENT SUPPORT,FIL..............	1
10	PAOZZ	33457	153518	..GASKET...........................	1
11	PAOZZ	33457	153520S	..WASHER,FLAT......................	1
12	XAOZZ	33457	173176	..SPRING...........................	1
13	XAOZZ	33457	3301179	..SHELL............................	1
14	PAOZZ	33457	8265S	..WASHER,FLAT......................	1
15	PFOZZ	15434	3301949S	..BOLT.............................	1

END OF FIGURE

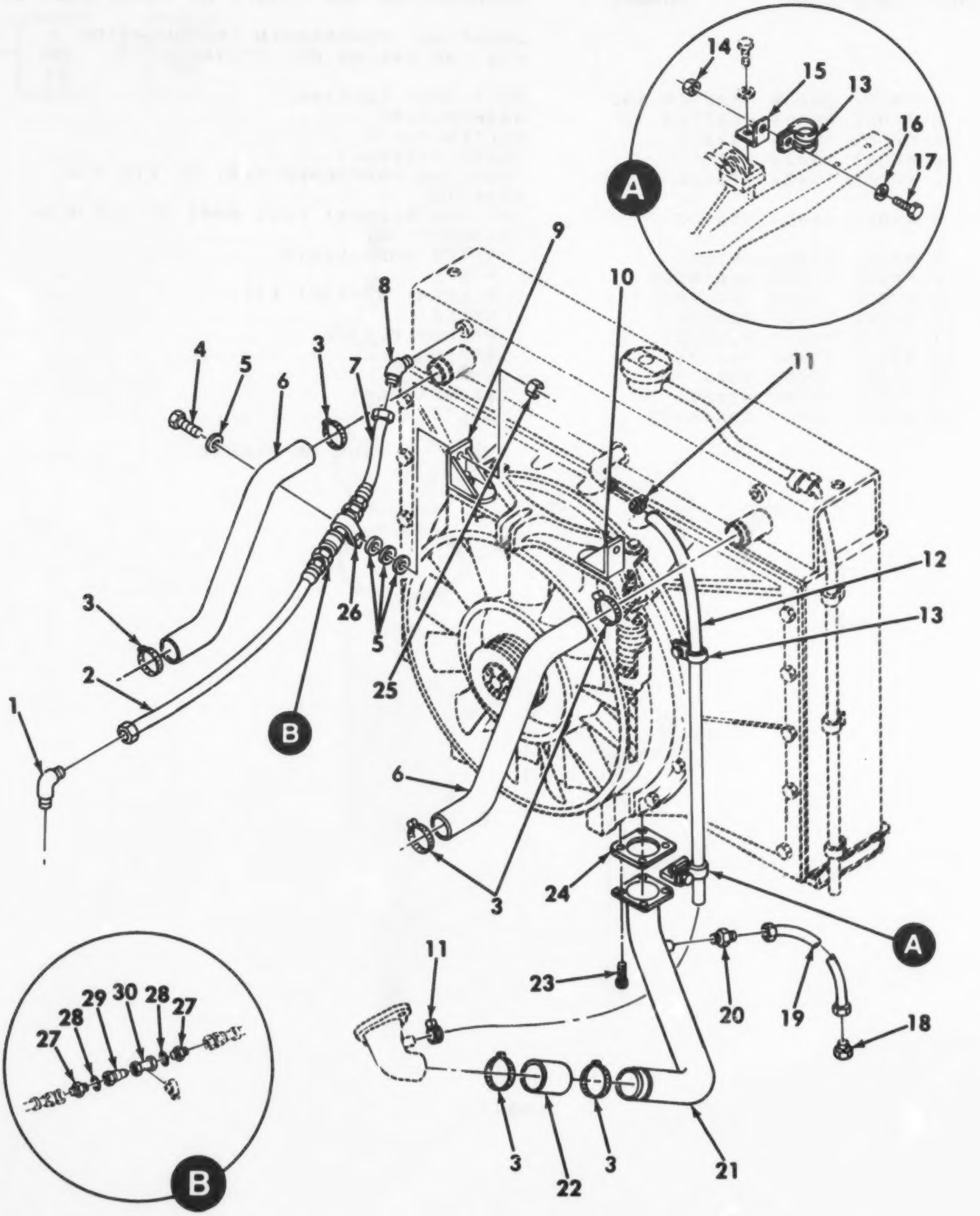

Figure 107. Power Package – Coolant Hoses and Clamps.

(1) ITEM NO	(2) SMR CODE	(3) CAGEC	(4) PART NUMBER	(5) DESCRIPTION AND USABLE ON CODES(UOC)	(6) QTY
				GROUP AU: POWERTRAIN INSTALLATION FIG.107 POWER PACKAGE- COOLANT HOSES AND CLAMPS	
1	PAOZZ	96906	MS51504A6	ELBOW,PIPE TO TUBE..................	2
2	PAOZZ	96906	MS35842-14	CLAMP,HOSE..........................	6
3	PAOZZ	19207	12357360-1	HOSE ASSEMBLY,NONME.................	2
4	PAOZZ	96906	MS90728-8	SCREW,CAP,HEXAGON H.................	2
5	PAOZZ	96906	MS27183-10	WASHER,FLAT.........................	8
6	PAOZZ	19207	12355302	HOSE,PREFORMED......................	2
7	PAOZZ	19207	12357360-2	HOSE ASSEMBLY,NONME.................	2
8	PAOZZ	96906	MS51508A6-6S	ELBOW,PIPE TO TUBE..................	2
9	PFOZZ	19207	12357363-1	BRACKET,ANGLE RIGHT SIDE............	1
10	PFOZZ	19207	12357363-2	BRACKET,ANGLE LEFT SIDE.............	1
11	PAOZZ	96906	MS35842-12	CLAMP,HOSE..........................	2
12	MOOZZ	81349	M62217/1-16-57	HOSE,NONMETALLIC MAKE FROM HOSE,P/N M62217/1-16BULK...................	1
13	PAOZZ	19207	7529133-7	CLAMP,LOOP..........................	2
14	PAOZZ	96906	MS51967-8	NUT,PLAIN,HEXAGON...................	1
15	PAOZZ	19207	12352680	BRACKET,ANGLE.......................	1
16	PAOZZ	96906	MS9320-12	WASHER,FLAT.........................	1
17	PAOZZ	96906	MS90728-58L	BOLT,SELF-LOCKING...................	1
18	PAOZZ	96906	MS51518B8	PLUG,TUBE FITTING,T.................	1
19	PAOZZ	96906	MS52103A081120R	HOSE ASSEMBLY,NONME.................	1
20	PAOZZ	96906	MS51500A8-4	ADAPTER,STRAIGHT,PI.................	1
21	PAOZZ	19207	12357418	TUBE ASSEMBLY,METAL.................	1
22	MOOZZ	81349	M62217/1-44-6	HOSE,NONMETALLIC MAKE FROM HOSE,P/N M62217/1-44........................	1
23	PAOZZ	96906	MS90728-60L	BOLT,SELF-LOCKING...................	4
24	PAOZZ	97403	13204E3530	GASKET..............................	1
25	PAOZZ	96906	MS51922-1	NUT,SELF-LOCKING,HE.................	2
26	PAOZZ	96906	MS21333-128	CLAMP,LOOP..........................	2
27	PAOZZ	96906	MS51525B6-8	ADAPTER,STRAIGHT,TU.................	4
28	PAOZZ	96906	MS28778-8	PACKING,PREFORMED...................	4
29	PAOZZ	97111	H3-63-T8	COUPLING HALF,QUICK.................	2
30	PAOZZ	97111	H3-62SL-T8	COUPLING HALF,QUICK.................	2

END OF FIGURE

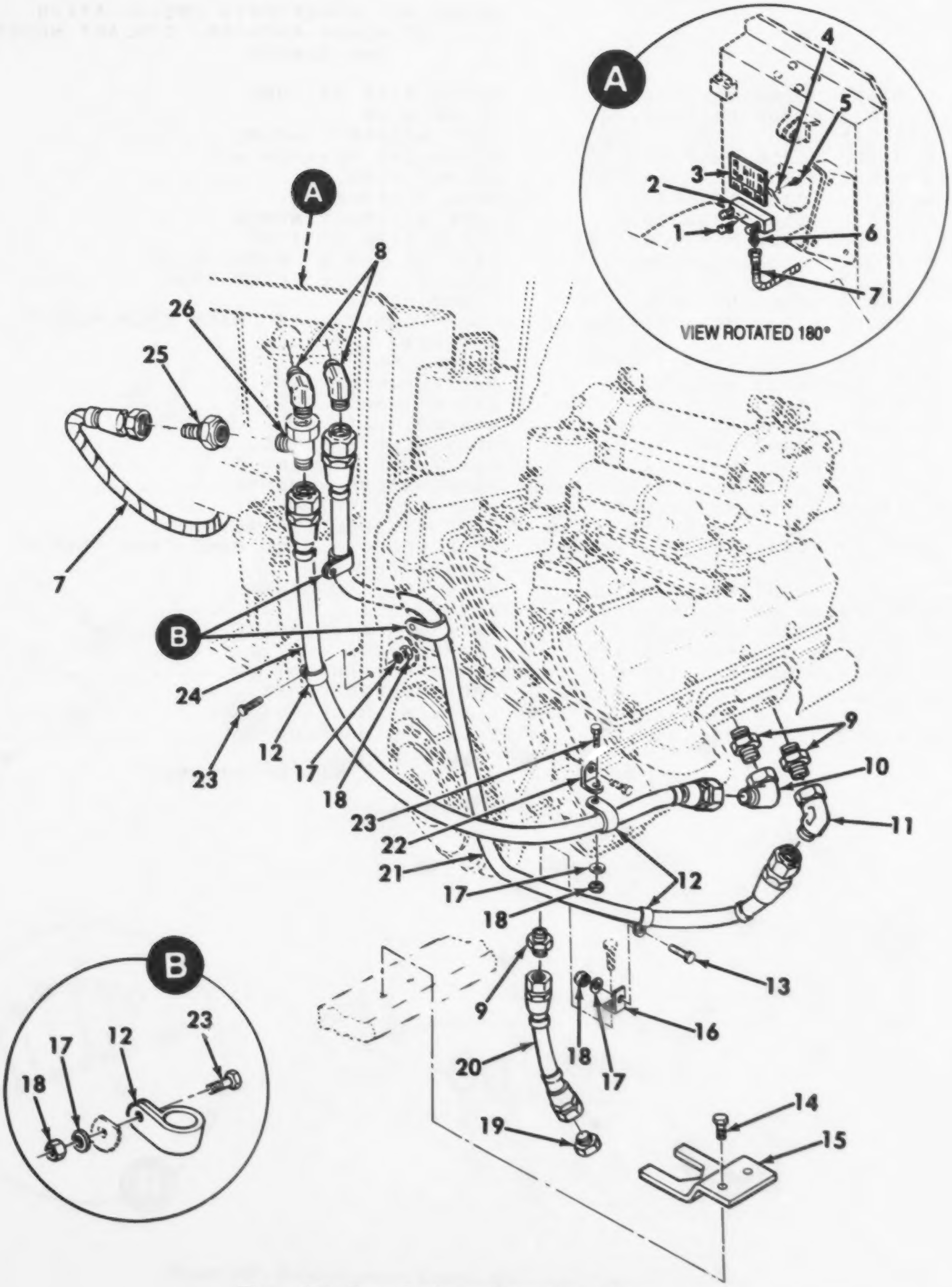

Figure 108. Power Package – External Oil Lines.

(1) ITEM NO	(2) SMR CODE	(3) CAGEC	(4) PART NUMBER	(5) DESCRIPTION AND USABLE ON CODES(UOC)	(6) QTY
				GROUP AU: POWERTRAIN INSTALLATION FIG.108 POWER PACKAGE- EXTERNAL OIL LINES	
1	PAOZZ	91816	P59-500	VALVE,BLEEDER,HYDRA.................	1
2	PFOZZ	19207	12355291	MANIFOLD OIL SAMPLING...............	1
3	PFOZZ	19207	12355292	PLATE,INSTRUCTION...................	1
4	PAOZZ	96906	MS27183-12	WASHER,FLAT.........................	2
5	PAOZZ	96906	MS90728-31L	BOLT,SELF-LOCKING...................	2
6	PAOZZ	96906	MS51500A6	ADAPTER,STRAIGHT,PI.................	1
7	PAOZZ	19207	12355287-1	HOSE ASSEMBLY,NONME.................	1
8	PAOZZ	96906	MS51504A16-12	ELBOW,PIPE TO TUBE..................	2
9	PAOZZ	96906	MS51500A16-12	ADAPTER,STRAIGHT,PI.................	3
10	PAOZZ	96906	MS51521A16	ELBOW,TUBE..........................	1
11	PAOZZ	96906	MS51522A16	ELBOW,TUBE..........................	1
12	PAOZZ	19207	7529133-9	CLAMP,LOOP..........................	5
13	PAOZZ	96906	MS90728-58L	BOLT,SELF-LOCKING...................	1
14	PAOZZ	96906	MS51095-358L	BOLT,SELF-LOCKING...................	2
15	PFOZZ	97403	13214E2852	BRACKET,DOUBLE ANGL.................	1
16	PAOZZ	19207	12352619	BRACKET,ANGLE.......................	1
17	PAOZZ	96906	MS9320-12	WASHER,FLAT.........................	5
18	PAOZZ	96906	MS51967-8	NUT,PLAIN,HEXAGON...................	5
19	PAOZZ	96906	MS51518B16	PLUG,TUBE FITTING,T.................	1
20	PAOZZ	19207	12357156	HOSE ASSEMBLY,NONME OIL PAN DRAIN TUBE................................	1
21	PAOZZ	19207	12352677-6	HOSE ASSEMBLY,NONME.................	1
22	PAOZZ	19207	12352680	BRACKET,ANGLE.......................	1
23	PAOZZ	96906	MS90728-60L	BOLT,SELF-LOCKING...................	4
24	PAOZZ	19207	12352677-5	HOSE ASSEMBLY,NONME.................	1
25	PAOZZ	19207	12355293-2	REDUCER,TUBE........................	1
26	PAOZZ	96906	MS51523A16	TEE,TUBE............................	1

END OF FIGURE

22— 23 thru 25

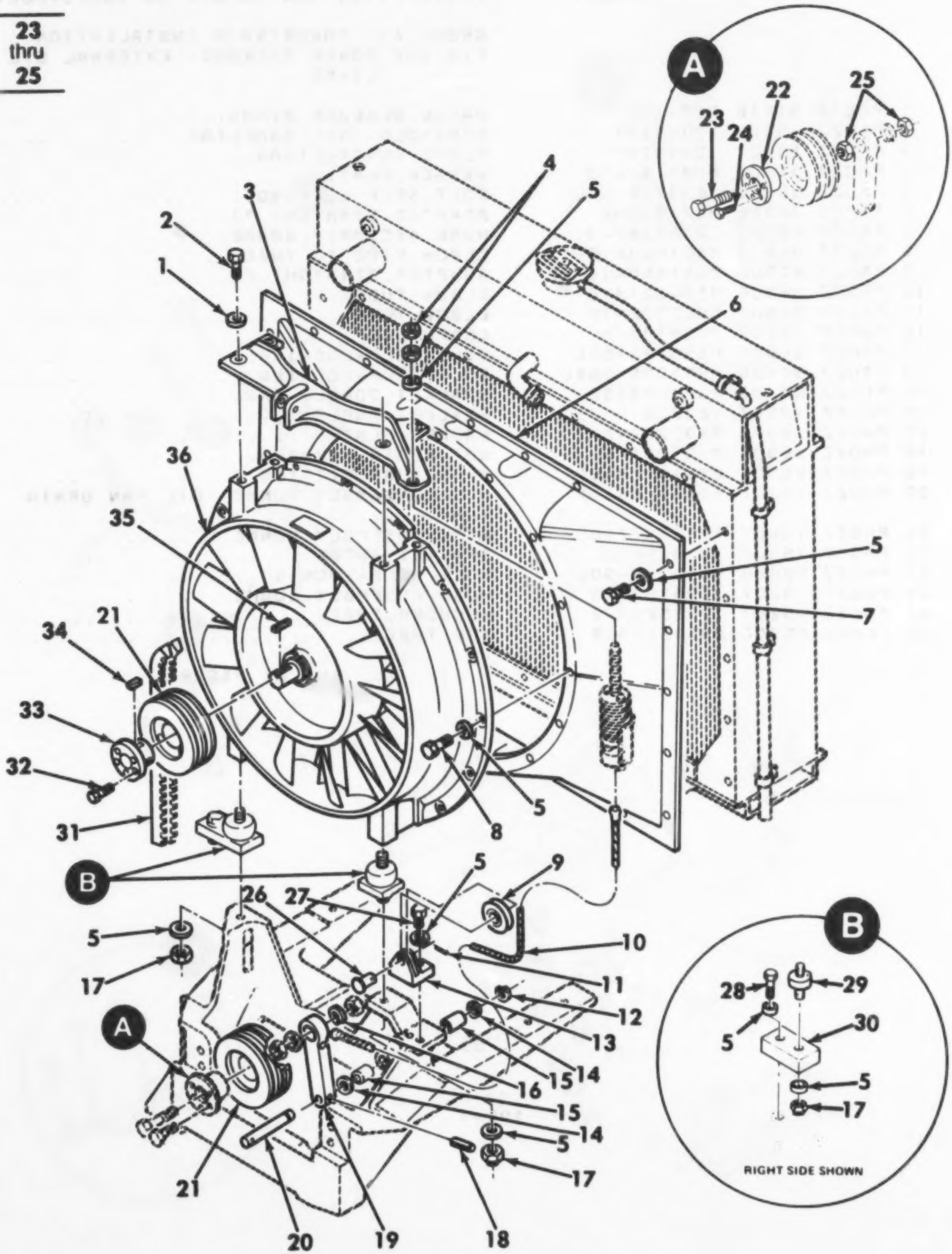

Figure 109. Fan and Related Parts.

(1) ITEM NO	(2) SMR CODE	(3) CAGEC	(4) PART NUMBER	(5) DESCRIPTION AND USABLE ON CODES(UOC)	(6) QTY
				GROUP AU: POWERTRAIN INSTALLATION FIG.109 FAN AND RELATED PARTS	
1	PAOZZ	96906	MS27183-18	WASHER,FLAT	4
2	PAOZZ	96906	MS90728-111L	BOLT,SELF-LOCKING	4
3	PAOZZ	19207	12332014	BRACKET,FAN	1
4	PAOZZ	96906	MS51968-8	NUT,PLAIN,HEXAGON	2
5	PAOZZ	96906	MS27183-14	WASHER,FLAT	47
6	PFOZZ	19207	12332022	SHROUD,FAN,RADIATOR	1
7	PAOZZ	96906	MS90728-59L	BOLT,SELF-LOCKING	24
8	PAOZZ	96906	MS90727-64L	BOLT,SELF-LOCKING	16
9	PAOZZ	19207	12332002	PULLEY,GROOVE	1
10	PAOZZ	19207	12332000	WIRE ROPE ASSEMBLY	1
11	PAOZZ	96906	MS24665-283	PIN,COTTER	1
12	PAOZZ	96906	MS16624-1075	RING,RETAINING	1
13	PAOZZ	19207	12331989	BRACKET	1
14	PAOZZ	88044	AN960XC1216L	WASHER,FLAT	V
15	PFOZZ	26124	12DU16	BEARING,SLEEVE	2
16	PAOZZ	96906	MS35338-50	WASHER,LOCK	1
17	PAOZZ	96906	MS16228-6C	NUT,SELF-LOCKING,HE	2
18	PAOZZ	96906	MS16562-52	PIN,SPRING	1
19	PAOZZ	19207	12335453	LEVER,REMOTE CONTRO	1
20	PAOZZ	19207	12335452	PIN,STRAIGHT,HEADLE	1
21	PAOZZ	71176	2C56P	IDLER BUSHING,PULLE	2
22	PAOZZ	71176	IDP1-5-8	IDLER BUSHING,PULLE	1
23	PAOZZ	96906	MS90728-169	.SCREW,CAP,HEXAGON H	1
24	PAOZZ	96906	MS90725-34	.SCREW,CAP,HEXAGON H	3
25	PAOZZ	96906	MS35691-49	.NUT,PLAIN,HEXAGON	2
26	PAOZZ	96906	MS20392-7C35	PIN,STRAIGHT,HEADED	1
27	PAOZZ	96906	MS90728-60L	BOLT,SELF-LOCKING	2
28	PAOZZ	96906	MS90727-63	SCREW,CAP,HEXAGON H	2
29	PAOZZ	76005	J-11729-127	MOUNT,RESILIENT	2
30	PFOZZ	19207	12357241	ADAPTER,POWER PACK	2
31	PAOZZ	24161	81780016	BELT,V	1
32	PAOZZ	96906	MS90728-34	BOLT,MACHINE	3
33	PAOZZ	71176	P1-1 1/4	BUSHING,TAPERED	1
34	PAOZZ	96906	MS20066-348	KEY,MACHINE	1
35	PAOZZ	96906	MS20066-211	KEY,MACHINE	1
36	PAOFF	58163	40430-1	FAN,VANEAXIAL	1

END OF FIGURE

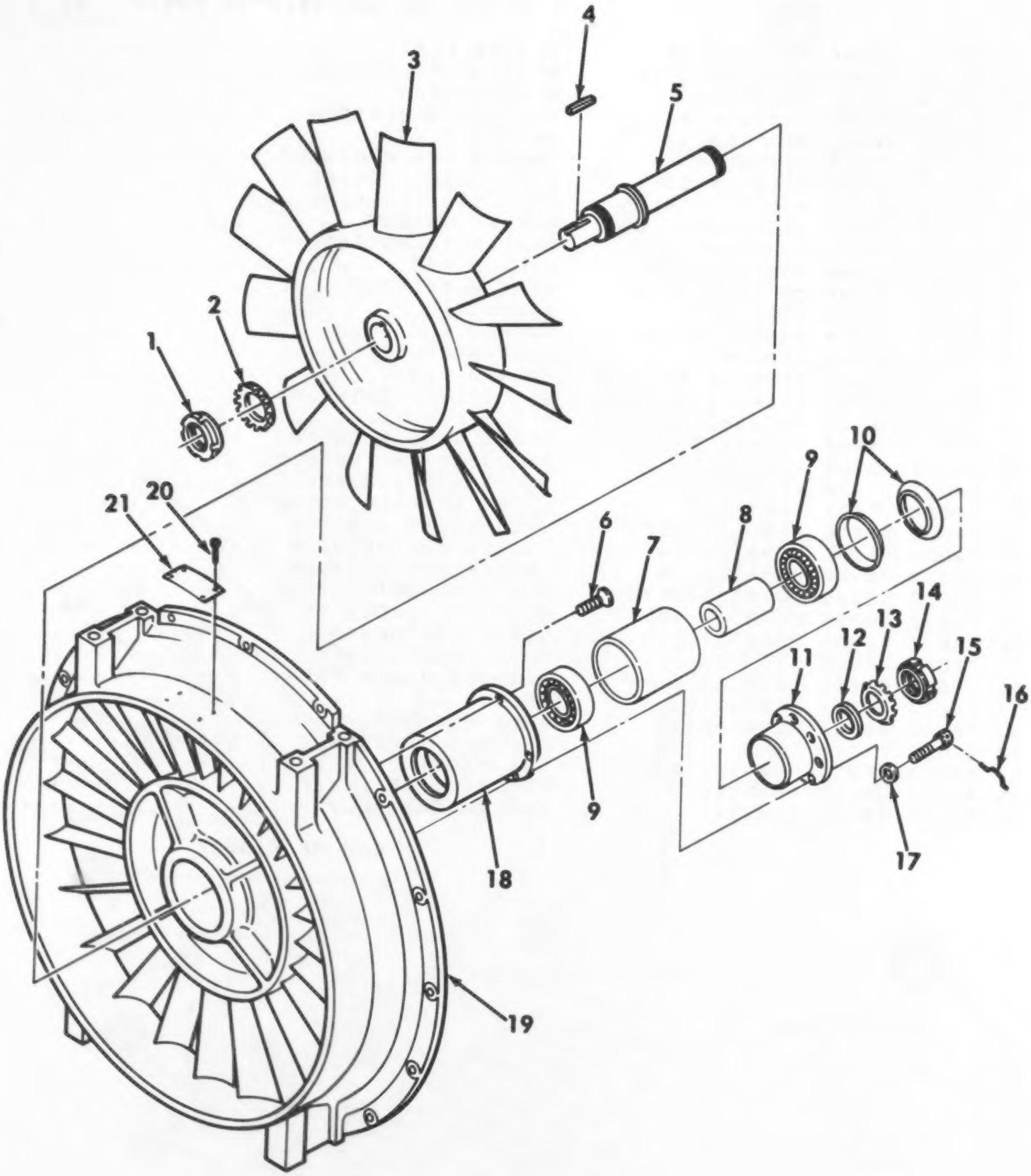

Figure 110. Fan Assembly.

(1) ITEM NO	(2) SMR CODE	(3) CAGEC	(4) PART NUMBER	(5) DESCRIPTION AND USABLE ON CODES(UOC)	(6) QTY
				GROUP AU: POWERTRAIN INSTALLATION FIG.110 FAN ASSEMBLY	
1	PAFZZ	96906	MS19068-092	.NUT,PLAIN,ROUND....................	1
2	PAFZZ	96906	MS19070-092	.WASHER,KEY.........................	1
3	PAFZZ	58163	40102-1	.IMPELLER,FAN,AXIAL.................	1
4	PAFZZ	96906	MS20066-280	.KEY,MACHINE........................	1
5	PAFZZ	58163	40103-1	.SHAFT,SHOULDERED...................	1
6	PAFZZ	96906	MS35190-272	.SCREW,MACHINE......................	4
7	PAFZZ	58163	40327-1	.SPACER,SLEEVE......................	1
8	PAFZZ	58163	723071-4	.SPACER,SLEEVE......................	1
9	PAFZZ	03497	3300A54A0053-001	.BEARING,BALL,ANNULA................	2
10	PAFZZ	05341	BS308	.WASHER SET,SPRING T................	2
11	PAFZZ	58163	40314-1	.CAP,PILLOW BLOCK...................	1
12	PAFZZ	58163	723071-2	.BEARING,SLEEVE.....................	1
13	PAFZZ	96906	MS19070-082	.WASHER,KEY.........................	1
14	PAFZZ	96906	MS19068-082	.NUT,PLAIN,ROUND....................	1
15	PAFZZ	80205	NAS1351-3H-10P	.SCREW,CAP,SOCKET HE................	4
16	MFFZZ	00624	900010-32CAR	.WIRE,NONELECTRICAL MAKE FROM NONELECTRICAL WIRE,P/N 900010-32C...	1
17	PAFZZ	88044	AN960-10	.WASHER,FLAT........................	4
18	PAFZZ	58163	40112-1	.HOUSING,MECHANICAL.................	1
19	PAFZZ	58163	40099-1	.HOUSING,MECHANICAL.................	1
20	PFFZZ	96906	MS21318-2	.SCREW,DRIVE........................	4
21	PFFZZ	58163	40128-1	.PLATE,IDENTIFICATIO................	1

END OF FIGURE

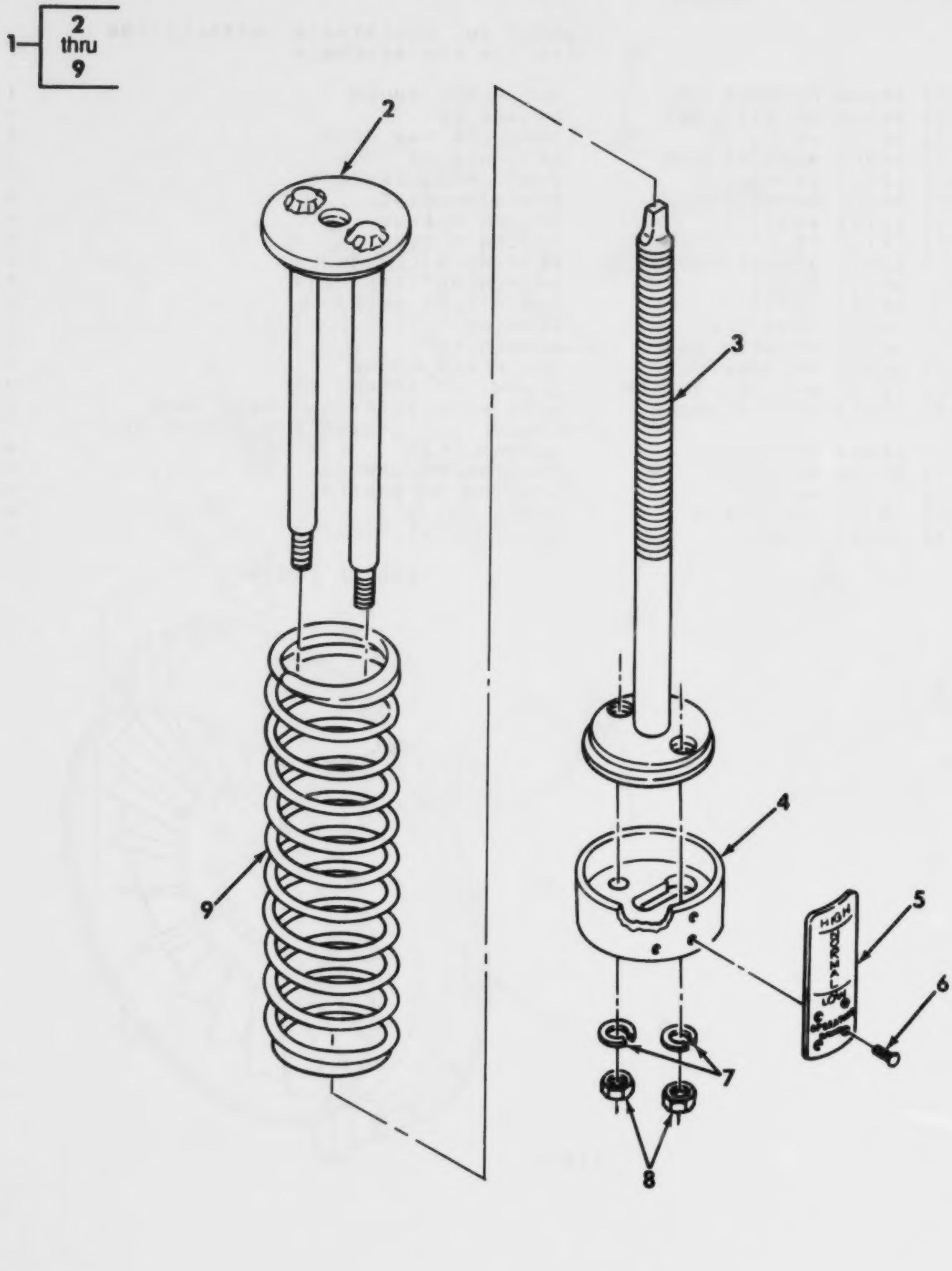

Figure 111. Fan Tensioner Assembly.

(1) ITEM NO	(2) SMR CODE	(3) CAGEC	(4) PART NUMBER	(5) DESCRIPTION AND USABLE ON CODES(UOC)	(6) QTY
				GROUP AU: POWERTRAIN INSTALLATION FIG.111 FAN TENSIONER ASSEMBLY	
1	PAOOO	19207	12331990	TENSIONER ASSY,FAN..................	1
2	XAOZZ	19207	12331995	.RETAINER...........................	1
3	XAOZZ	19207	12331992	.RETAINER...........................	1
4	XAOZZ	19207	12331991	.PLATE..............................	1
5	PFOZZ	19207	12331999	.PLATE,INSTRUCTION..................	1
6	PAOZZ	96906	MS21318-14	.SCREW,DRIVE........................	4
7	PAOZZ	02614	N405P41B6	.WASHER,LOCK........................	2
8	PAOZZ	96906	MS51968-2	.NUT,PLAIN,HEXAGON..................	2
9	PAOZZ	19207	12331998	.SPRING,HELICAL,COMP................	1

END OF FIGURE

best copy available

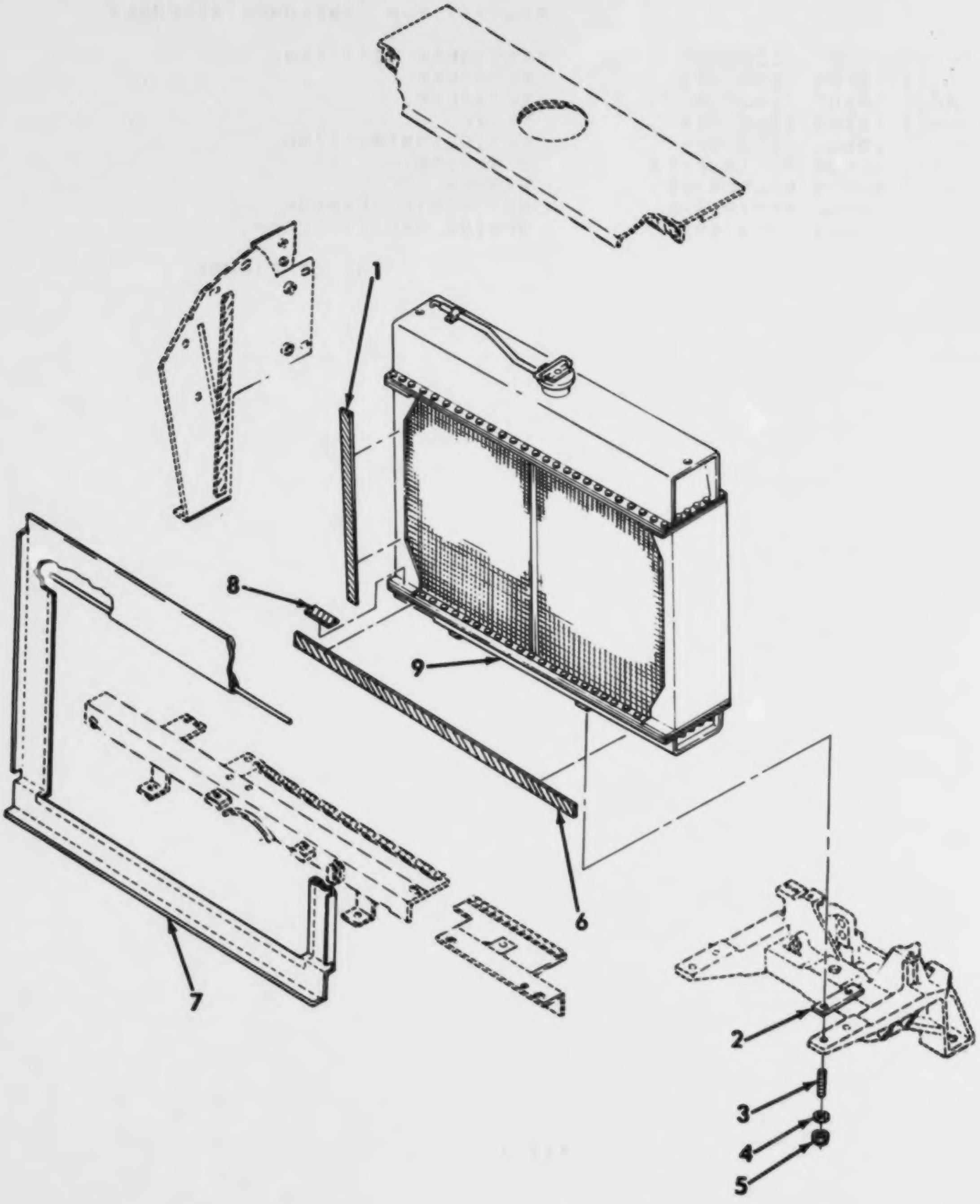

Figure 112. Radiator and Attaching Parts.

(1) ITEM NO	(2) SMR CODE	(3) CAGEC	(4) PART NUMBER	(5) DESCRIPTION AND USABLE ON CODES(UOC)	(6) QTY
				GROUP AU: POWERTRAIN INSTALLATION FIG.112 RADIATOR AND ATTACHING PARTS	
1	MOOZZ	19207	12355369-2	TAPE,HOOK MAKE FROM FASTENER HOOK TAPE,P/N M21840TYPE1A,CL1,1.50W, BLK3230..............................	V
2	PAOZZ	19207	12332021	PAD,CUSHIONING......................	2
3	PAOZZ	96906	MS51864-106-20	STUD,PLAIN..........................	4
4	PAOZZ	96906	MS27183-18	WASHER,FLAT.........................	4
5	PAOZZ	96906	MS17829-8F	NUT,SELF-LOCKING,HE.................	4
6	MOOZZ	19207	12355368-2	TAPE,HOOK MAKE FROM FASTENER HOOK TAPE,P/N M21840TYPE1A,CL1,1.00W, BLK3230..............................	V
7	PAOZZ	19207	12355383	SEAL ASSEMBLY,AIR...................	1
8	MOOZZ	19207	12355368-1	TAPE,HOOK MAKE FROM FASTENER HOOK TAPE,P/N M21840TYPE1A,CL1,1.00W, BLK3230..............................	V
9	PAOFF	67049	306661	RADIATOR,ENGINE COO.................	1

END OF FIGURE

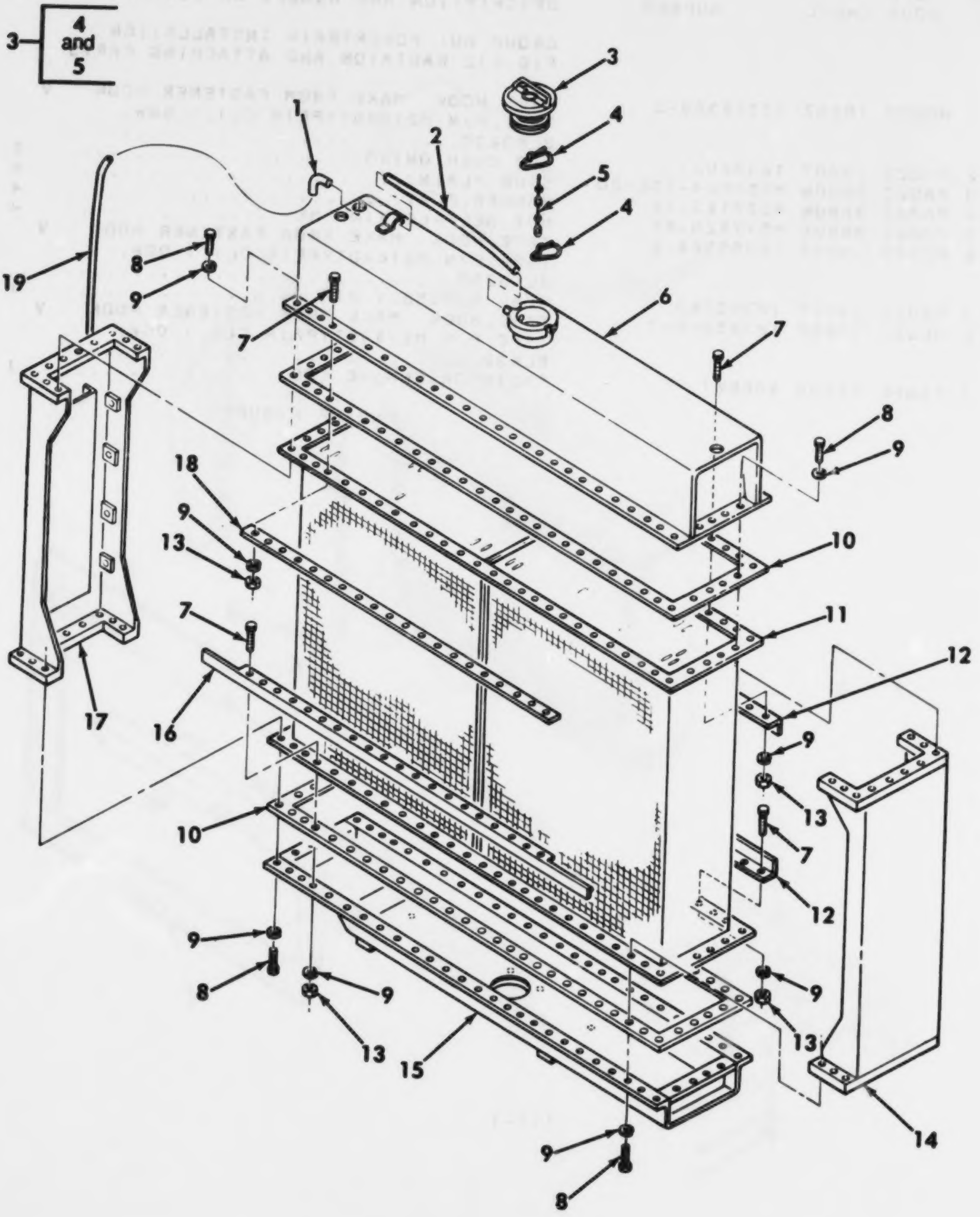

Figure 113. Radiator Assembly.

(1) ITEM NO	(2) SMR CODE	(3) CAGEC	(4) PART NUMBER	(5) DESCRIPTION AND USABLE ON CODES(UOC)	(6) QTY
				GROUP AU: POWERTRAIN INSTALLATION FIG.113 RADIATOR ASSEMBLY	
1	PBOZZ	67049	302391	.TUBE,BENT,METALLIC.................	1
2	MOOZZ	81349	M62217/1-8-19	.HOSE,OVERFLOW MAKE FROM HOSE,P/N M62217/18 BULK LG..................	1
3	PAOZZ	96906	MS51062-1	.CAP,FILLER OPENING.................	1
4	PAOZZ	96906	MS29523-1	..PIN,RETAINING.....................	2
5	MOOZZ	81348	MS51062-1 NOTE 3 6TRADE1	..CHAIN MAKE FROM CHAIN,P/N RRC271.	V
6	PFFZZ	67049	301318	.TANK,RADIATOR,TOP..................	1
7	PAFZZ	96906	MS90728-60	.SCREW,CAP,HEXAGON H................	80
8	PAFZZ	96906	MS90728-59	.SCREW,CAP,HEXAGON H................	40
9	PAFZZ	96906	MS35338-46	.WASHER,LOCK........................	120
10	PAFZZ	67049	301327	.GASKET.............................	2
11	PAFFF	67049	301338	.CORE,RADIATOR......................	1
12	PFFZZ	67049	301345	.BRACKET,ANGLE......................	2
13	PAFZZ	96906	MS51967-8	.NUT,PLAIN,HEXAGON..................	80
14	PFFZZ	67049	301334	.BRACKET ASSEMBLY,RA................	1
15	PFFFF	67049	301328	.TANK,BOTTOM,RADIATO................	1
16	PFFZZ	67049	306660	.BRACKET,ANGLE......................	1
17	PFFZZ	67049	301335	.SHROUD,FAN,RADIATOR................	1
18	PFFZZ	67049	301347	.BAR,HEADER,RADIATOR................	1
19	MOOZZ	81349	M62217/1-8-39	.HOSE MAKE FROM HOSE,P/N M62217/18 BULK LG.............................	1

END OF FIGURE

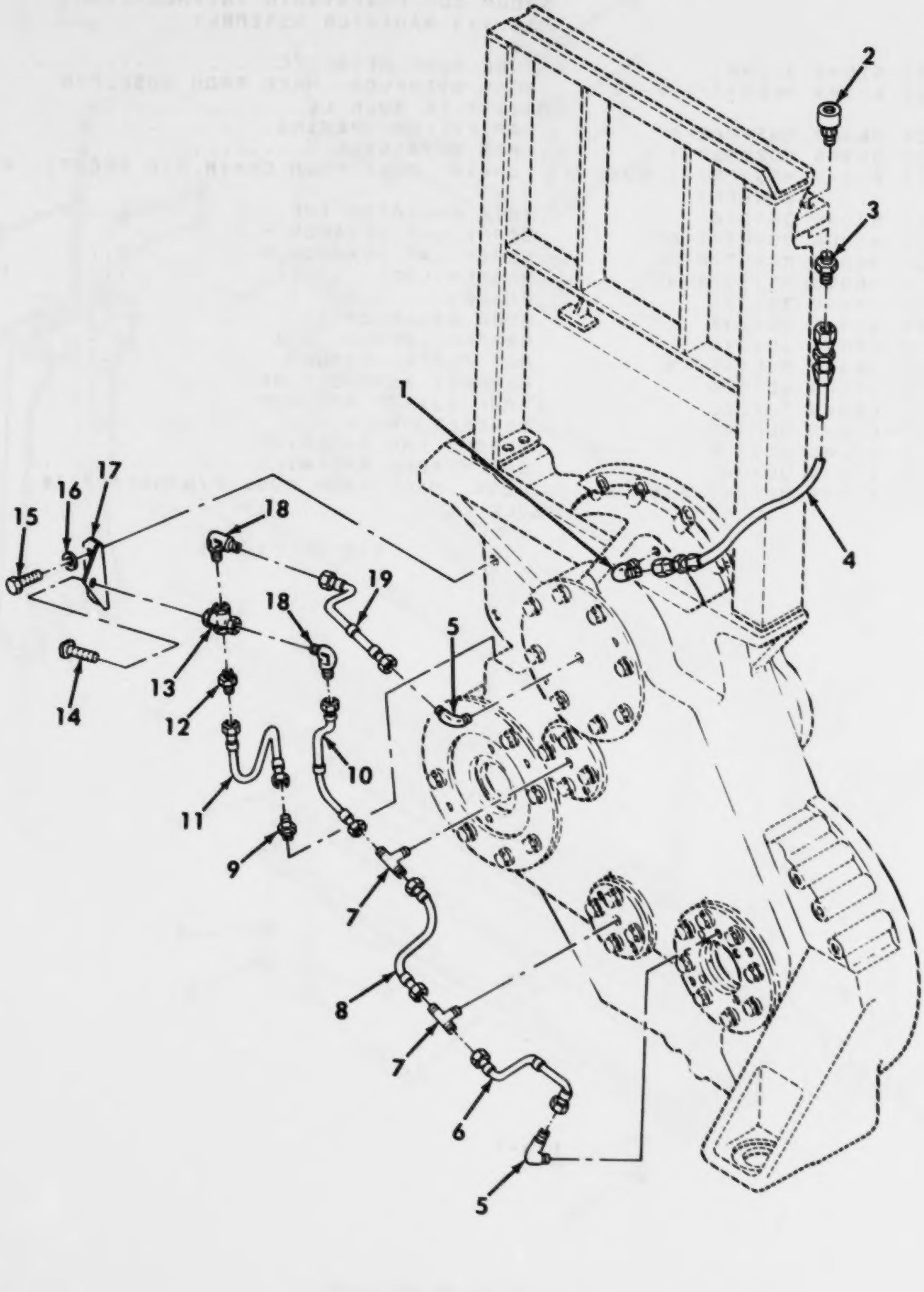

Figure 114. Transfer Case Oil Lines and Fittings.

(1) ITEM NO	(2) SMR CODE	(3) CAGEC	(4) PART NUMBER	(5) DESCRIPTION AND USABLE ON CODES(UOC)	(6) QTY
				GROUP AU: POWERTRAIN INSTALLATION FIG.114 TRANSFER CASE OIL LINES AND FITTINGS	
1	PAOZZ	96906	MS51504A6	ELBOW,PIPE TO TUBE..................	1
2	PAOZZ	90005	569020-01	BREATHER............................	1
3	PAOZZ	96906	MS51500A6	ADAPTER,STRAIGHT,PI.................	1
4	PAOZZ	19207	12357136-1	HOSE ASSEMBLY,NONME.................	1
5	PAOZZ	97403	13214E2839	ELBOW,PIPE TO TUBE..................	2
6	PFOZZ	97403	13211E8762	TUBE ASSEMBLY,METAL.................	1
7	PAOZZ	97403	13214E2838	TEE,TUBE............................	2
8	PFOZZ	97403	13211E8761	TUBE ASSEMBLY,METAL.................	1
9	PAOZZ	97403	13214E2081	RESTRICTOR,FLUID FL.................	1
10	PFOZZ	97403	13211E8765	TUBE ASSEMBLY,METAL.................	1
11	PFOZZ	97403	13211E8764	TUBE ASSEMBLY,METAL.................	1
12	PAOZZ	96906	MS51819-5	ADAPTER,STRAIGHT,PI.................	1
13	PAOZZ	97403	13214E2258	CROSS,PIPE..........................	1
14	PAOZZ	81348	WW-P-471BDOBCBA	BUSHING,PIPE........................	1
15	PAOZZ	96906	MS90728-86L	BOLT,SELF-LOCKING...................	2
16	PAOZZ	96906	MS27183-16	WASHER,FLAT.........................	2
17	PFOZZ	97403	13211E8769	BRACKET,ANGLE.......................	1
18	PAOZZ	96906	MS51815-5	ELBOW,PIPE TO TUBE..................	2
19	PFOZZ	97403	13214E2079	TUBE ASSEMBLY,METAL.................	1

END OF FIGURE

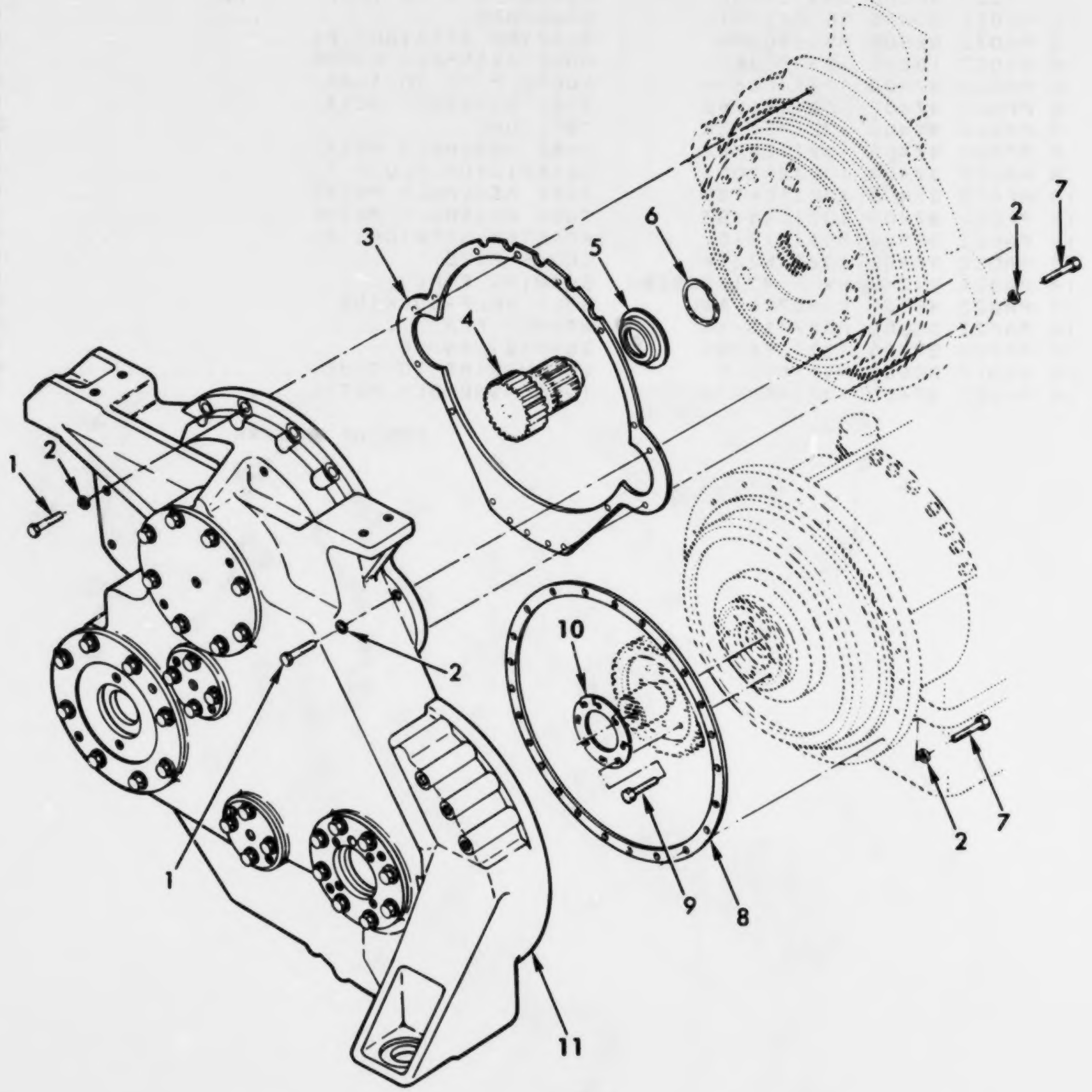

Figure 115. Transfer Case Installation.

(1) ITEM NO	(2) SMR CODE	(3) CAGEC	(4) PART NUMBER	(5) DESCRIPTION AND USABLE ON CODES(UOC)	(6) QTY
				GROUP AU: POWERTRAIN INSTALLATION FIG.115 TRANSFER CASE INSTALLATION	
1	PAFZZ	96906	MS90728-90L	BOLT,SELF-LOCKING....................	5
2	PAOZZ	96906	MS27183-16	WASHER,FLAT..........................	45
3	PAFZZ	97403	13204E3547	GASKET...............................	1
4	PAFZZ	97403	13214E2836	GEAR CLUSTER.........................	1
5	PBFZZ	97403	13214E2837	COUPLING STOP........................	1
6	PAFZZ	81349	M27426-1164A	RING,RETAINING.......................	1
7	PAFZZ	96906	MS90728-88L	BOLT,SELF-LOCKING....................	40
8	PAFZZ	97403	13214E2340	GASKET...............................	1
9	PAFZZ	96906	MS90728-110L	BOLT,SELF-LOCKING....................	10
10	PAFZZ	97403	13204E3548	PLATE,RETAINING,SHA..................	1
11	PAFDD	97403	13211E8750	TRANSFER TRANSMISSI..................	1

END OF FIGURE

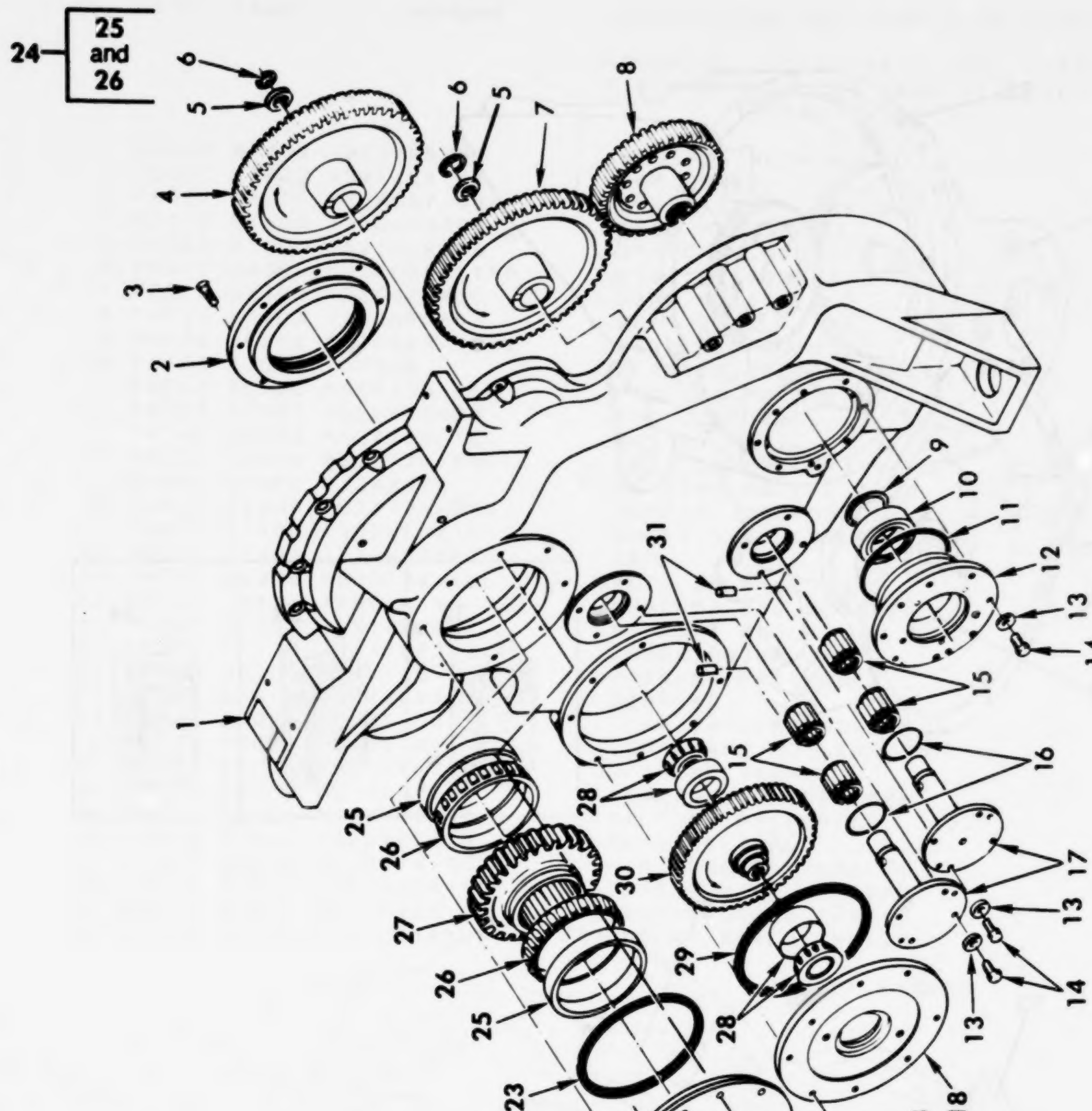

Figure 116. Transfer Case Assembly and Thread Inserts (Sheet 1 of 2).

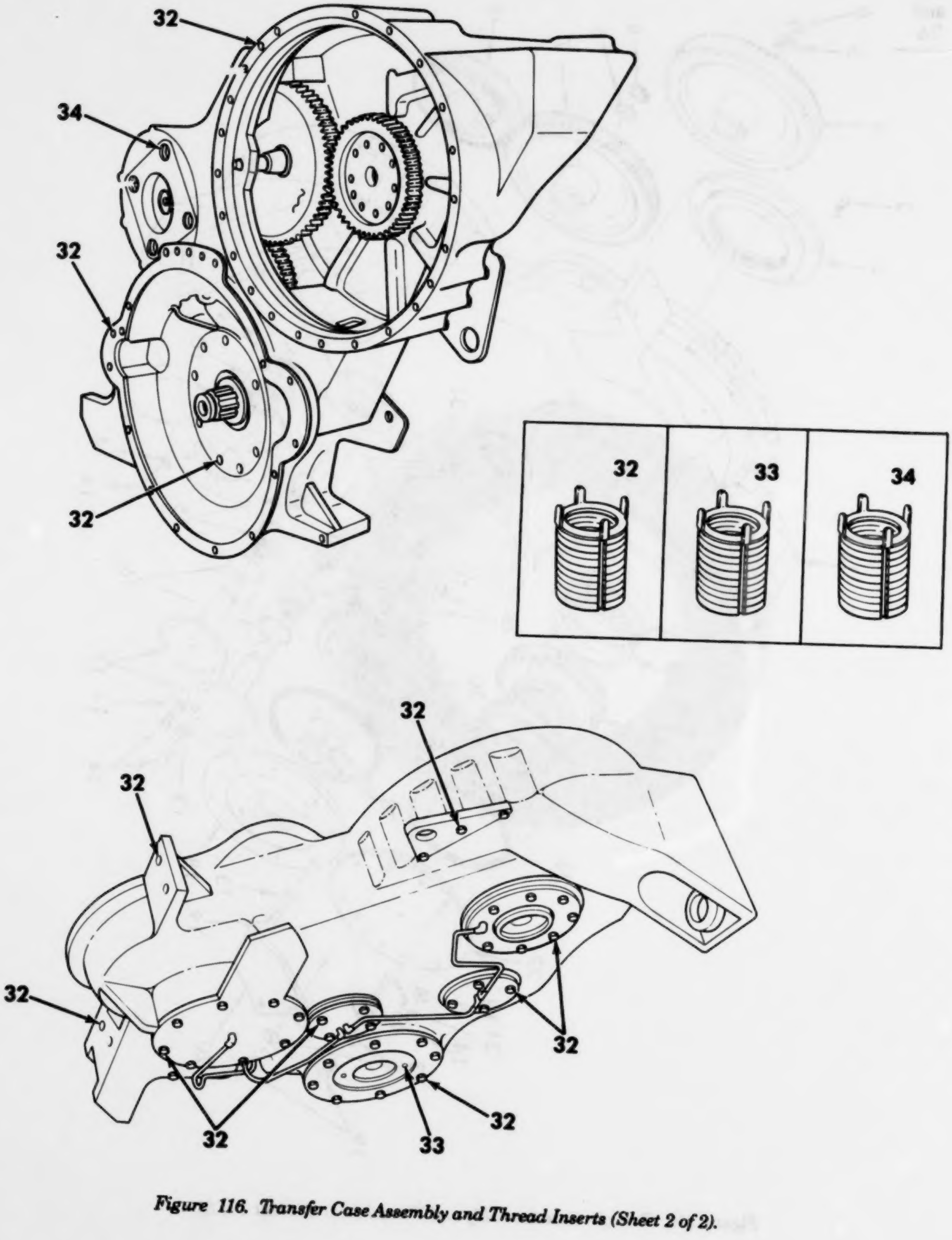

Figure 116. Transfer Case Assembly and Thread Inserts (Sheet 2 of 2).

(1) ITEM NO	(2) SMR CODE	(3) CAGEC	(4) PART NUMBER	(5) DESCRIPTION AND USABLE ON CODES(UOC)	(6) QTY
				GROUP AU: POWERTRAIN INSTALLATION FIG.116 TRANSFER CASE ASSEMBLY AND THREAD INSERTS	
1	PBDZZ	97403	13211E8751	.HOUSING,MECHANICAL	1
2	PBDZZ	97403	13211E8755	.CAP,INNER	1
3	PADZZ	96906	MS24667-63L	.SCREW,SELF-LOCKING	8
4	PADZZ	97403	13204E3408	.GEAR,HELICAL	1
5	PADZZ	97403	13214E2076	.SPACER,RING	2
6	PADZZ	96906	MS16626-1150	.RING,RETAINING	2
7	PADZZ	97403	13204E3410	.GEAR,HELICAL	1
8	PAFZZ	97403	13204E3407	.GEAR,SPUR	1
9	PAFZZ	96906	MS16625-1393	.RING,RETAINING	1
10	PAFZZ	43334	1309WB	.BEARING,ROLLER,CYLI	1
11	PAFZZ	96906	MS28775-258	.PACKING,PREFORMED	1
12	PBFZZ	97403	13204E3409	.CAP,OUTPUT	1
13	PAOZZ	96906	MS27183-16	.WASHER,FLAT	32
14	PAOZZ	96906	MS90728-86L	.BOLT,SELF-LOCKING	21
15	PAOZZ	60380	WJ243024	.BEARING,ROLLER,THRU	4
16	PADZZ	96906	MS28775-228	.PACKING,PREFORMED	2
17	PADZZ	97403	13204E3415	.SHAFT,SHOULDERED	2
18	PBDZZ	97403	13214E2783	.CAP	1
19	PAOZZ	96906	MS90728-88L	.BOLT,SELF-LOCKING	11
20	PFOZZ	19207	12352615	.BRACKET,EYE,ROTATIN	1
21	PFOZZ	97403	13214E2847	.BRACKET,ANGLE	1
22	PBDZZ	97403	13211E8754	.COVER,OUTER	1
23	PAOZZ	96906	MS28775-269	.PACKING,PREFORMED	1
24	ADDDD	97403	13211E8757	.BEARING	2
25	PADZZ	60038	LL225710	..CUP,TAPERED ROLLER	1
26	PADZZ	60038	LL225749	..CONE AND ROLLERS,TA	1
27	PADZZ	97403	13211E8756	.GEAR,HELICAL	1
28	PADZZ	96906	MS19081-67	.BEARING,ROLLER,TAPE	2
29	PADZZ	96906	MS28775-272	.PACKING,PREFORMED	1
30	PADZZ	97403	13204E3416	.GEAR,HELICAL	1
31	PFDZZ	96906	MS35674-30	.PIN,GROOVED,HEADLES	2
32	PAFZZ	96906	MS51830A109	.INSERT,SCREW THREAD	84
33	PAFZZ	96906	MS51830A110	.INSERT,SCREW THREAD	2
34	PAFZZ	96906	MS51831A109	.INSERT,SCREW THREAD	4

END OF FIGURE

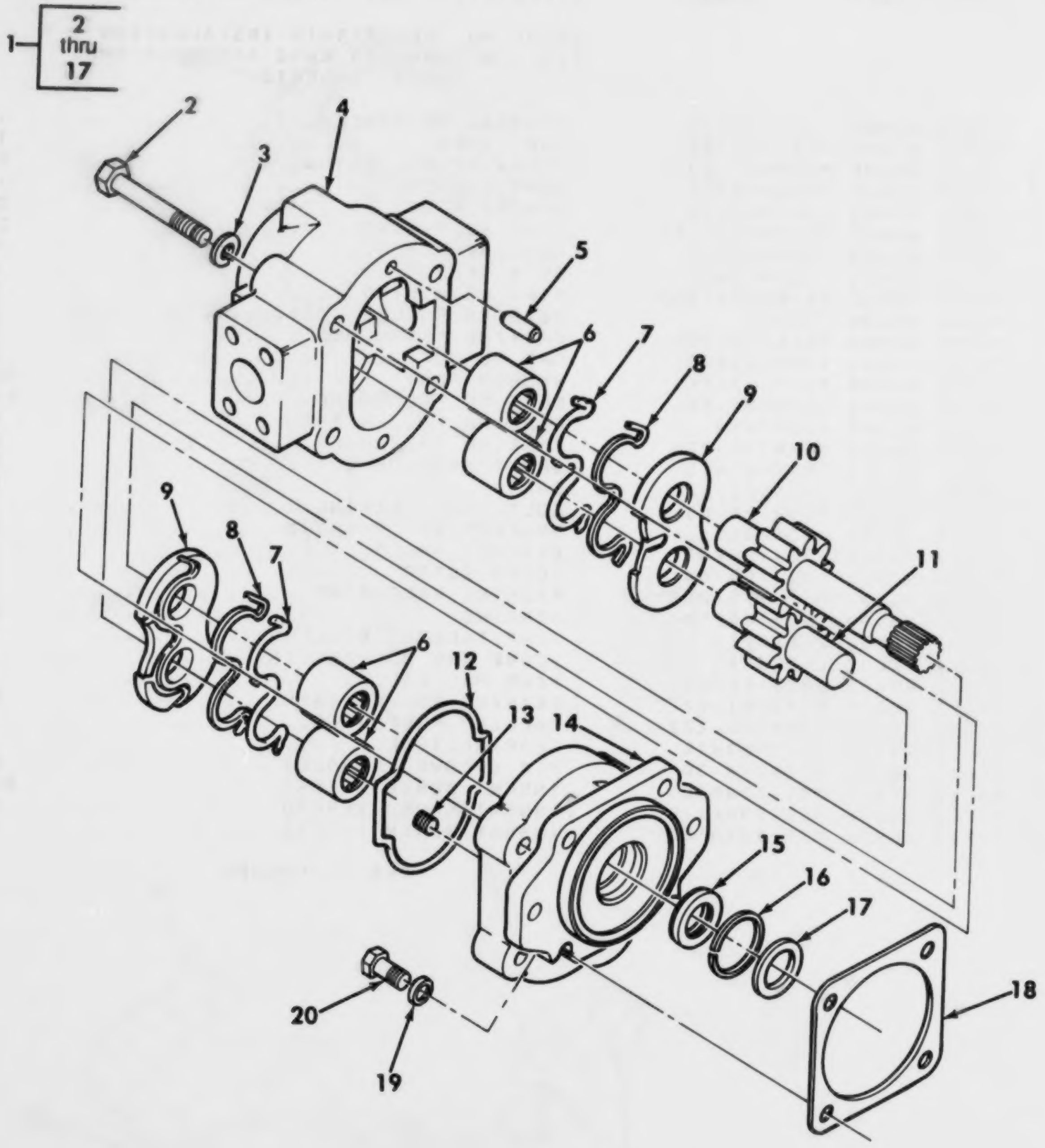

Figure 117. Scavenger Pump and Mounting Parts.

(1) ITEM NO	(2) SMR CODE	(3) CAGEC	(4) PART NUMBER	(5) DESCRIPTION AND USABLE ON CODES(UOC)	(6) QTY
				GROUP AU: POWERTRAIN INSTALLATION FIG. 117 SCAVENGER PUMP AND MOUNTING PARTS	
1	PAOFF	02892	1919A4B1L	PUMP, ROTARY	1
2	PAFZZ	02892	A116X13	.SCREW, CAP, HEXAGON H	4
3	PAFZZ	02892	A252X54	.WASHER, LOCK	4
4	XAFZZ	02892	3X1916X1	.HOUSING, MECHANICAL	1
5	PAFZZ	02892	A553X5	.PIN, TAPERED, PLAIN	2
6	PAFZZ	02892	A340X47	.BEARING, ROLLER, NEED	4
7	KFFZZ	02892	A991X38	.SEAL, RUBBER SPECIAL PART OF KIT P/N 5705423	2
8	KFFZZ	02892	A908X34	.SEAL PART OF KIT P/N 5705423	2
9	KFFZZ	02892	12X19X24	.PLATE PART OF KIT P/N 5705423	2
10	PAFZZ	02892	6X1916X22	.SHAFT, SHOULDERED	1
11	PAFZZ	02892	6X1916X21	.SHAFT, DRIVEN, PUMP	1
12	KFFZZ	02892	A791X73	.PACKING, PREFORMED PART OF KIT P/N 5705423	1
13	PFFZZ	02892	A300X1	.PLUG, PIPE	
14	XAFZZ	02892	2X19X25	.ADAPTER, HYDRAULIC P	1
15	KFFZZ	02892	A907X62	.SEAL, PLAIN PART OF KIT P/N 5705423	1
16	PAFZZ	02892	A515X27	.RING, RETAINING	1
17	KFFZZ	02892	A361X93	.RETAINER, PACKING PART OF KIT P/N 5705423	1
18	PAOZZ	97403	13211E9486	GASKET	1
19	PAOZZ	96906	MS27183-18	WASHER, FLAT	4
20	PAOZZ	96906	MS90728-110L	BOLT, SELF-LOCKING	4

END OF FIGURE

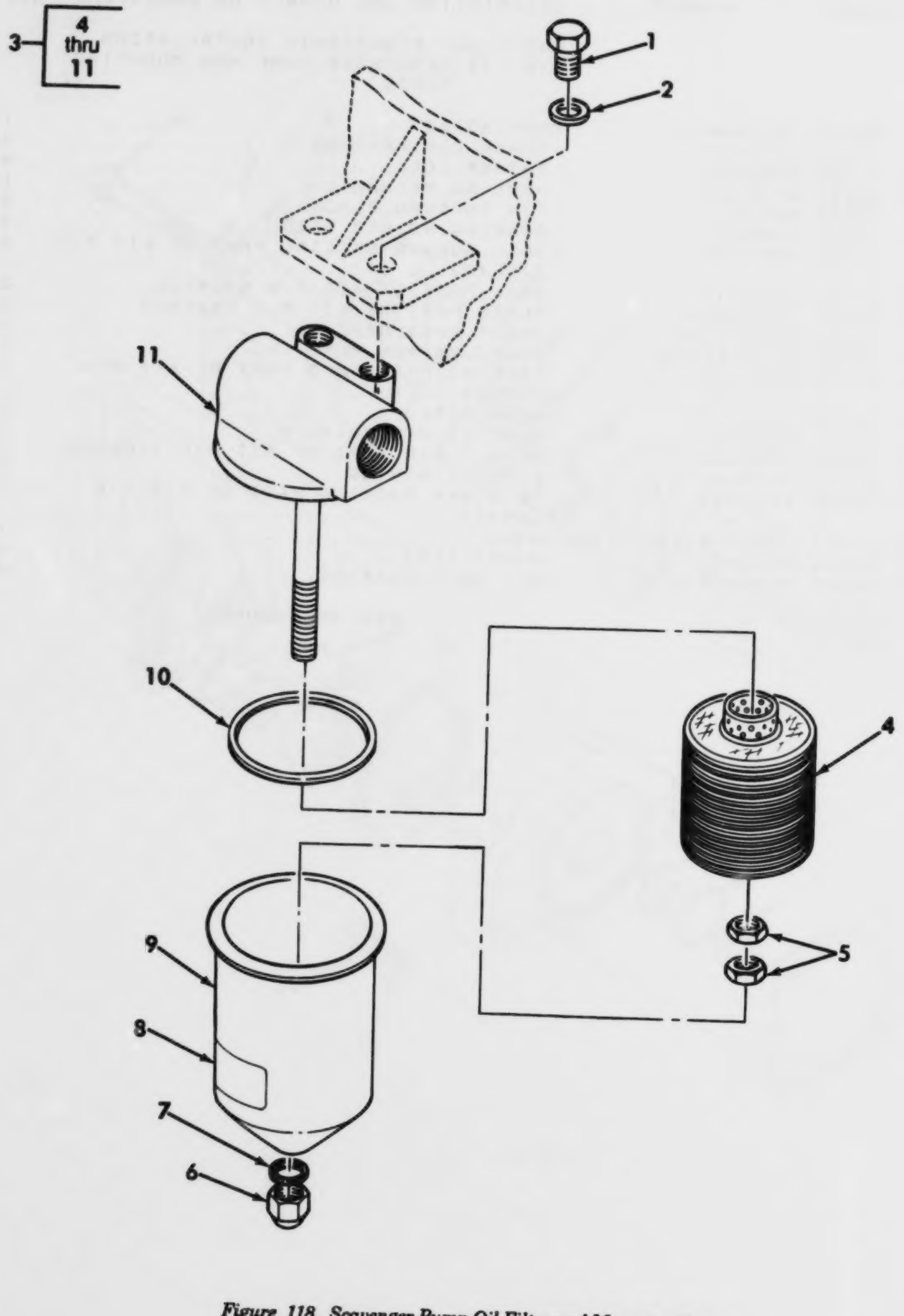

Figure 118. Scavenger Pump Oil Filter and Mounting Parts.

GROUP AU: POWERTRAIN INSTALLATION
FIG. 118 SCAVENGER PUMP OIL FILTER AND MOUNTING PARTS

(1) ITEM NO	(2) SMR CODE	(3) CAGEC	(4) PART NUMBER	(5) DESCRIPTION AND USABLE ON CODES(UOC)	(6) QTY
1	PAOZZ	96906	MS90728-60L	BOLT, SELF-LOCKING	2
2	PAOZZ	96906	MS27183-15	WASHER, FLAT	2
3	PAOOO	00736	03W182228	FILTER, FLUID	1
4	PAOZZ	00736	03RA18-231	.FILTER ELEMENT, FLUI	1
5	PAOZZ	00736	21002	.NUT	2
6	PAOZZ	00736	A15621	.NUT, PLAIN, CAP	1
7	PAOZZ	00736	A15621-1	.PACKING, PREFORMED	1
8	PFOZZ	00736	02FC30	.MARKER, IDENTIFICATI	1
9	XAOZZ	00736	B16367-158	.BOWL	1
10	PAOZZ	00736	A16367-207	.PACKING, PREFORMED	1
11	XAOZZ	00736	032A15-158	.HEAD, CYLINDER	1

END OF FIGURE

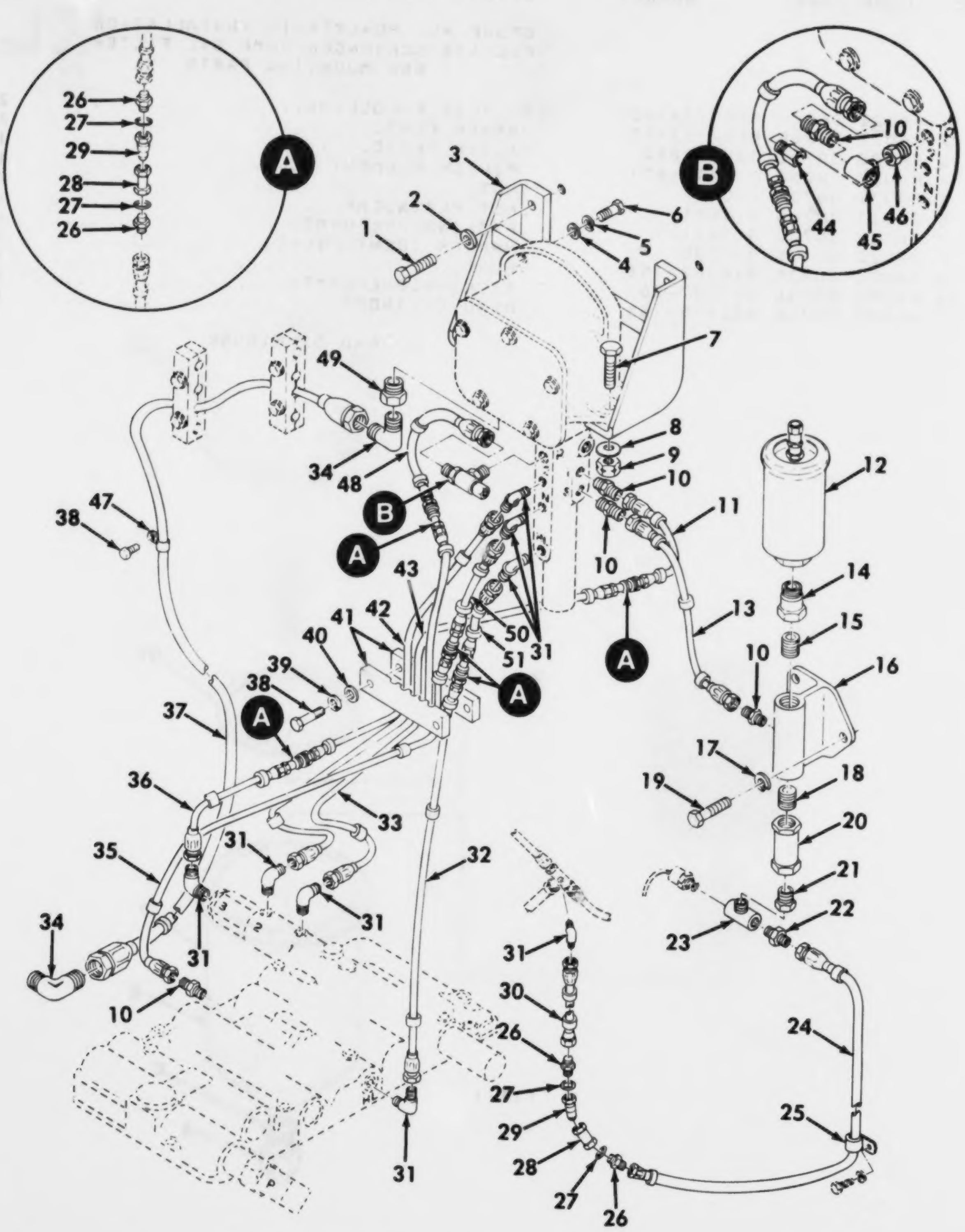

Figure 119. Hydraulic Shift Control Lines and Fittings.

GROUP AU: POWERTRAIN INSTALLATION
FIG. 119 HYDRAULIC SHIFT CONTROL LINES AND FITTINGS

(1) ITEM NO	(2) SMR CODE	(3) CAGEC	(4) PART NUMBER	(5) DESCRIPTION AND USABLE ON CODES(UOC)	(6) QTY
1	PAOZZ	96906	MS90725-60	BOLT,SELF-LOCKING	4
2	PAOZZ	96906	MS27183-14	WASHER,FLAT	4
3	PFOZZ	97403	13214E2429	BRACKET ASSEMBLY TR	1
4	PAOZZ	96906	MS27183-12	WASHER,FLAT	2
5	PAOZZ	96906	MS35338-45	WASHER,LOCK	2
6	PAOZZ	96906	MS90725-33	SCREW,CAP,HEXAGON H	2
7	PAOZZ	96906	MS90728-114	SCREW,CAP,HEXAGON H	2
8	PAOZZ	96906	MS27183-18	WASHER,FLAT	2
9	PAOZZ	96906	MS17829-8C	NUT,SELF-LOCKING,HE	2
10	PAOZZ	96906	MS51500A4	ADAPTER,STRAIGHT,PI	5
11	PAOZZ	19207	12357280-1	HOSE ASSEMBLY,NONME	1
12	PAOZZ	26337	857220	ACCUMULATOR,HYDRAUL	1
13	PAOZZ	19207	12357144	HOSE ASSEMBLY,NONME	1
14	PAOZZ	98441	0502-8-8	ADAPTER,STRAIGHT,PI	1
15	PAOZZ	91340	12175-31	NIPPLE,PIPE	1
16	PFOZZ	97403	13214E2392	BRACKET,MANIFOLD	1
17	PAOZZ	96906	MS35335-35	WASHER,LOCK	3
18	PAOZZ	96906	MS51953-49	NIPPLE,PIPE	1
19	PAOZZ	96906	MS90728-59	SCREW,CAP,HEXAGON H	3
20	PAOZZ	86768	483-3/8B1-2	VALVE,CHECK	1
21	PAOZZ	81348	WW-P-471BDOBCCB	BUSHING,PIPE	1
22	PAOZZ	96906	MS51500A4-4	ADAPTER,STRAIGHT,PI	1
23	PAOZZ	19207	12325725	TEE,PIPE	1
24	PAOZZ	19207	12357280-12	HOSE ASSEMBLY,NONME	1
25	PAOZZ	96906	MS21333-123	CLAMP,LOOP	1
26	PAOZZ	96906	MS51525A4-6	ADAPTER,STRAIGHT,TU	10
27	PAOZZ	96906	MS28778-6	PACKING,PREFORMED	10
28	PAOZZ	97111	H2-62SL-T6	COUPLING HALF,QUICK	5
29	PAOZZ	97111	H2-63-T6	COUPLING HALF,QUICK	5
30	PAOZZ	19207	12357280-8	HOSE ASSEMBLY,NONME	1
31	PAOZZ	96906	MS51504A4	ELBOW,PIPE TO TUBE	8
32	PAOZZ	19207	12357280-9	HOSE ASSEMBLY,NONME	1
33	PAOZZ	19207	12357280-11	HOSE ASSEMBLY,NONME	1
34	PAOZZ	96906	MS51504A8	ELBOW,PIPE TO TUBE	2
35	PAOZZ	19207	12357280-4	HOSE ASSEMBLY,NONME	1
36	PAOZZ	19207	12357280-6	HOSE ASSEMBLY,NONME	1
37	PAOZZ	19207	12357143	HOSE ASSEMBLY,NONME	1
38	PAOZZ	96906	MS90728-12	SCREW,CAP,HEXAGON H	3
39	PAOZZ	96906	MS35338-44	WASHER,LOCK	2
40	PAOZZ	96906	MS27183-10	WASHER,FLAT	2
41	PAOZZ	97403	13214E2631	HOLDER,HOSE	2
42	PAOZZ	19207	12357280-10	HOSE ASSEMBLY,NONME	1
43	PAOZZ	19207	12357280-3	HOSE ASSEMBLY,NONME	1
44	PAOZZ	19207	12325823	REDUCER,PIPE	1
45	PAOZZ	19207	12325726	TEE,PIPE	1
46	PAOZZ	81343	J514 2-2 140139C A	ADAPTER,STRAIGHT,PI	1
47	PAOZZ	96906	MS21333-75	CLAMP,LOOP	1

(1) ITEM NO	(2) SMR CODE	(3) CAGEC	(4) PART NUMBER	(5) DESCRIPTION AND USABLE ON CODES(UOC)	(6) QTY
48	PAOZZ	19207	12357280-7	HOSE ASSEMBLY,NONME..................	1
49	PAOZZ	81348	WW-P-471BDOBCDC	BUSHING,PIPE..........................	1
50	PAOZZ	19207	12357280-2	HOSE ASSEMBLY,NONME..................	1
51	PAOZZ	19207	12357280-5	HOSE ASSEMBLY,NONME..................	1

END OF FIGURE

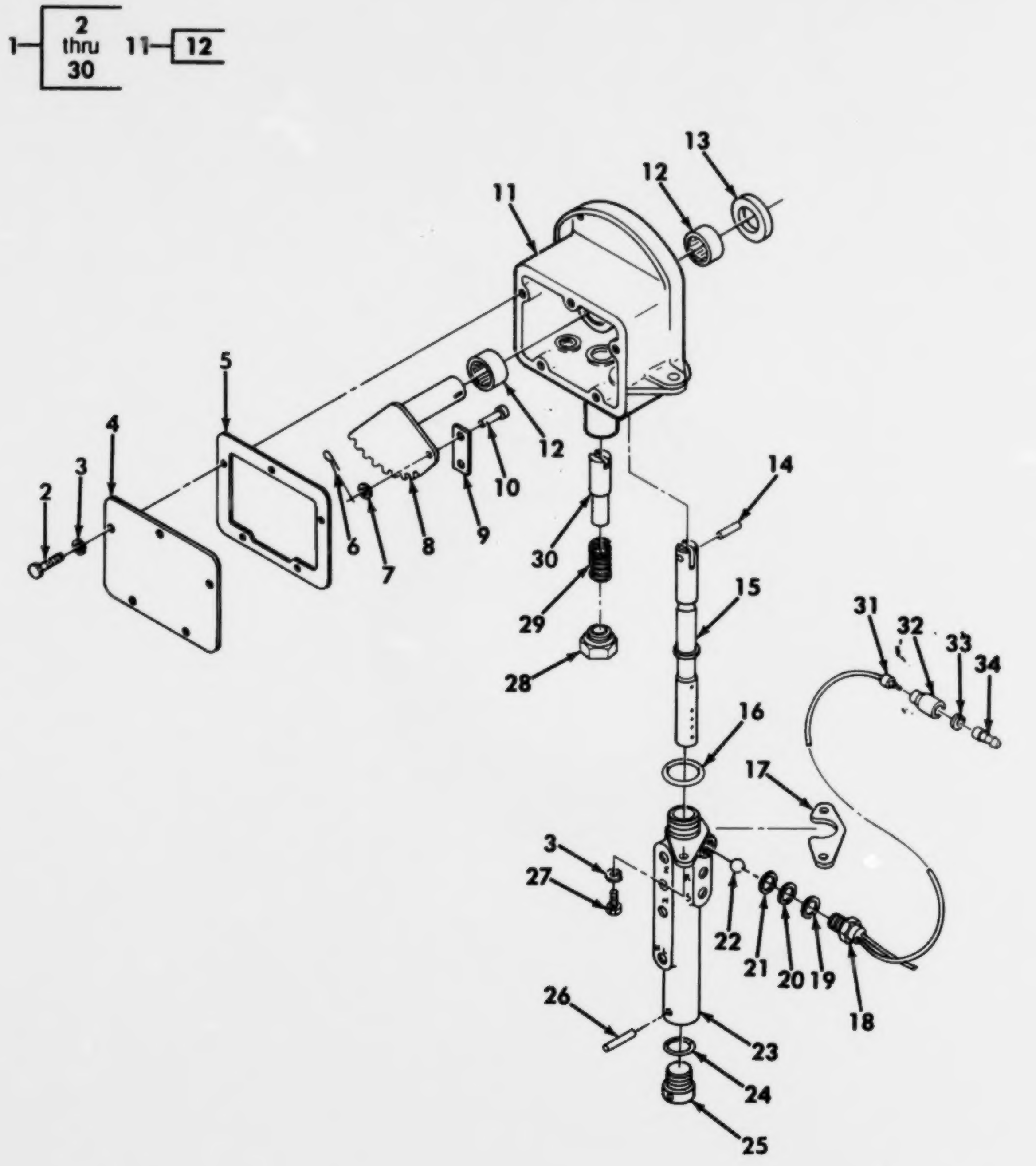

Figure 120. Hydraulic Shift Control Valve and Neutral Start Switch.

(1) ITEM NO	(2) SMR CODE	(3) CAGEC	(4) PART NUMBER	(5) DESCRIPTION AND USABLE ON CODES(UOC)	(6) QTY
				GROUP AU: POWERTRAIN INSTALLATION FIG. 120 HYDRAULIC SHIFT CONTROL VALVE AND NEUTRAL START SWITCH	
1	PAOFF	40152	241624	SERVOVALVE, HYDRAULI	1
2	PAFZZ	12603	1C512	.SCREW	5
3	PAFZZ	96906	MS35338-45	.WASHER, LOCK	7
4	PFFZZ	40152	227404	.COVER, ACCESS	1
5	PAFZZ	40152	227403	.GASKET	1
6	PAFZZ	96906	MS24665-132	.PIN, COTTER	1
7	PAFZZ	96906	MS27183-9	.WASHER, FLAT	1
8	PFFZZ	40152	241651	.DETENT PLATE	1
9	PFFZZ	40152	227396	.LINK, SHIFT	1
10	PAFZZ	40152	227395	.PIN, STRAIGHT, HEADED	1
11	XAFFF	89881	241830	.HOUSING ASSY	1
12	PAFZZ	96906	MS17131-32	.BEARING, ROLLER, NEED	1
13	PAFZZ	01212	411100R	.SEAL, PLAIN ENCASED	2
14	PAFZZ	40152	867753	.PIN, STRAIGHT, HEADLE	1
15	PAFZZ	40152	241658	.SPOOL, SPEED SELECT	1
16	PAFZZ	12603	25K30030	.PACKING, PREFORMED	1
17	PAFZZ	40152	227397	.SHIM	1
18	PAOZZ	40152	241653	.SWITCH, NEUTRAL STAR	V
19	PAOZZ	12603	222598	.WASHER, FLAT SHIM	1
20	PAOZZ	12603	224513	.WASHER, SHIFT CONTRO SHIM	V
21	PAOZZ	40152	224514	.WASHER, FLAT SHIM	V
22	PAOZZ	88042	AAF216CP20	.BALL, BEARING	V
23	XAFZZ	89881	241656	.BODY	1
24	PAFZZ	96906	MS28775-113	.PACKING, PREFORMED	1
25	PAFZZ	12603	220983	.STOP PRESSURE REGUL	1
26	PAFZZ	96906	MS16562-253	.PIN, SPRING	1
27	PFFZZ	12603	1C514	.SCREW, CAP, HEXAGON H	1
28	PAFZZ	12603	24K6	.PLUG, MACHINE THREAD	2
29	PAFZZ	40152	227402	.SPRING, HELICAL, COMP	1
30	PFFZZ	12603	228502	.PLUNGER	1
31	PAOZZ	81349	M43436/3-1	.BAND, MARKER	1
32	PAOZZ	19207	8338566	SHELL, ELECTRICAL CO	3
33	PAOZZ	19207	8338567	WASHER, SLOTTED	2
34	PAOZZ	96906	MS27148-2	CONTACT, ELECTRICAL	2

END OF FIGURE

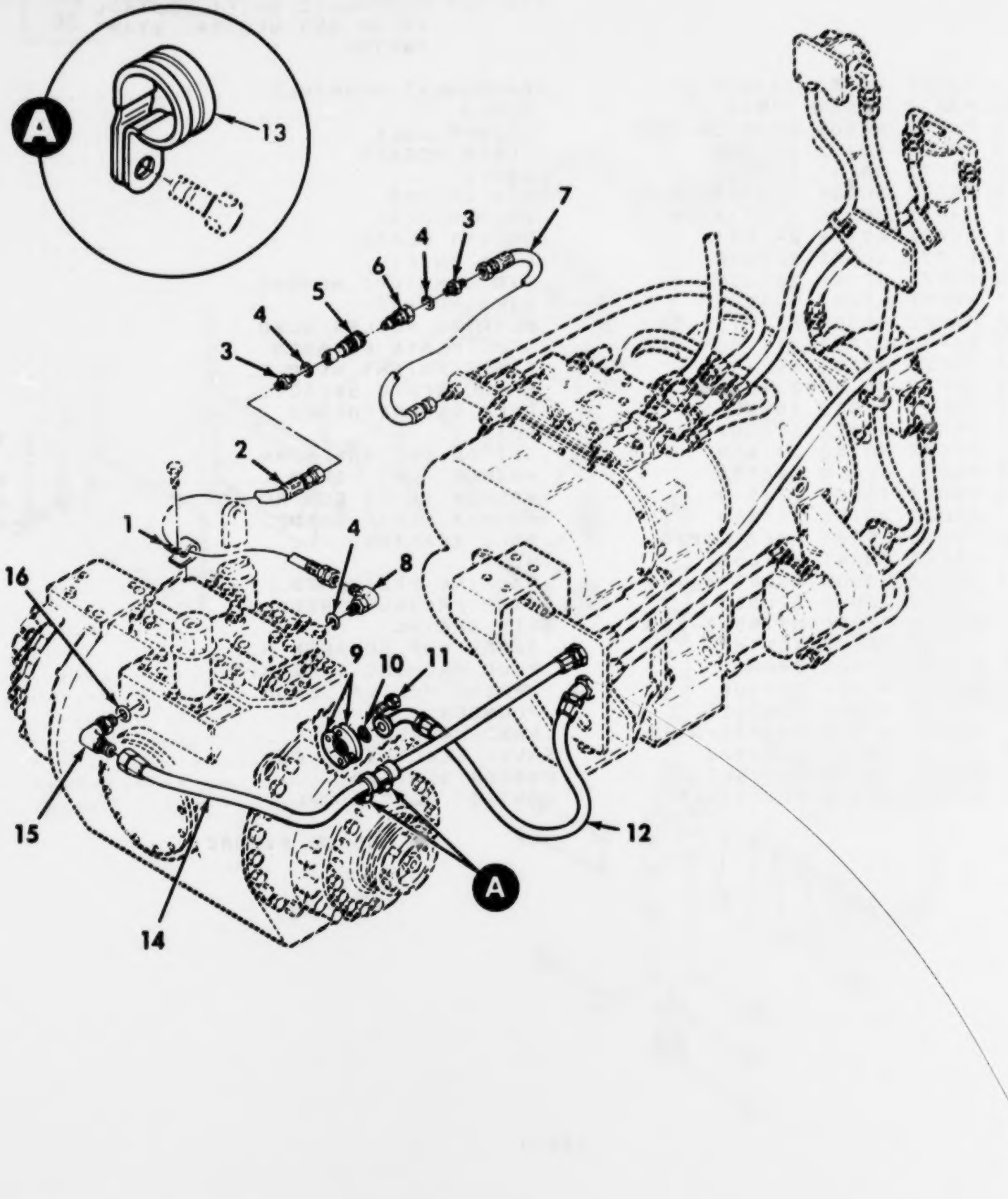

Figure 121. Transmission (Powertrain) Oil Hoses, Lines, and Fittings.

(1) ITEM NO	(2) SMR CODE	(3) CAGEC	(4) PART NUMBER	(5) DESCRIPTION AND USABLE ON CODES(UOC)	(6) QTY
				GROUP AU: POWERTRAIN INSTALLATION FIG.121 TRANSMISSION (POWERTRAIN) OIL HOSES, LINES, AND FITTINGS	
1	PAOZZ	19207	7529133-9	CLAMP,LOOP	1
2	PAOZZ	19207	12352677-11	HOSE ASSEMBLY,NONME	1
3	PAOZZ	96906	MS51525A16	ADAPTER,STRAIGHT,TU	2
4	PAOZZ	96906	MS28778-16	PACKING,PREFORMED	3
5	PAOZZ	97111	H8-62SL-T16	COUPLING HALF,QUICK	1
6	PAOZZ	97111	H8-63-T16	COUPLING HALF,QUICK	1
7	PAOZZ	19207	12352677-12	HOSE ASSEMBLY,NONME	1
8	PAOZZ	96906	MS51527A16	ELBOW,TUBE TO BOSS	1
9	PAOZZ	81349	MS2525/16-24	FLANGE,PIPE,SWIVEL	2
10	PAOZZ	96906	MS28775-225	PACKING,PREFORMED	1
11	PAOZZ	96906	MS90728-113L	BOLT,SELF-LOCKING	4
12	PAOZZ	19207	12352592	HOSE ASSEMBLY,NONME	1
13	PAOZZ	19207	7529133-7	CLAMP,LOOP	2
14	PAOZZ	19207	12352677-7	HOSE ASSEMBLY,NONME	1
15	PFOZZ	97403	13211E9018-9	ELBOW,TUBE TO BOSS	1
16	PAOZZ	96906	MS28778-20	PACKING,PREFORMED	1

END OF FIGURE

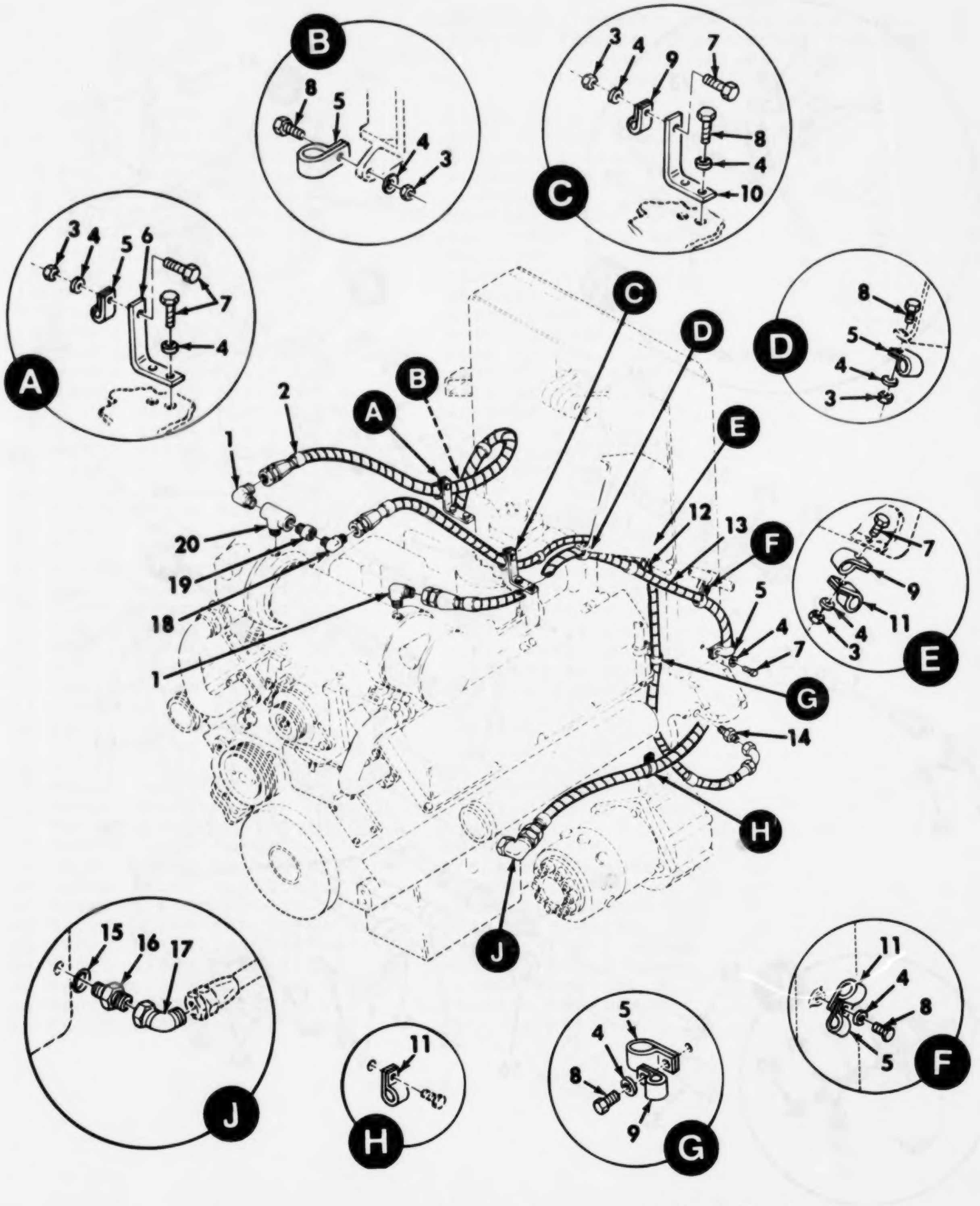

Figure 122. Transmission (Power Package) Oil Hoses, Lines, and Fittings (Sheet 1 of 2).

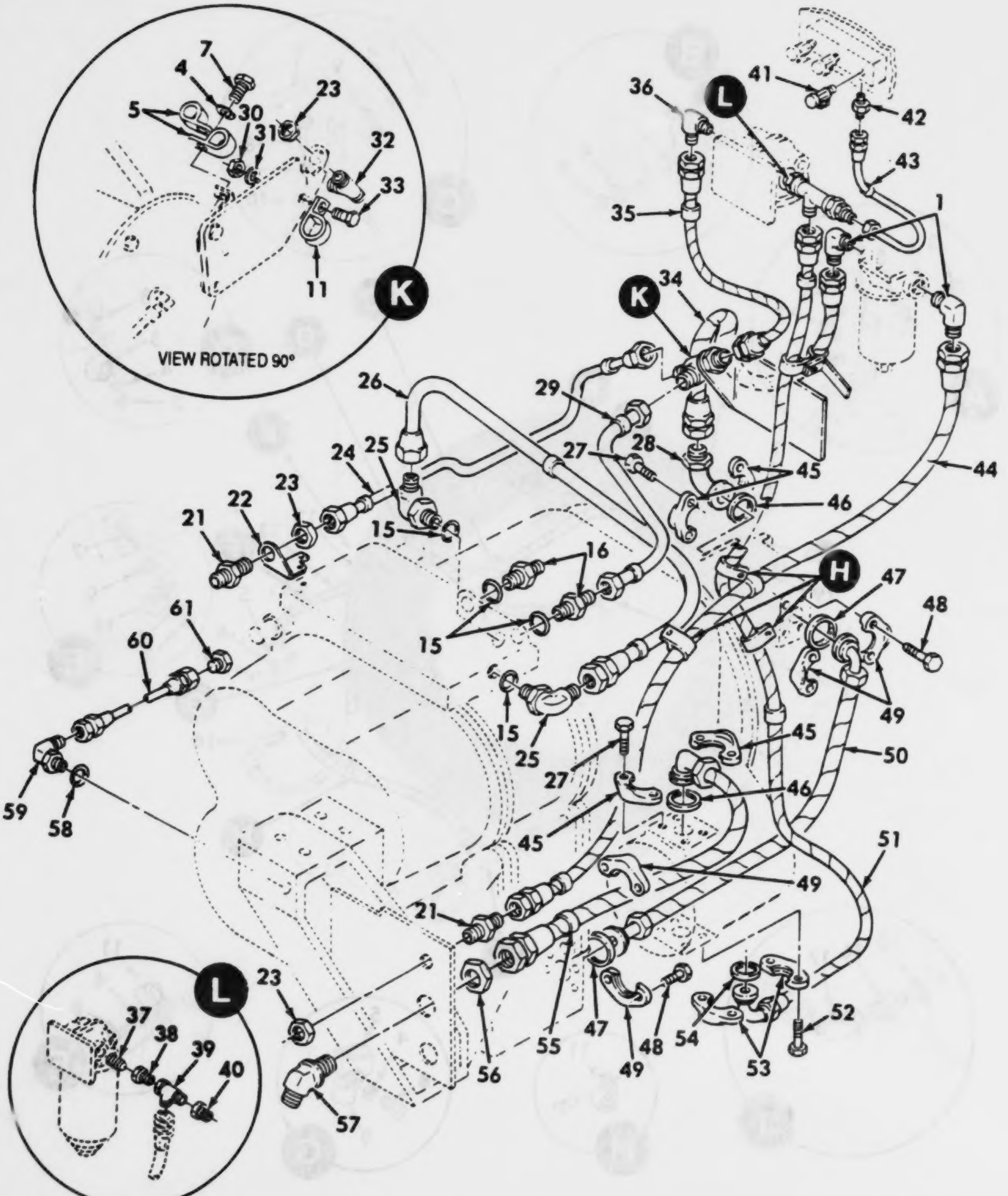

Figure 122. Transmission (Power Package) Oil Hoses, Lines, and Fittings (Sheet 2 of 2).

(1) ITEM NO	(2) SMR CODE	(3) CAGEC	(4) PART NUMBER	(5) DESCRIPTION AND USABLE ON CODES(UOC)	(6) QTY
				GROUP AU: POWERTRAIN INSTALLATION FIG. 122 TRANSMISSION (POWER PACKAGE) OIL HOSES, LINES, AND FITTINGS	
1	PAOZZ	96906	MS51504A16	ELBOW,PIPE TO TUBE..................	4
2	PAOZZ	19207	12352677-4	HOSE ASSEMBLY,NONME.................	1
3	PAOZZ	96906	MS51967-8	NUT,PLAIN,HEXAGON...................	5
4	PAOZZ	96906	MS9320-12	WASHER,FLAT.........................	13
5	PAOZZ	19207	7529133-9	CLAMP,LOOP..........................	8
6	PFOZZ	19207	12352649	BRACKET,ANGLE.......................	1
7	PAOZZ	96906	MS90728-58L	BOLT,SELF-LOCKING...................	7
8	PAOZZ	96906	MS90728-60L	BOLT,SELF-LOCKING...................	6
9	PAOZZ	19207	7397787	CLAMP,LOOP..........................	3
10	PFOZZ	19207	12352650	BRACKET,MOUNTING....................	1
11	PAOZZ	19207	7529133-7	CLAMP,LOOP..........................	7
12	PAOZZ	19207	12352618	HOSE ASSEMBLY,NONME.................	1
13	PAOZZ	19207	12352677-3	HOSE ASSEMBLY,NONME.................	1
14	PAOZZ	96906	MS51500A6-2	ADAPTER,STRAIGHT,PI.................	1
15	PAOZZ	96906	MS28778-16	PACKING,PREFORMED...................	5
16	PAOZZ	96906	MS51525A16	ADAPTER,STRAIGHT,TU.................	3
17	PAOZZ	96906	MS51522A16	ELBOW,TUBE..........................	1
18	PAOZZ	96906	MS51504A6-6	ELBOW,PIPE TO TUBE..................	1
19	PAOZZ	81349	WW-P-471BEOBCFC	BUSHING,PIPE........................	1
20	PAOZZ	19207	12331952	TEE,PIPE............................	1
21	PAOZZ	96906	MS51520A16	NIPPLE,TUBE.........................	2
22	PFOZZ	19207	12357430	BRACKET,MOUNTING....................	1
23	PAOZZ	96906	MS51860-60	LOCKNUT,TUBE FITTIN.................	3
24	PAOZZ	19207	12352652	TUBE ASSEMBLY,METAL.................	1
25	PAOZZ	96906	MS51527A16S	ELBOW,TUBE TO BOSS..................	2
26	PAOZZ	19207	12352620	TUBE ASSEMBLY,METAL.................	1
27	PAOZZ	96906	MS90728-89L	BOLT,SELF-LOCKING...................	8
28	PAOZZ	00624	500024-20-16S	ELBOW,TUBE TO BOSS..................	1
29	PAOZZ	19207	12352621	TUBE ASSEMBLY,METAL.................	1
30	PAOZZ	21439	01857-007	NUT,PLAIN,HEXAGON...................	1
31	PAOZZ	96906	MS9320-14	WASHER,FLAT.........................	1
32	PAOZZ	19207	12352655	TEE,TUBE............................	1
33	PAOZZ	96906	MS90728-110L	BOLT,SELF-LOCKING...................	1
34	PAOZZ	19207	12352677-8	HOSE ASSEMBLY,NONME.................	1
35	PAOZZ	19207	12352677-1	HOSE ASSEMBLY,NONME.................	1
36	PAOZZ	96906	MS51504A16-12	ELBOW,PIPE TO TUBE..................	1
37	PAOZZ	96906	MS51953-97	NIPPLE,PIPE.........................	1
38	PAOZZ	19207	7350911	BUSHING,PIPE........................	1
39	PAOZZ	96906	MS51514A16	TEE,PIPE TO TUBE....................	1
40	PAOZZ	19207	12355293-2	REDUCER,TUBE........................	1
41	PAOZZ	91816	P59-500	VALVE,BLEEDER,HYDRA.................	1
42	PAOZZ	96906	MS51500A6	ADAPTER,STRAIGHT,PI.................	1
43	PAOZZ	19207	12355287-2	HOSE ASSEMBLY,NONME.................	1
44	PAOZZ	19207	12352677-2	HOSE ASSEMBLY,NONME.................	1
45	PAOZZ	81349	M52525/16-20	FLANGE,PIPE,SWIVEL..................	4
46	PAOZZ	96906	MS28775-222	PACKING,PREFORMED...................	2
47	PAOZZ	96906	MS28775-225	PACKING,PREFORMED...................	2

(1) ITEM NO	(2) SMR CODE	(3) CAGEC	(4) PART NUMBER	(5) DESCRIPTION AND USABLE ON CODES(UOC)	(6) QTY
48	PAOZZ	96906	MS90728-113L	BOLT,SELF-LOCKING....................	8
49	PAOZZ	81349	M52525/16-24	FLANGE,PIPE,SWIVEL...................	4
50	PAOZZ	19207	12352651	HOSE ASSEMBLY,NONME..................	1
51	PAOZZ	19207	12352510	HOSE ASSEMBLY,NONME..................	1
52	PAOZZ	96906	MS90728-62L	BOLT,SELF-LOCKING....................	4
53	PAOZZ	81349	M52525/16-16	FLANGE,PIPE SWIVEL...................	2
54	PAOZZ	96906	MS28775-219	PACKING,PREFORMED....................	1
55	PAOZZ	19207	12352593	HOSE ASSEMBLY,NONME..................	1
56	PAOZZ	96906	MS51860-12	NUT,PLAIN,HEXAGON....................	1
57	PAOZZ	96906	MS51509A24	ELBOW,TUBE...........................	1
58	PAOZZ	96906	MS28778-8	PACKING,PREFORMED....................	1
59	PAOZZ	96906	MS51527A8	ELBOW,TUBE TO BOSS...................	1
60	PAOZZ	19207	12357162	HOSE ASSEMBLY,NONME..................	1
61	PAOZZ	96906	MS51518B8	PLUG,TUBE FITTING,T..................	1

END OF FIGURE

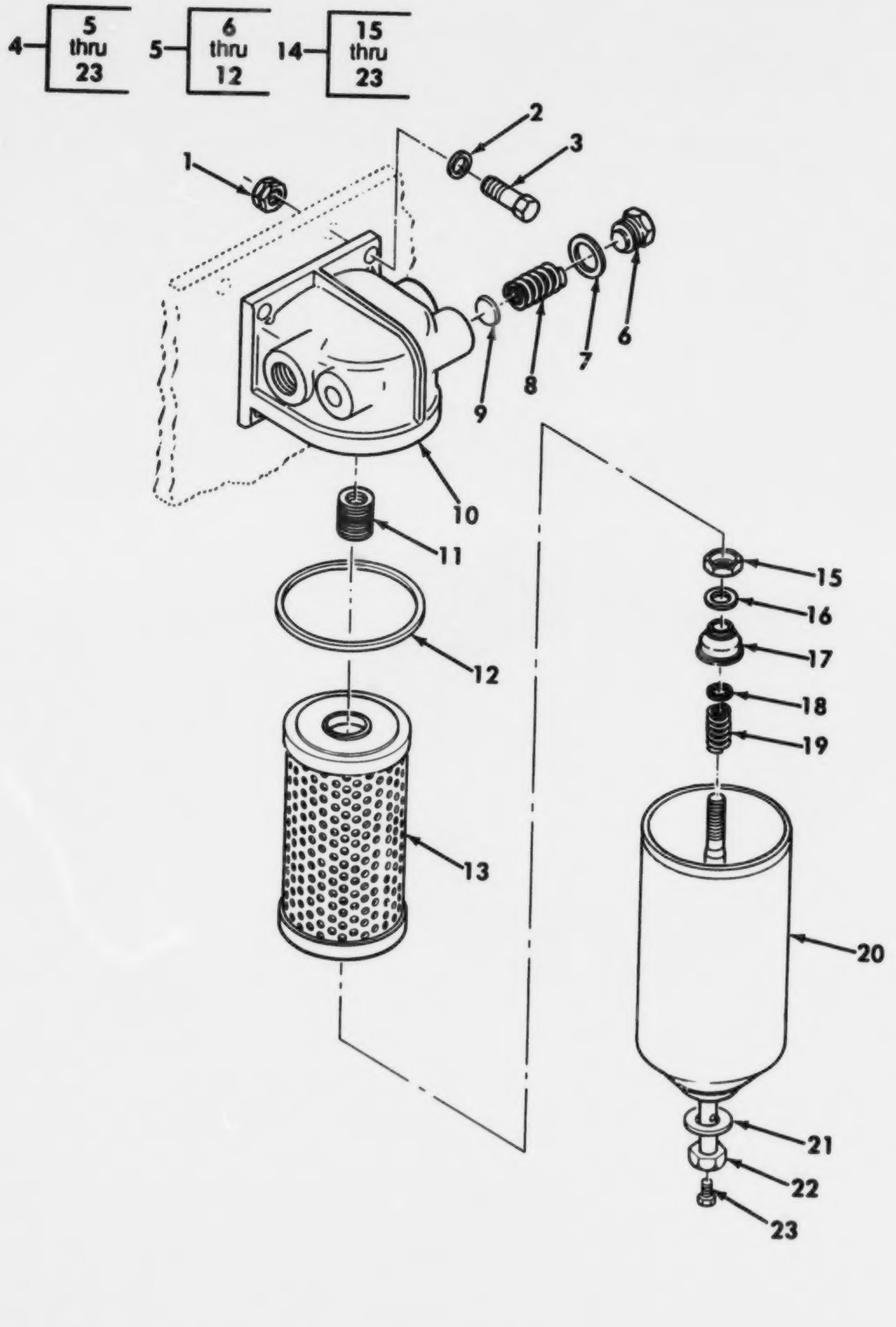

Figure 123. Transmission Oil Filter and Mounting Parts.

(1) ITEM NO	(2) SMR CODE	(3) CAGEC	(4) PART NUMBER	(5) DESCRIPTION AND USABLE ON CODES(UOC)	(6) QTY
				GROUP AU: POWERTRAIN INSTALLATION FIG. 123 TRANSMISSION OIL FILTER AND MOUNTING PARTS	
1	PAOZZ	96906	MS51967-8	NUT, PLAIN, HEXAGON..................	4
2	PAOZZ	96906	MS27183-15	WASHER, FLAT.........................	4
3	PAOZZ	96906	MS90728-64L	BOLT, SELF-LOCKING...................	4
4	PBOOO	9E462	5575208	FILTER ELEMENT, FLUI.................	1
5	XAOOO	24617	5574892	.BASE ASSEMBLY.......................	1
6	XDOZZ	24617	5574894	..PLUG, MACHINE THREAD...............	1
7	PFOZZ	70040	5575086	..GASKET.............................	1
8	PFOZZ	24617	5574896	..SPRING, HELICAL, COMP..............	1
9	XAOZZ	24617	5573870	..DISK, VALVE........................	1
10	XAOZZ	24617	5574893	..BASE...............................	1
11	PFOZZ	24617	454557	..INSERT, SCREW THREAD...............	1
12	KFOZZ	24617	5573534	..GASKET PART OF KIT P/N 5705422....	1
13	KFOZZ	24617	5573102	.ELEMENT PART OF KIT P/N 5705422....	1
14	XAOOO	24617	5575210	.SHELL & STUD ASSY...................	1
15	XAOZZ	24617	9420174	..PALNUT.............................	1
16	PFOZZ	24617	5187310	..PACKING, PREFORMED.................	1
17	PFOZZ	24617	5187309	..RETAINER, PACKING..................	1
18	PFOZZ	24617	5577938	..SPACER, RING.......................	1
19	XAOZZ	24617	25010222	..SPRING.............................	1
20	XAOZZ	24617	5575211	..SHELL..............................	1
21	KFOZZ	24617	5573538	..WASHER, FLAT PART OF KIT P/N 5705422..........................	1
22	PFOZZ	70040	5575206	..BOLT, FLUID PASSAGE................	1
23	PAOZZ	24617	444613	..PLUG, PIPE.........................	1

END OF FIGURE

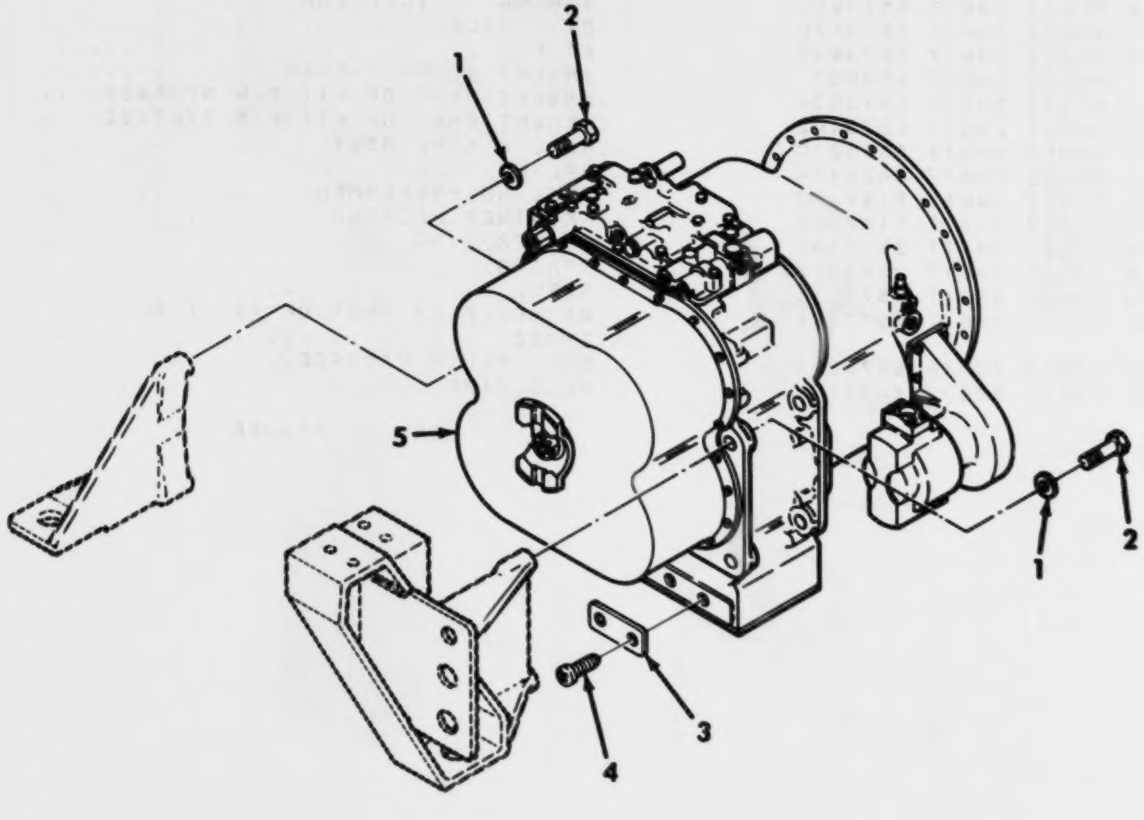

Figure 124. Transmission Assembly and Mounting Parts.

GROUP AU: POWERTRAIN INSTALLATION
FIG. 124 TRANSMISSION ASSEMBLY AND MOUNTING PARTS

(1) ITEM NO	(2) SMR CODE	(3) CAGEC	(4) PART NUMBER	(5) DESCRIPTION AND USABLE ON CODES(UOC)	(6) QTY
1	PAFZZ	96906	MS27183-23	WASHER,FLAT	4
2	PAFZZ	96906	MS90728-190L	BOLT,SELF-LOCKING	4
3	PFDZZ	40152	241901	PLATE,IDENTIFICATIO	1
4	PADZZ	96906	MS51861-34	SCREW,TAPPING,THREA	2
5	PAFDD	40152	288835	TRANSMISSION,HYDRAU	1

END OF FIGURE

1—2

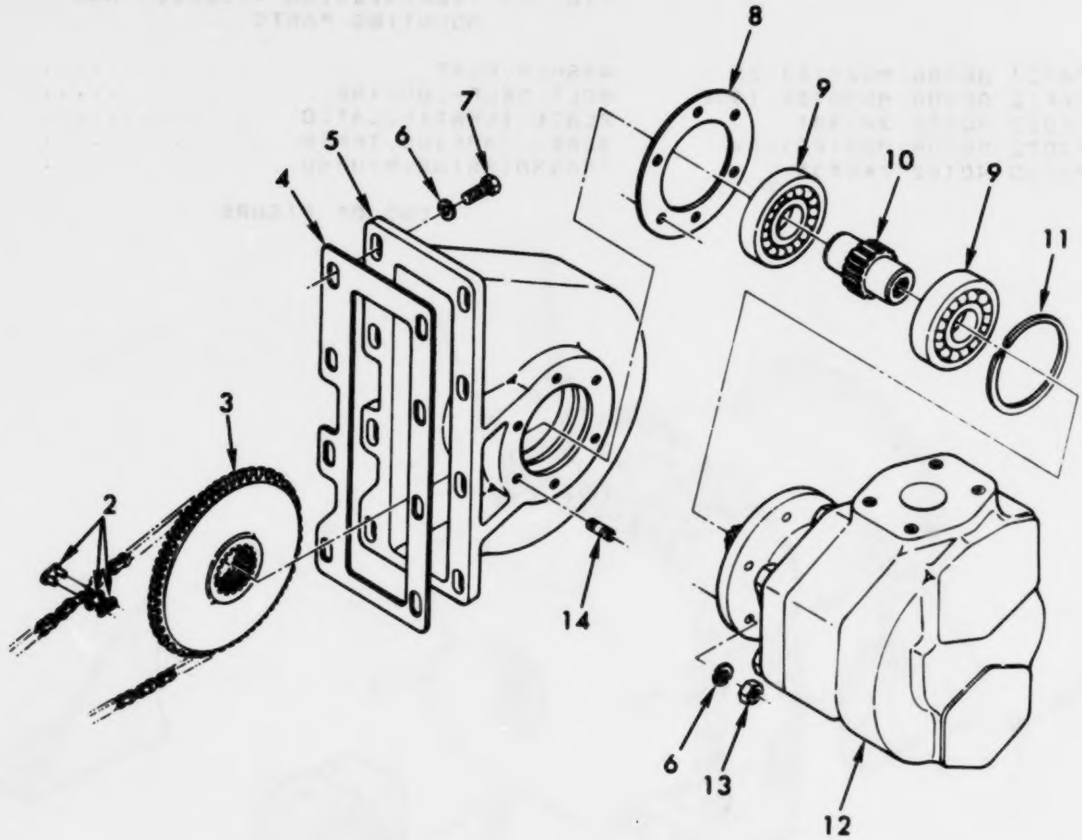

Figure 125. Transmission Charging Pump and Related Parts.

(1) ITEM NO	(2) SMR CODE	(3) CAGEC	(4) PART NUMBER	(5) DESCRIPTION AND USABLE ON CODES(UOC)	(6) QTY
				GROUP AU: POWERTRAIN INSTALLATION FIG. 125 TRANSMISSION CHARGING PUMP AND RELATED PARTS	
1	PAFZZ	40152	239097	.CHAIN,ROLLER......................	1
2	PAFZZ	71198	35 S/C C/L	..LINK,ROLLER CHAIN................	1
3	PFFZZ	40152	239096	.SPROCKET WHEEL....................	1
4	PAFZZ	40152	239095	.GASKET............................	1
5	PFFZZ	40152	239094	.HOUSING,MECHANICAL................	1
6	PAFZZ	12603	4E06	.WASHER,LOCK.......................	14
7	PAFZZ	96906	MS90728-62	.SCREW,CAP,HEXAGON H...............	8
8	PAFZZ	12603	235961	.GASKET............................	1
9	PAFZZ	12603	743458	.BEARING,BALL,ANNULA...............	2
10	PFFZZ	40152	219883	.GEAR,SPUR.........................	1
11	PAFZZ	40152	223973	.RING,RETAINING....................	1
12	PAFZZ	40152	450247	.PUMP ASSEMBLY CHARG...............	1
13	PAFZZ	12603	8D06	.NUT,PLAIN,HEXAGON.................	6
14	PBFZZ	12603	203253	.STUD,PLAIN........................	6

END OF FIGURE

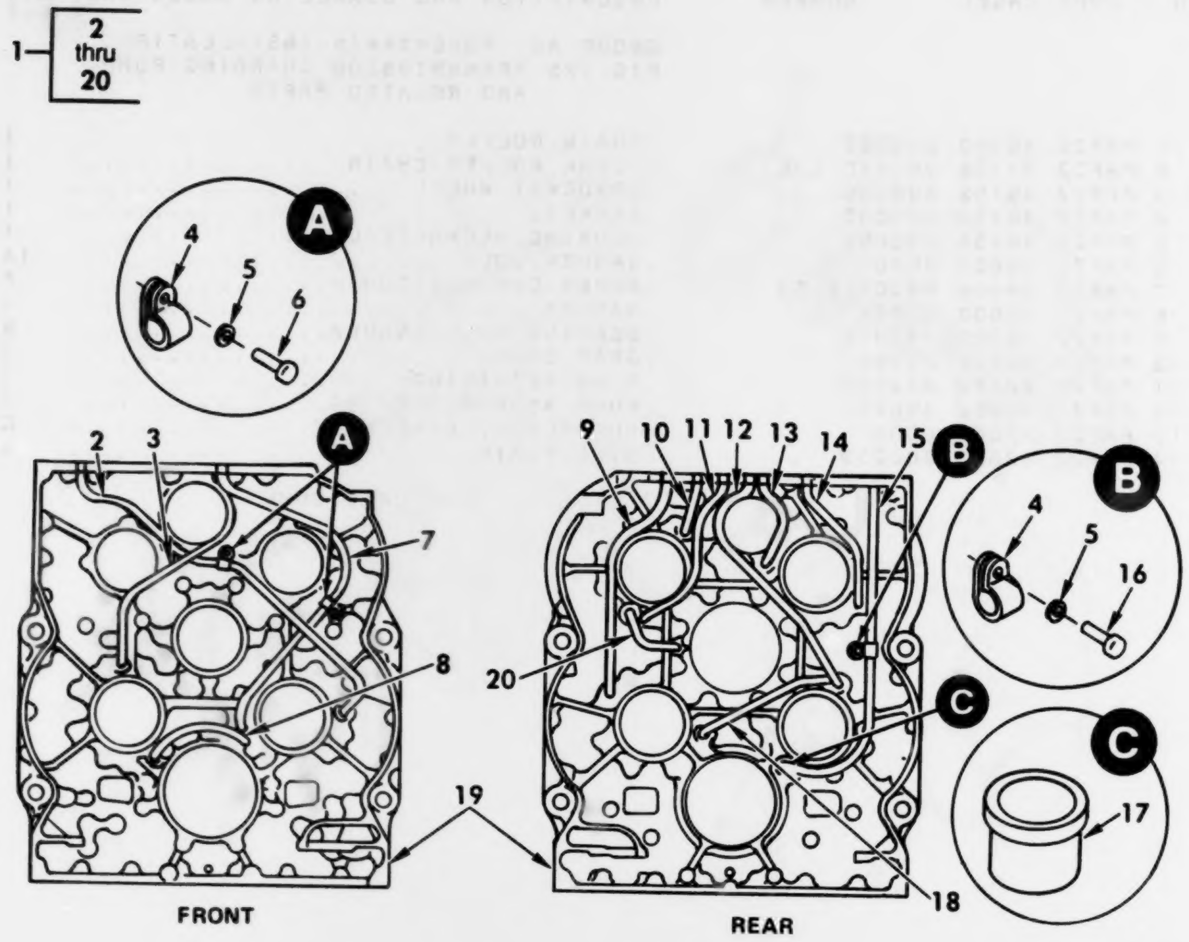

Figure 126. Transmission Case and Oil Lines Assembly.

(1) ITEM NO	(2) SMR CODE	(3) CAGEC	(4) PART NUMBER	(5) DESCRIPTION AND USABLE ON CODES(UOC)	(6) QTY
				GROUP AU: POWERTRAIN INSTALLATION FIG.126 TRANSMISSION CASE AND OIL LINES ASSEMBLY	
1	PFDZZ	40152	239399	.CASE AND TUBE ASSEM................	1
2	PFDZZ	40152	239052	..TUBE,BENT,METALLIC...............	1
3	PFDZZ	40152	239053	..TUBE,BENT,METALLIC...............	1
4	PFDZZ	12603	6H29	..CLAMP,LOOP.......................	3
5	PFDZZ	12603	25E15	..WASHER,FLAT......................	3
6	PADZZ	12603	1H530	..RIVET,SOLID......................	2
7	PFDZZ	40152	239054	..TUBE,BENT,METALLIC...............	1
8	PFDZZ	40152	239055	..TUBE,BENT,METALLIC...............	1
9	PFDZZ	40152	239056	..TUBE,BENT,METALLIC...............	1
10	PBDZZ	40152	239057	..TUBE,BENT,METALLIC...............	1
11	PFDZZ	40152	239060	..TUBE,BENT,METALLIC...............	1
12	PFDZZ	40152	239061	..TUBE,BENT,METALLIC...............	1
13	PFDZZ	40152	239062	..TUBE,BENT,METALLIC...............	1
14	PFDZZ	40152	239058	..TUBE,BENT,METALLIC...............	1
15	PFDZZ	40152	239059	..TUBE,BENT,METALLIC...............	1
16	XDDZZ	12603	1H534	..RIVET............................	1
17	PFDZZ	12603	222067	..SLEEVE...........................	26
18	PBDZZ	77237	239064	..TUBE,BENT,METALLIC...............	1
19	XADZZ	89881	239051	..CASE.............................	1
20	PFDZZ	40152	239063	..TUBE,BENT,METALLIC...............	1

END OF FIGURE

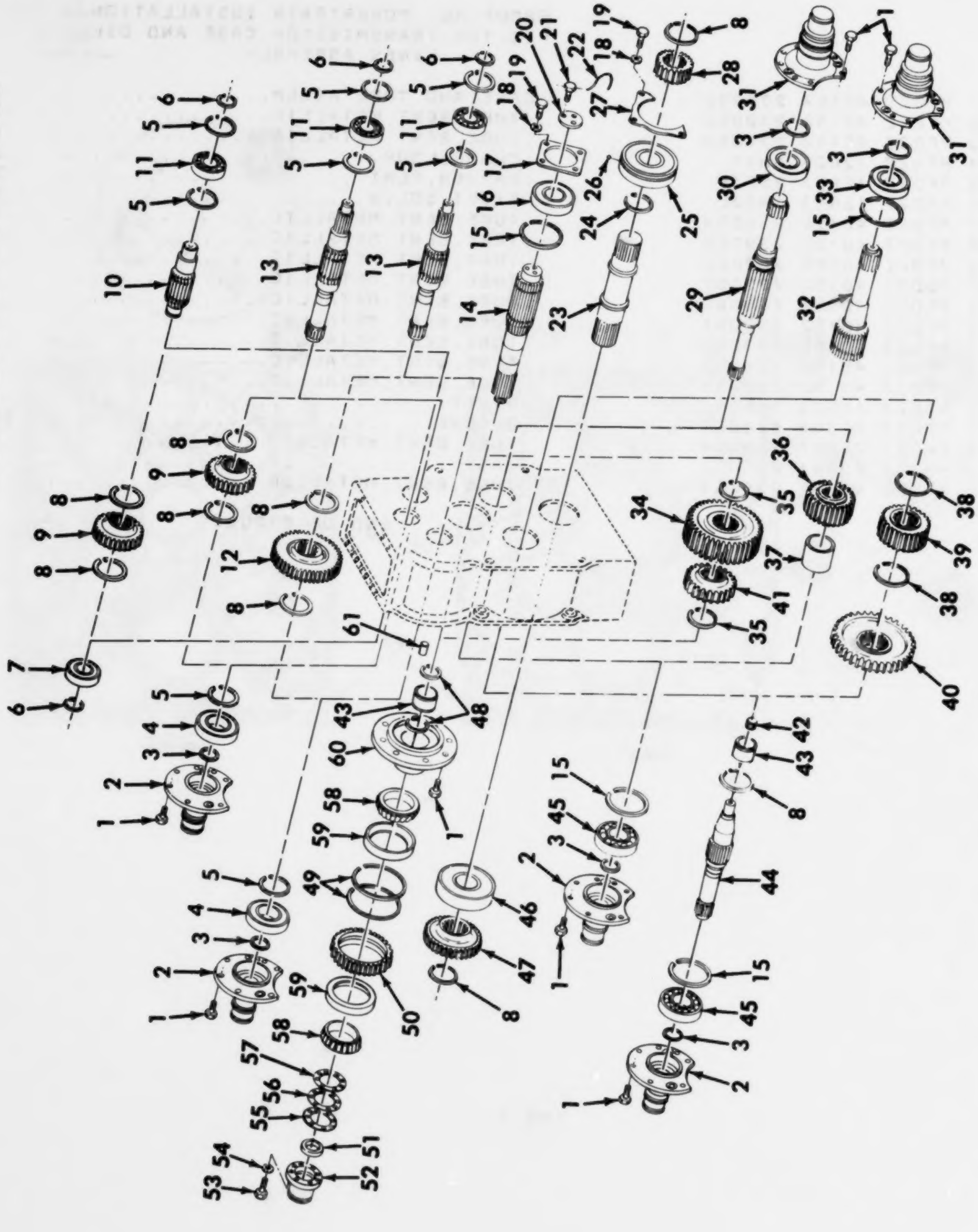

Figure 127. Transmission Shafts, Gears, and Supports.

(1) ITEM NO	(2) SMR CODE	(3) CAGEC	(4) PART NUMBER	(5) DESCRIPTION AND USABLE ON CODES(UOC)	(6) QTY
				GROUP AU: POWERTRAIN INSTALLATION FIG.127 TRANSMISSION SHAFTS, GEARS, AND SUPPORTS	
1	PADZZ	40152	239455	.BOLT,MACHINE	50
2	PFDZZ	40152	240407	.SUPPORT,CLUTCH ASSE	4
3	PADZZ	96906	MS16624-1215	.RING,RETAINING	6
4	PADZZ	24617	BU1211L	.BEARING,ROLLER,CYLI	2
5	PADZZ	96906	MS16625-1354	.RING,RETAINING	8
6	PADZZ	12603	224083	.RING,RETAINING	4
7	PADZZ	96906	MS19077-11	.BEARING,ROLLER,CYLI	1
8	PADZZ	12603	711161	.RING,RETAINING	9
9	PFDZZ	77237	239070	.GEAR,SPUR	2
10	PFDZZ	40152	239144	.SHAFT,SHOULDERED	1
11	PADZZ	40152	225603	.BEARING,BALL,ANNULA	3
12	PFDZZ	40152	239071	.GEAR,SPUR	1
13	PFDZZ	40152	239143	.SHAFT,SHOULDERED	2
14	PFDZZ	40152	239148	.SHAFT,SHOULDERED	1
15	PADZZ	40152	223882	.RING,RETAINING	4
16	PADZZ	98878	SB22211	.BEARING,ROLLER,SELF	1
17	PADZZ	40152	239104	.PLATE,RETAINING,BEA	1
18	PADZZ	96906	MS35338-47	.WASHER,LOCK	7
19	PADZZ	12603	1C716	.BOLT,SPECIAL	7
20	PADZZ	40152	239103	.SPACER,PLATE	1
21	PADZZ	12603	22C714	.SCREW,CAP,HEXAGON H	3
22	MDDZZ	96906	MS20995C47AR	.WIRE,NONELECTRICAL MAKE FROM NONELECTRICAL WIRE,P/N MS20995C47	V
23	PFDZZ	40152	217548	.SHAFT,SHOULDERED	1
24	PFDZZ	40152	233662	.SPACER,RING	1
25	PADZZ	92563	SB22313-12	.BEARING,ROLLER,SELF	1
26	PADZZ	12603	10J08	.BALL,BEARING	1
27	PADZZ	40152	217560	.PLATE,RETAINING,BEA	1
28	PFDZZ	40152	239074	.GEAR,SPUR	1
29	PFDZZ	40152	232393	.SHAFT,SHOULDERED	1
30	PADZZ	51600	U-5211-L	.BEARING,ROLLER,CYLI	1
31	PFDZZ	12603	217156	.SUPPORT AND PLUG,CL	2
32	PFDZZ	40152	239080	.SHAFT,SHOULDERED	1
33	PADZZ	52676	22211C	.BEARING,ROLLER,SELF	1
34	PFDZZ	40152	239149	.GEAR,SPUR	1
35	PADZZ	96906	MS16624-1262	.RING,RETAINING	2
36	PFDZZ	40152	239147	.GEAR,SPUR	1
37	PFDZZ	40152	241781	.SPACER,SLEEVE	1
38	PADZZ	96906	MS16624-1325	.RING,RETAINING	2
39	PFDZZ	40152	239081	.GEAR,SPUR	1
40	PFDZZ	40152	239138	.GEAR,SPUR	1
41	PFDZZ	40152	239150	.GEAR,SPUR	1
42	PADZZ	12603	230886	.ROLLER ASSEMBLY,JOU	1
43	PADZZ	60380	WJ344024	.RETAINER AND ROLLER	2
44	PBDZZ	40152	239078	.SHAFT,SHOULDERED	1
45	PADZZ	03504	225840	.BEARING,BALL,ANNULA	2
46	PADZZ	43334	U1313TM	.BEARING,ROLLER,CYLI	1
47	PFDZZ	40152	239075	.GEAR,SPUR	1

(1) ITEM NO	(2) SMR CODE	(3) CAGEC	(4) PART NUMBER	(5) DESCRIPTION AND USABLE ON CODES(UOC)	(6) QTY
48	PADZZ	40152	223870	.RING,RETAINING	[illegible]
49	XDDZZ	12603	6002628	.RING,RETAINING	[illegible]
50	PFDZZ	40152	239112	.GEAR,SPUR	[illegible]
51	PADZZ	01212	410389R	.SEAL,PLAIN ENCASED	1
52	PFDZZ	40152	239115	.RETAINER,PACKING	1
53	PADZZ	12603	946524	.SCREW,CAP,HEXAGON H	[illegible]
54	PADZZ	96906	MS35338-45	.WASHER,LOCK	[illegible]
55	PADZZ	40152	239116	.SHIM .004	V
56	PADZZ	40152	239121	.SHIM .007	V
57	PADZZ	40152	239122	.SHIM .010	V
58	PADZZ	60038	L319249	.CONE AND ROLLERS,TA	2
59	PADZZ	60038	L319210	.CUP,TAPERED ROLLER	2
60	PFDZZ	40152	239107	.HOUSING,BEARING UNI	1
61	PADZZ	12603	214295	.PIN	2

END OF FIGURE

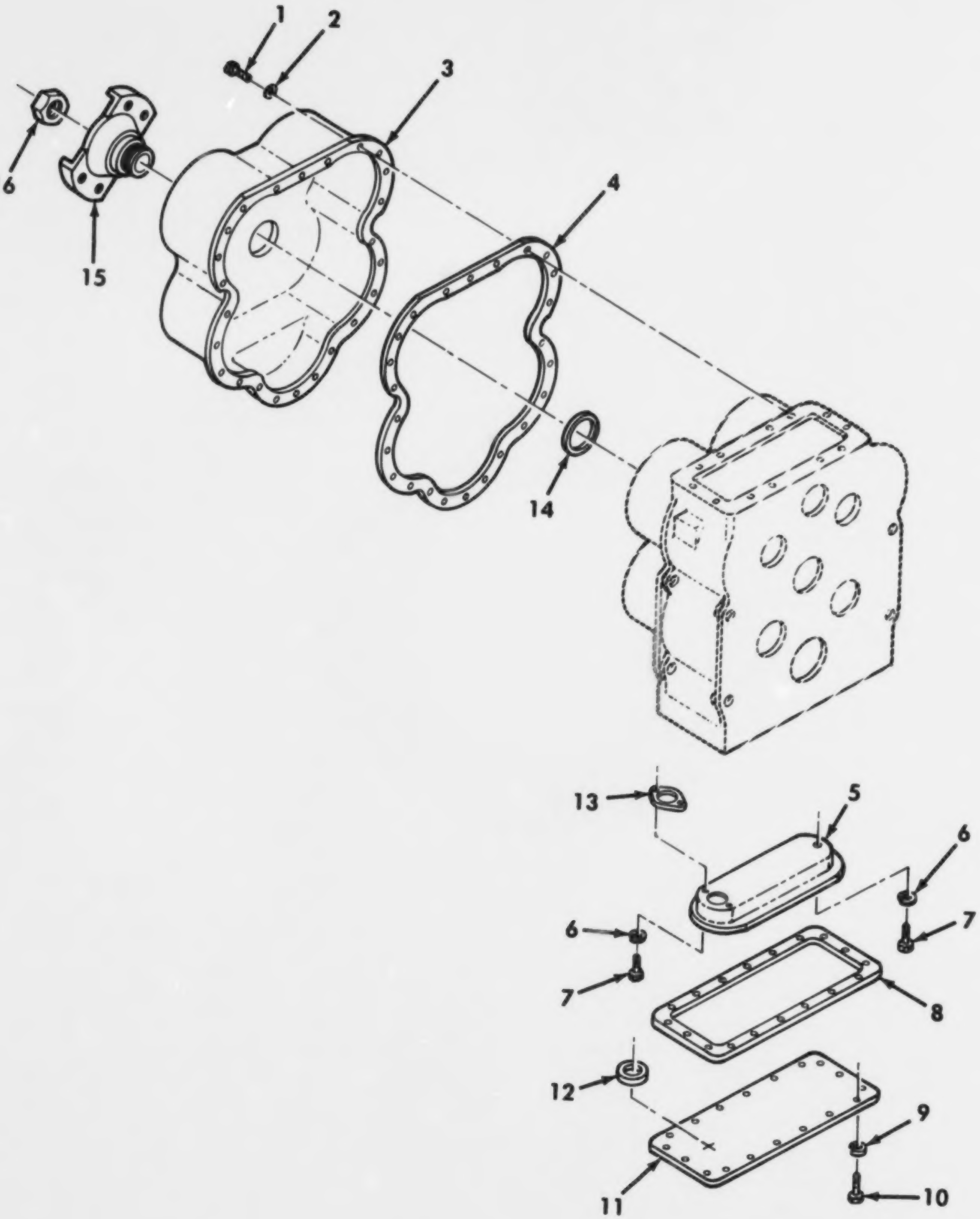

Figure 128. Transmission Output Flange, Clutch Cover, and Oil Sump.

GROUP AU: POWERTRAIN INSTALLATION
FIG. 128 TRANSMISSION OUTPUT FLANGE, CLUTCH COVER, AND OIL SUMP

(1) ITEM NO	(2) SMR CODE	(3) CAGEC	(4) PART NUMBER	(5) DESCRIPTION AND USABLE ON CODES(UOC)	(6) QTY
1	PAFZZ	12603	21C612	.BOLT,SELF-LOCKING..................	24
2	XDFZZ	40152	237328	.WASHER,CONCAVE.....................	24
3	PFFZZ	40153	239065	.COVER,ACCESS.......................	1
4	PAFZZ	77237	239066	.GASKET.............................	1
5	PAFZZ	40152	239067	.STRAINER ELEMENT,SE................	1
6	PAFZZ	12603	4E06	.WASHER,LOCK........................	3
7	PAFZZ	12603	1C636	.SCREW,CAP,HEXAGON H................	3
8	PAFZZ	40152	237154	.GASKET.............................	1
9	PAFZZ	96906	MS35333-42	.WASHER,LOCK........................	18
10	PAFZZ	96906	MS51096-359	.SCREW,CAP,HEXAGON H................	18
11	PFFZZ	40152	239069	.COVER,ACCESS.......................	1
12	PAFZZ	31007	304709C1	.MAGNET,PERMANENT...................	2
13	PAFZZ	12603	218376	.GASKET.............................	1
14	PAFZZ	96906	MS28775-228	.PACKING,PREFORMED..................	1
15	PFOZZ	40152	240869	.FLANGE,COMPANION,UN................	1
16	PAOZZ	12603	222960	.NUT,SELF-LOCKING,SI................	1

END OF FIGURE

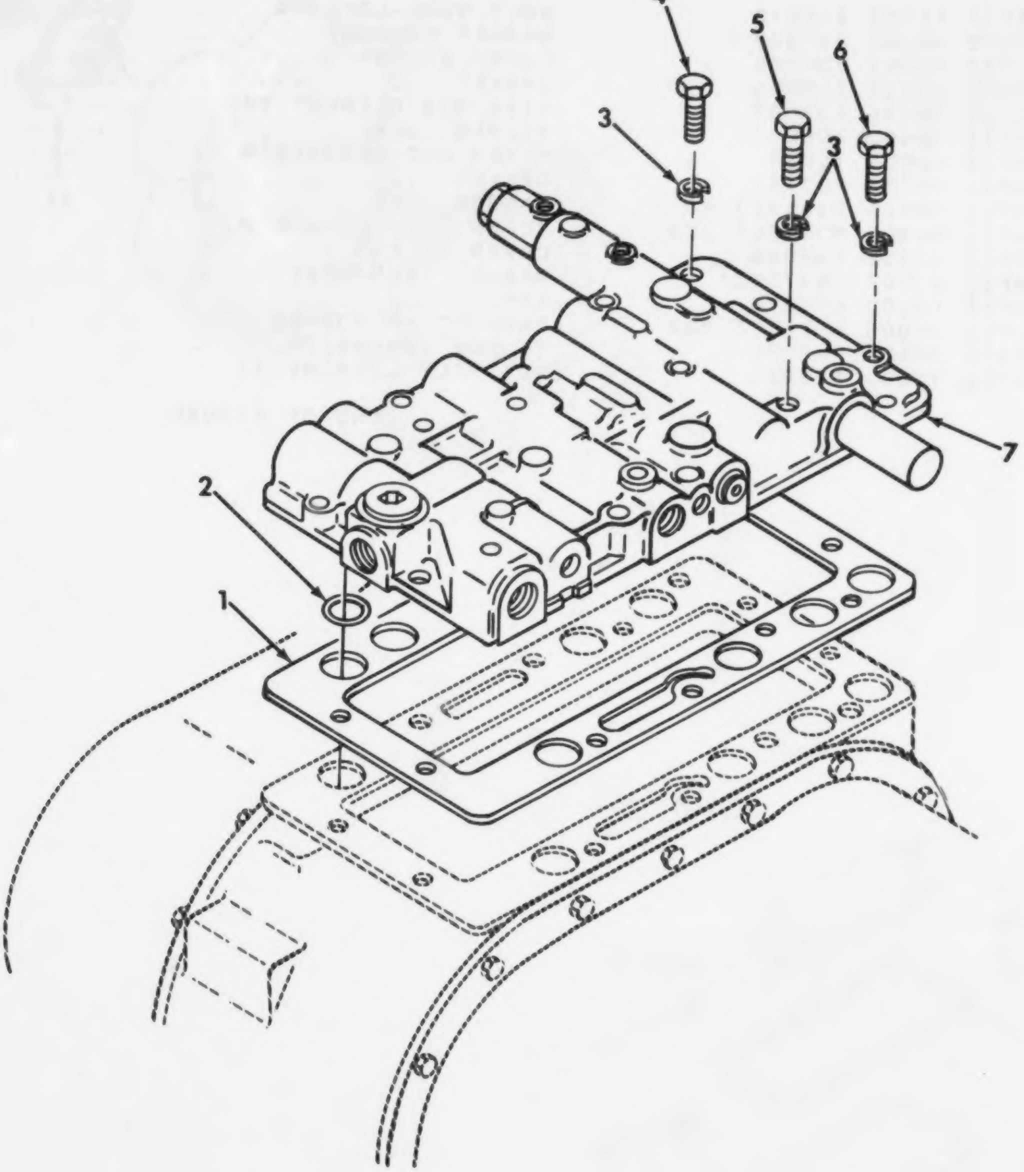

Figure 129. Transmission Control Valve Installation.

(1) ITEM NO	(2) SMR CODE	(3) CAGEC	(4) PART NUMBER	(5) DESCRIPTION AND USABLE ON CODES(UOC)	(6) QTY
				GROUP AU: POWERTRAIN INSTALLATION FIG.129 TRANSMISSION CONTROL VALVE INSTALLATION	
1	PADZZ	12603	217653	.GASKET	1
2	PADZZ	12603	25K40026	.SEAL,PLAIN ENCASED	8
3	PADZZ	12603	4E06	.WASHER,LOCK	12
4	PADZZ	12603	1C616	.BOLT,MACHINE	4
5	PADZZ	12603	1C640J	.SCREW,CAP,HEXAGON H	6
6	PADZZ	96906	MS90728-64	.SCREW,CAP,HEXAGON H	2
7	PADDD	40152	239047	.VALVE CONTROL,ASSEM	1

END OF FIGURE

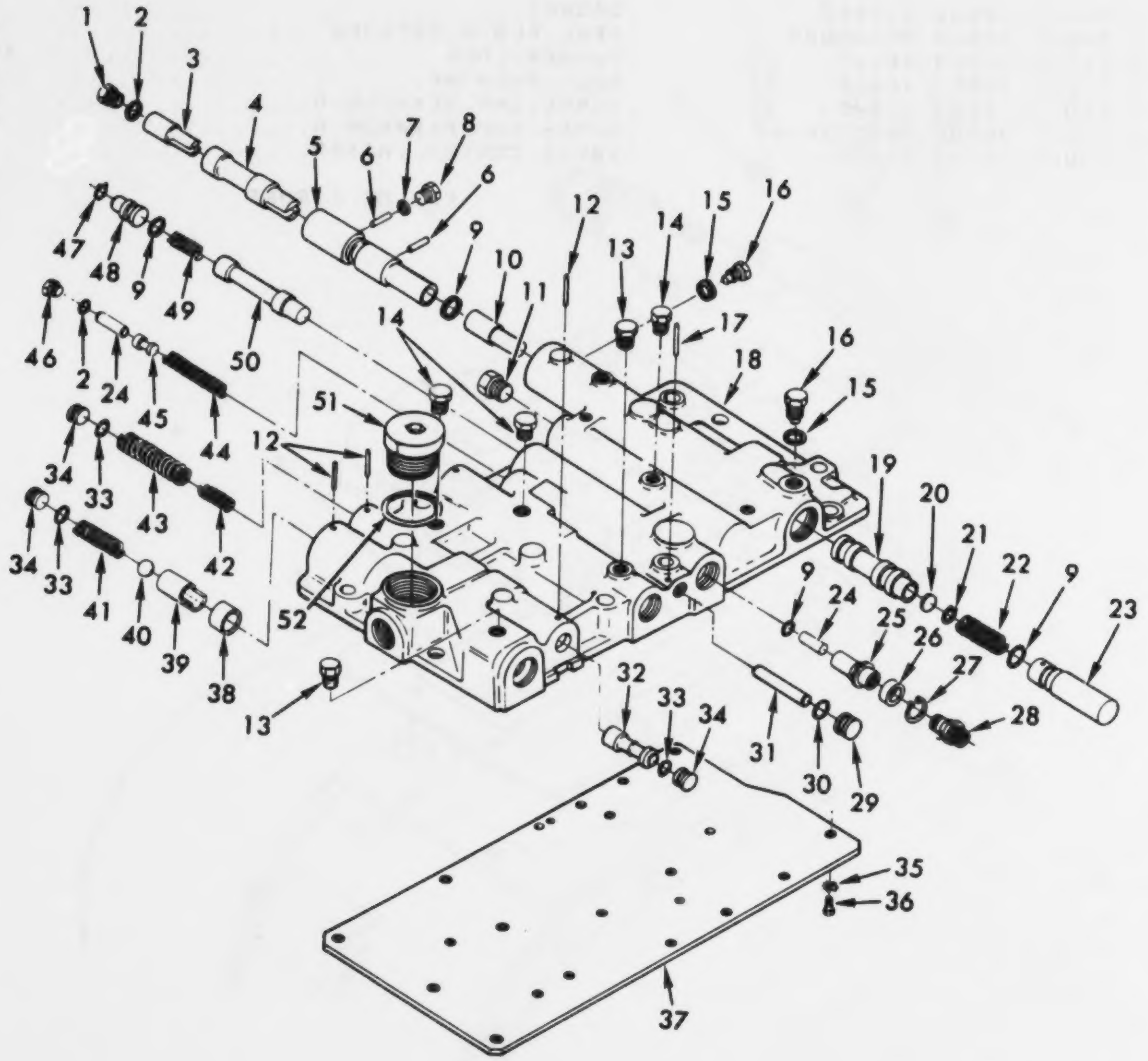

Figure 130. Transmission Control Valve Assembly.

(1) ITEM NO	(2) SMR CODE	(3) CAGEC	(4) PART NUMBER	(5) DESCRIPTION AND USABLE ON CODES(UOC)	(6) QTY
				GROUP AU: POWERTRAIN INSTALLATION FIG. 130 TRANSMISSION CONTROL VALVE ASSEMBLY	
1	PFDZZ	40152	227418	..ADAPTER,STRAIGHT,PI	1
2	PADZZ	12603	91F-07	..PACKING,PREFORMED	2
3	PADZZ	40152	228096	..VALVE	1
4	PADZZ	40152	228095	..VALVE,TRACTOR	1
5	PFDZZ	12603	228094	..HOUSING	1
6	PADZZ	03504	106358	..ROLLER,BEARING	2
7	PADZZ	40152	743314	..WASHER,SPECIAL	1
8	PADZZ	40152	227423	..PLUG,MACHINE THREAD	1
9	PADZZ	12603	25K30030	..PACKING,PREFORMED	4
10	PADZZ	40152	227550	..VALVE,TRACTOR	1
11	PADZZ	12603	16F08	..PLUG,PIPE	1
12	PADZZ	40152	300058	..PIN,STRAIGHT,HEADED	3
13	PADZZ	12603	40K-04	..PLUG,PIPE	2
14	PADZZ	12603	40K02	..PLUG,PIPE	3
15	PADZZ	40152	731964	..SEAL,PLAIN ENCASED	2
16	PADZZ	40152	227422	..PLUG	2
17	PADZZ	12603	654724	..PIN,SPECIAL	1
18	XADZZ	89881	239090	..COVER	1
19	PFDZZ	40152	227555	..VALVE,TRACTOR	1
20	PFDZZ	40152	227556	..DISK,SOLID,PLAIN	1
21	PADZZ	12603	659041	..RING	1
22	PADZZ	40152	227558	..SPRING,SPECIAL	1
23	PADZZ	12603	227557	..PLUG,HOUSING END CO	1
24	PFDZZ	40152	227562	..PISTON	2
25	PFDZZ	40152	227561	..GUIDE,TRACTOR	1
26	PFDZZ	12603	230106	..SPACER,SLEEVE	1
27	PADZZ	96906	MS16627-1112	..RING,RETAINING	1
28	PADZZ	12603	36F1	..COUPLING,PIPE	1
29	PADZZ	12603	220983	..STOP PRESSURE REGUL	1
30	PADZZ	96906	MS28775-113	..PACKING,PREFORMED	1
31	PFDZZ	12603	230520	..PIN,STRAIGHT,HEADLE	1
32	PADZZ	40152	239527	..SLIDE,DIRECTIONAL C	1
33	PADZZ	12603	25K40024	..PACKING,PREFORMED	3
34	PFDZZ	89346	222041	..PLUG,REGULATING	3
35	PADZZ	96906	MS35335-34	..WASHER,LOCK	17
36	PADZZ	12603	1C512	..SCREW	17
37	PFDZZ	40152	239091	..COVER,ACCESS	1
38	PADZZ	12603	217650	..SEAT,BALL SOCKET	1
39	PFDZZ	40152	217652	..SPACER,TRANSMISSION	1
40	PADZZ	96906	MS19061-20019	..BALL,BEARING	1
41	PADZZ	40152	239092	..SPRING,HELICAL,COMP	1
42	PADZZ	12603	217648	..SPRING,HELICAL,COMP	1
43	PADZZ	12603	217649	..SPRING,HELICAL,COMP	1
44	PADZZ	03504	231134	..SPRING,HELICAL,COMP	1
45	PFDZZ	03504	230105	..SPOOL,VALVE NEUTRAL	1
46	PADZZ	03504	230104	..GUIDE,PISTON	1
47	PADZZ	96906	MS16627-1112	..RING,RETAINING	1
48	PADZZ	03504	230103	..CAP,SPRING	1

(1) ITEM NO	(2) SMR CODE	(3) CAGEC	(4) PART NUMBER	(5) DESCRIPTION AND USABLE ON CODES(UOC)	(6) QTY
49	PADZZ	40152	227564	..SPRING,SPECIAL....................	1
50	PFDZZ	03504	230102	..VALVE SPOOL,HIGH-LO...............	1
51	PADZZ	12603	47K10	..PLUG,MACHINE THREAD...............	1
52	PADZZ	12603	91F-10	..PACKING,PREFORMED.................	1

END OF FIGURE

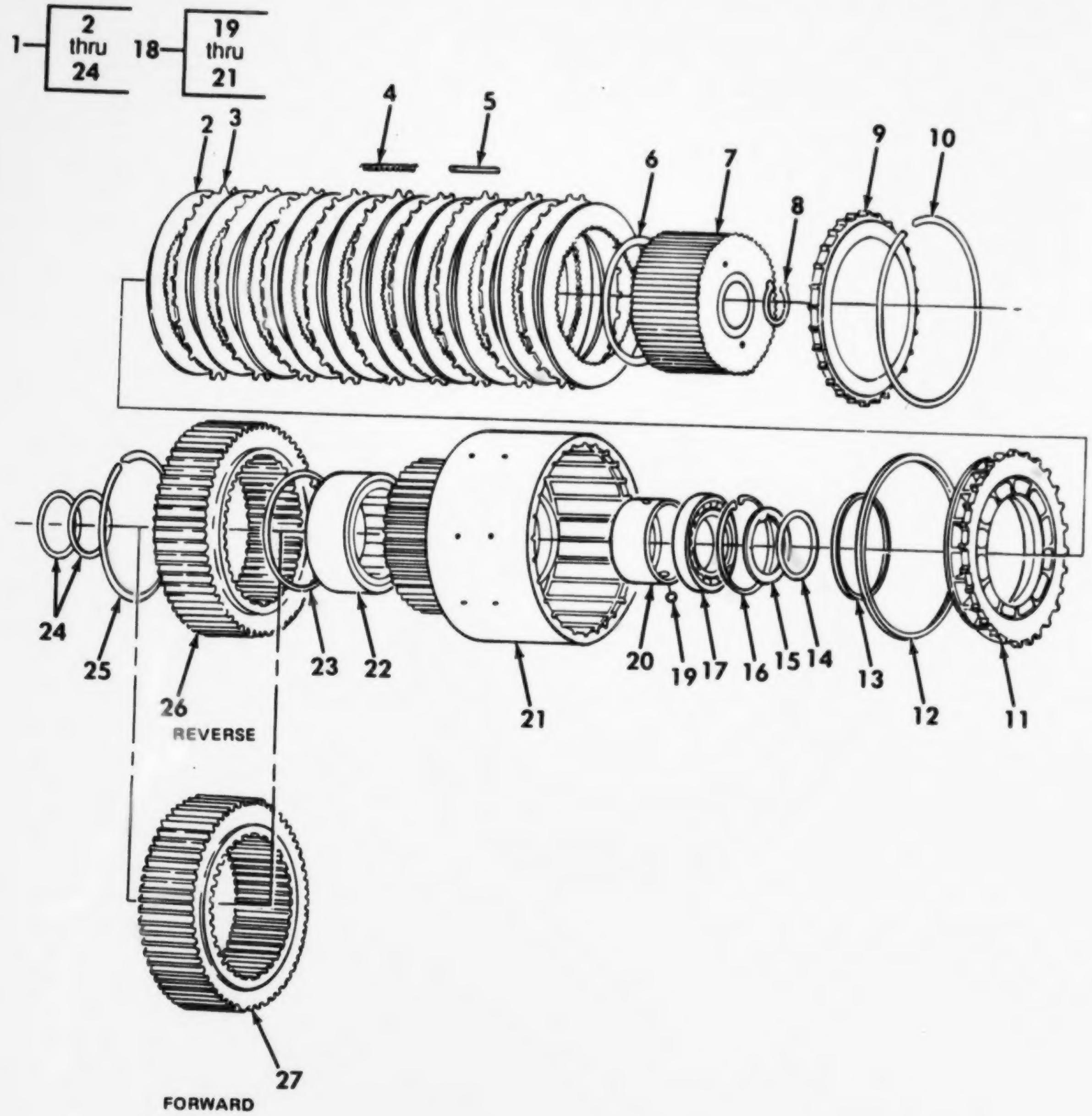

Figure 131. Transmission 1st and 2nd Forward/Reverse Clutch Assemblies and Gears.

(1) ITEM NO	(2) SMR CODE	(3) CAGEC	(4) PART NUMBER	(5) DESCRIPTION AND USABLE ON CODES(UOC)	(6) QTY
				GROUP AU: POWERTRAIN INSTALLATION FIG.131 TRANSMISSION 1ST AND 2ND FORWARD/REVERSE CLUTCH ASSEMBLIES AND GEARS	
1	ADDDD	89881	1&2F/1&2R/CLUTCH	.CLUTCH ASSY	2
2	PADZZ	40152	232778	..DISK,CLUTCH INNER	10
3	PADZZ	12603	232394	..DISK,CLUTCH OUTER	9
4	PADZZ	12603	217334	..SPRING,HELICAL,COMP	6
5	PADZZ	12603	217599	..PIN,STRAIGHT,HEADLE	6
6	PADZZ	40152	217509	..RING,RETAINING	1
7	PFDZZ	12603	217158	..CLUTCH HUB ASSEMBLY	1
8	PADZZ	12603	659764	..RING,RETAINING	1
9	PADZZ	12603	217161	..DISK,CLUTCH	2
10	PADZZ	40152	217099	..RING,RETAINING	2
11	PADZZ	12603	217164	..CLUTCH,POSITIVE	1
12	PADZZ	03504	217361	..RING,PISTON	1
13	PADZZ	12603	217411	..RING,PISTON	1
14	PADZZ	40152	243251	..RING,RETAINING	1
15	PADZZ	12603	217165	..WASHER,KEY	1
16	PADZZ	12603	664116	..RING,RETAINING	1
17	PADZZ	89881	230751	..BEARING,BALL,ANNULA	1
18	PFDZF	03504	217152	..CLUTCH DRUM ASSEMBL	1
19	PADZZ	12603	10J08	...BALL,BEARING	2
20	PFDZZ	12603	217155	...BUSHING,SLEEVE	1
21	XADZZ	89881	241436	...HUB & BLEED VALVE	1
22	PADZZ	12603	236982	..BEARING,ROLLER,CYLI	1
23	PADZZ	03504	223997	..RING,RETAINING	1
24	PADZZ	12603	223740	..RING,PISTON	2
25	PADZZ	40152	217605	..RING,RETAINING	1
26	PFDZZ	40152	239077	..GEAR CLUSTER,SPUR	1
27	PFDZZ	40152	239076	..GEAR,SPUR	1

END OF FIGURE

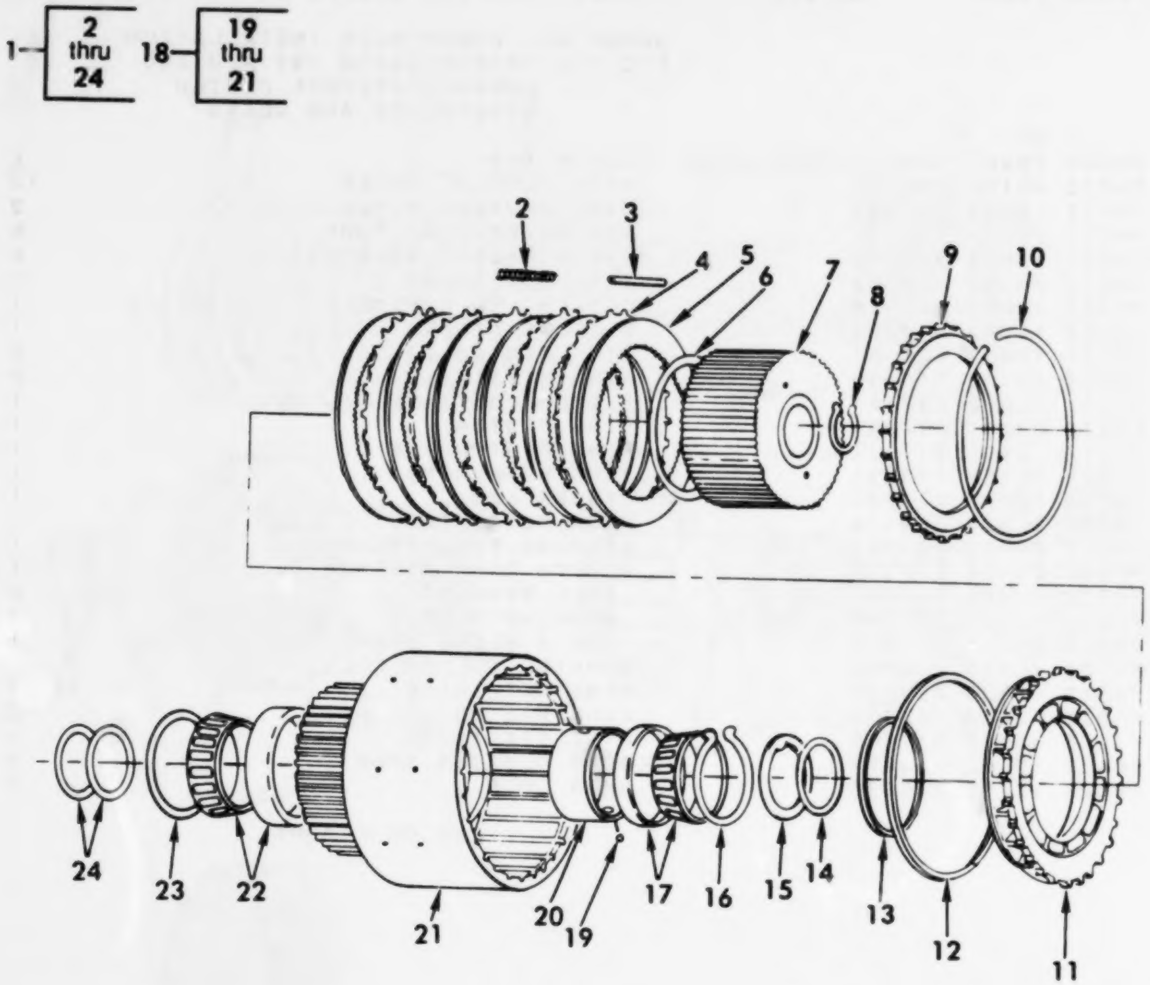

Figure 132. Transmission 3rd and 4th High/Low Clutch Assembly.

(1) ITEM NO	(2) SMR CODE	(3) CAGEC	(4) PART NUMBER	(5) DESCRIPTION AND USABLE ON CODES(UOC)	(6) QTY
				GROUP AU: POWERTRAIN INSTALLATION FIG.132 TRANSMISSION 3RD AND 4TH HIGH/LOW CLUTCH ASSEMBLY	
1	ADDDD	89881	3&4/H/L/CLUTCH	.CLUTCH ASSY	3
2	PADZZ	40152	217347	..SPRING,HELICAL,COMP	6
3	PADZZ	60380	16AH1876	..PIN,STRAIGHT,HEADLE	18
4	PADZZ	12603	232394	..DISK,CLUTCH	5
5	PADZZ	40152	232778	..DISK,CLUTCH	6
6	PADZZ	40152	217509	..RING,RETAINING	1
7	PFDZZ	40152	217148	..GEAR,SPUR	1
8	PADZZ	12603	246006	..RING,RETAINING	1
9	PADZZ	12603	217161	..DISK,CLUTCH	1
10	PADZZ	40152	217099	..RING,RETAINING	1
11	PADZZ	12603	217164	..CLUTCH,POSITIVE (PISTON)	1
12	PADZZ	03504	217361	..RING,PISTON	1
13	PADZZ	12603	217411	..RING,PISTON	1
14	PADZZ	96906	MS16624-1215	..RING,RETAINING	1
15	PADZZ	40152	217151	..WASHER,KEY	1
16	PADZZ	12603	223901	..RING RETAINING	1
17	PADZZ	38443	223358	..BEARING,BALL,ANNULA	3
18	PFDDD	40152	239073	..HUB,BODY	1
19	PADZZ	12603	10J08	...BALL,BEARING	3
20	PFDZZ	40152	240294	...BUSHING,SLEEVE	2
21	XADZZ	40152	241672	...HUB AND BLEED VALVE	1
22	PADZZ	43334	225795	..BEARING,ROLLER,CYLI	1
23	PADZZ	40152	223855	..RING,RETAINING	1
24	PADZZ	40152	240293	..RING,PISTON	2

END OF FIGURE

1— 2 thru 24   18— 19 thru 21

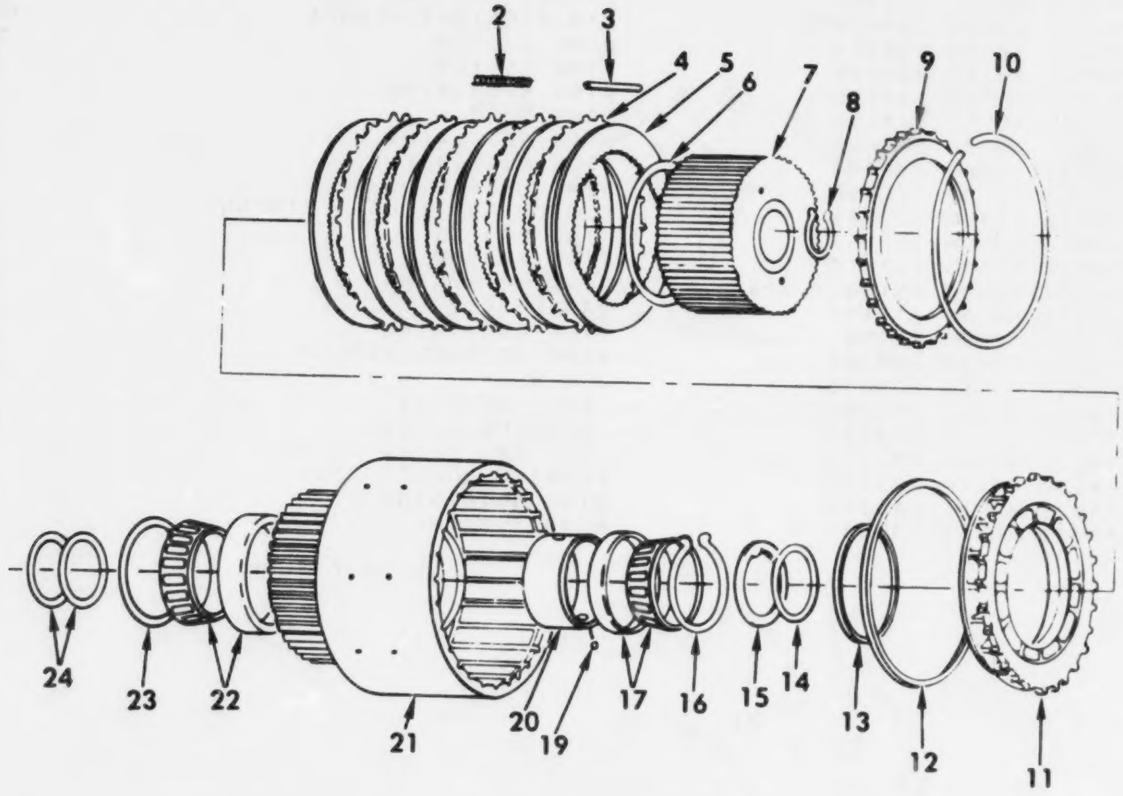

Figure 133. Transmission 5th and 6th Clutch Assembly.

(1) ITEM NO	(2) SMR CODE	(3) CAGEC	(4) PART NUMBER	(5) DESCRIPTION AND USABLE ON CODES(UOC)	(6) QTY
				GROUP AU: POWERTRAIN INSTALLATION FIG.133 TRANSMISSION 5TH AND 6TH CLUTCH ASSEMBLY	
1	ADDDD	89881	5&6CLUTCH	.CLUTCH ASSY	1
2	PADZZ	40152	217347	..SPRING,HELICAL,COMP	6
3	PADZZ	60380	16AH1876	..PIN,STRAIGHT,HEADLE	6
4	PADZZ	12603	232394	..DISK,CLUTCH	5
5	PADZZ	40152	232778	..DISK,CLUTCH	6
6	PADZZ	40152	217509	..RING,RETAINING	1
7	PFDZZ	40152	217148	..GEAR,SPUR	1
8	PADZZ	12603	246006	..RING,RETAINING	1
9	PADZZ	12603	217161	..DISK,CLUTCH	1
10	PADZZ	40152	217099	..RING,RETAINING	1
11	PADZZ	12603	217164	..CLUTCH,POSITIVE	1
12	PADZZ	03504	217361	..RING,PISTON OUTER	1
13	PADZZ	12603	217411	..RING,PISTON INNER	1
14	PADZZ	96906	MS16624-1215	..RING,RETAINING	1
15	PADZZ	40152	217151	..WASHER,KEY	1
16	PADZZ	12603	223901	..RING RETAINING	1
17	PADZZ	89881	223358	..BEARING,BALL,ANNULA	1
18	PFDZZ	40152	239084	..HUB,BODY	1
19	PADZZ	12603	10J08	...BALL,BEARING	1
20	PFDZZ	40152	240294	...BUSHING,SLEEVE	1
21	XADZZ	89881	241673	...HUB AND BLEED VALVE	1
22	PADZZ	89881	225795	..BEARING,ROLLER,CYLI	1
23	PADZZ	40152	223855	..RING,RETAINING	1
24	PADZZ	40152	240293	..RING,PISTON	2

END OF FIGURE

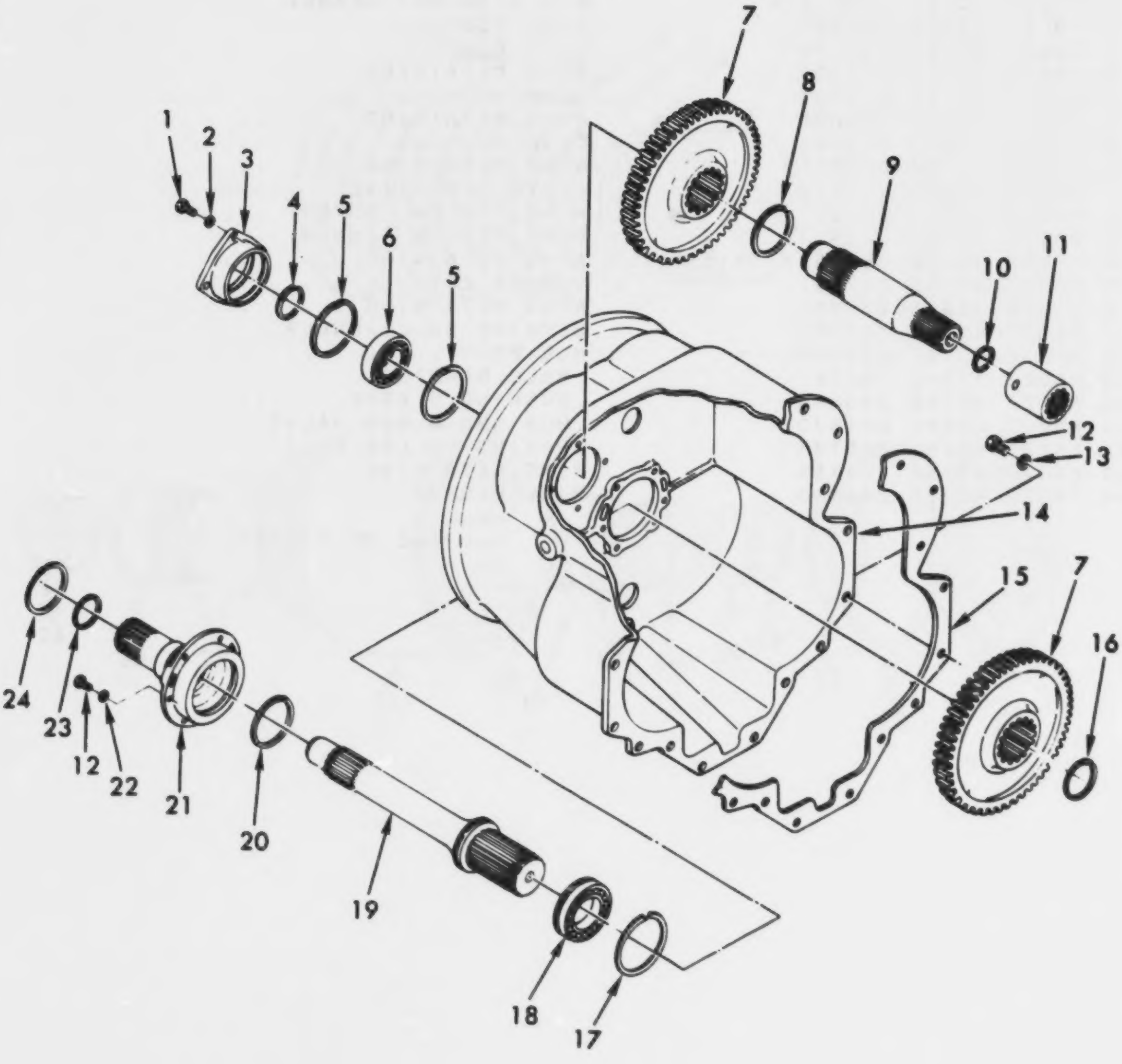

Figure 134. Transmission Torque Converter Shafts and Housing.

(1) ITEM NO	(2) SMR CODE	(3) CAGEC	(4) PART NUMBER	(5) DESCRIPTION AND USABLE ON CODES(UOC)	(6) QTY
				GROUP AU: POWERTRAIN INSTALLATION FIG.134 TRANSMISSION TORQUE CONVERTER SHAFTS AND HOUSING	
1	PADZZ	12603	1C724	.BOLT,MACHINE	4
2	PADZZ	96906	MS35338-47	.WASHER,LOCK	4
3	PFDZZ	40152	239088	.PLATE,RETAINING,BEA	1
4	PADZZ	12603	224083	.RING,RETAINING	1
5	PADZZ	96906	MS16625-1354	.RING,RETAINING	2
6	PADZZ	40152	225603	.BEARING,BALL,ANNULA	1
7	PFDZZ	40152	239089	.GEAR,SPUR	2
8	PADZZ	12603	224026	.RING,RETAINING	1
9	PFDZZ	77237	239085	.SHAFT,SHOULDERED	1
10	PADZZ	12603	755855	.SNAP RING	2
11	PFDZZ	40152	239086	.COUPLING,SHAFT,RIGI	1
12	PADZZ	96906	MS90728-114	.SCREW,CAP,HEXAGON H	24
13	PADZZ	95019	500357-13	.WASHER,LOCK	18
14	PFDZZ	12603	239049	.HOUSING,MECHANICAL	1
15	PADZZ	40152	239050	.GASKET	1
16	PADZZ	12603	224026	.RING,RETAINING	1
17	PADZZ	12603	214953	.RING RETAINING	1
18	PADZZ	38443	G310M-T9LR	.BEARING,BALL,ANNULA	1
19	PFDZZ	12603	214933	.SHAFT,SHOULDERED	1
20	PADZZ	12603	222079	.SEAL RING,METAL	1
21	PFDZZ	40152	237405	.STATOR SUPPORT,SLEE	1
22	PADZZ	12603	7E08	.WASHER,LOCK	6
23	PADZZ	40152	237242	.RING,PISTON	1
24	PADZZ	40152	237243	.RING,PISTON	1

END OF FIGURE

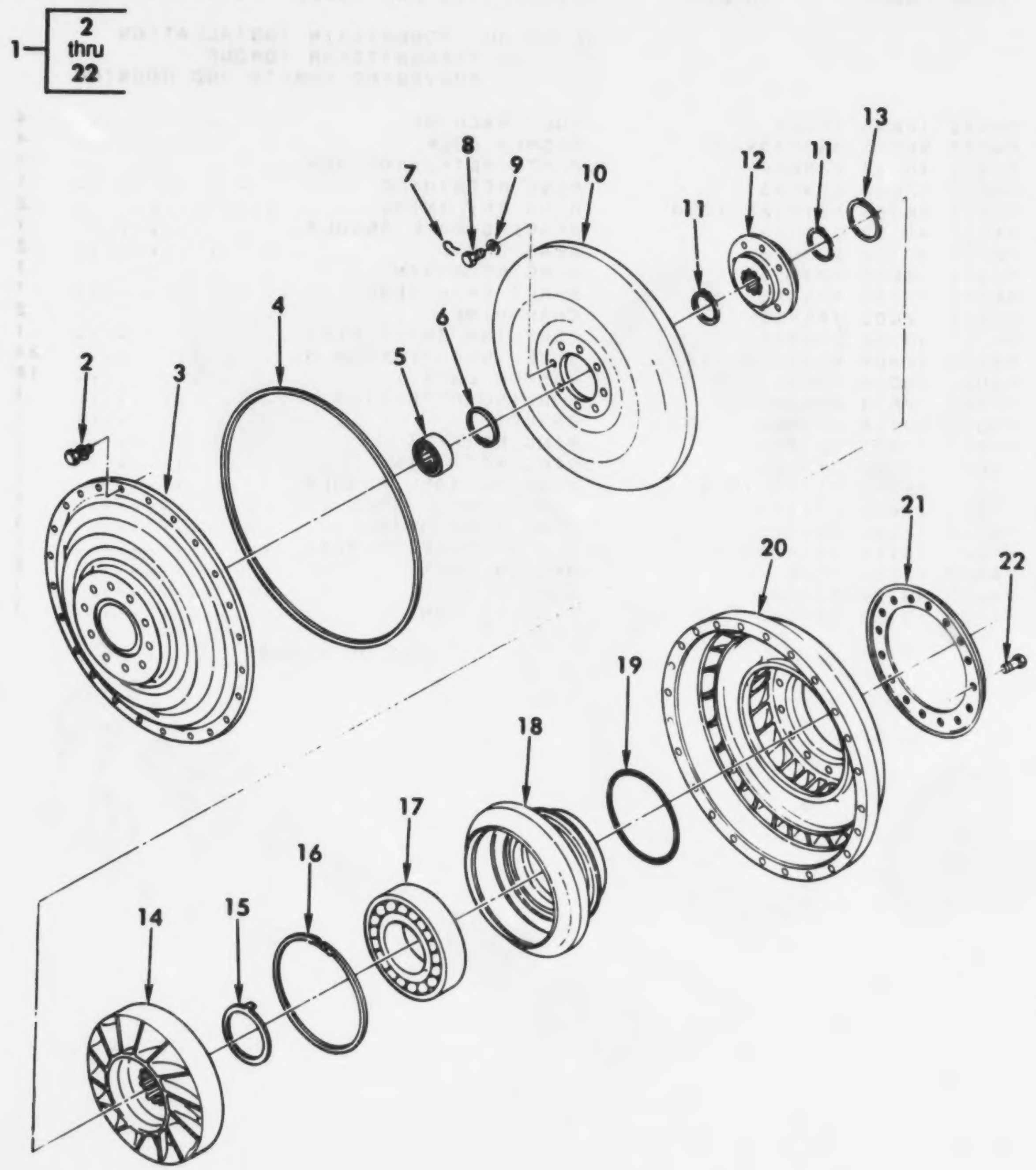

Figure 135. Transmission Torque Converter.

(1) ITEM NO	(2) SMR CODE	(3) CAGEC	(4) PART NUMBER	(5) DESCRIPTION AND USABLE ON CODES(UOC)	(6) QTY
				GROUP AU: POWERTRAIN INSTALLATION FIG.135 TRANSMISSION TORQUE CONVERTER	
1	ADDDD	40152	241695	.TORQUE CONVERTER..................	1
2	PADZZ	12603	5C620	..SCREW AND LOCKWASHE..............	24
3	PFDZZ	40152	239098	..COVER,ACCESS.....................	1
4	PADZZ	12603	232535	..PACKING,PREFORMED................	1
5	PADZZ	12603	214988	..BEARING,ROLLER,NEED..............	1
6	PADZZ	12603	666542	..RING,RETAINING...................	1
7	MDDZZ	96906	MS20995C47AR	..WIRE,NONELECTRICAL MAKE FROM NONELECTRICAL WIRE,P/N MS20995C47...	V
8	PADZZ	12603	209313	..SCREW,MACHINE....................	8
9	PADZZ	24446	N402P13C6	..WASHER,FLAT......................	8
10	PFDZZ	40152	219297	..IMPELLER,FAN,CENTRI..............	1
11	PADZZ	96906	MS16624-1156	..RING,RETAINING...................	2
12	PFDZZ	12603	214924	..HUB,TURBINE......................	1
13	PADZZ	96906	MS16624-1231	..RING,RETAINING...................	1
14	PFDZZ	40152	239644	..REACTION MEMBER,TOR..............	1
15	PADZZ	12603	229566	..SPACER,SPECIAL...................	1
16	PADZZ	40152	238705	..RING,RETAINING...................	1
17	PADZZ	38443	312S-T14	..BEARING,BALL,ANNULA..............	1
18	PBDZZ	40152	241650	..HUB,BODY.........................	1
19	PADZZ	96906	MS28775-261	..PACKING,PREFORMED................	1
20	PFDZZ	40152	239643	..IMPELLER,TORQ CONV...............	1
21	PADZZ	40152	237234	..RETAINER,PACKING.................	1
22	PADZZ	40152	237233	..BOLT,SELF-LOCKING................	12

END OF FIGURE

10—11

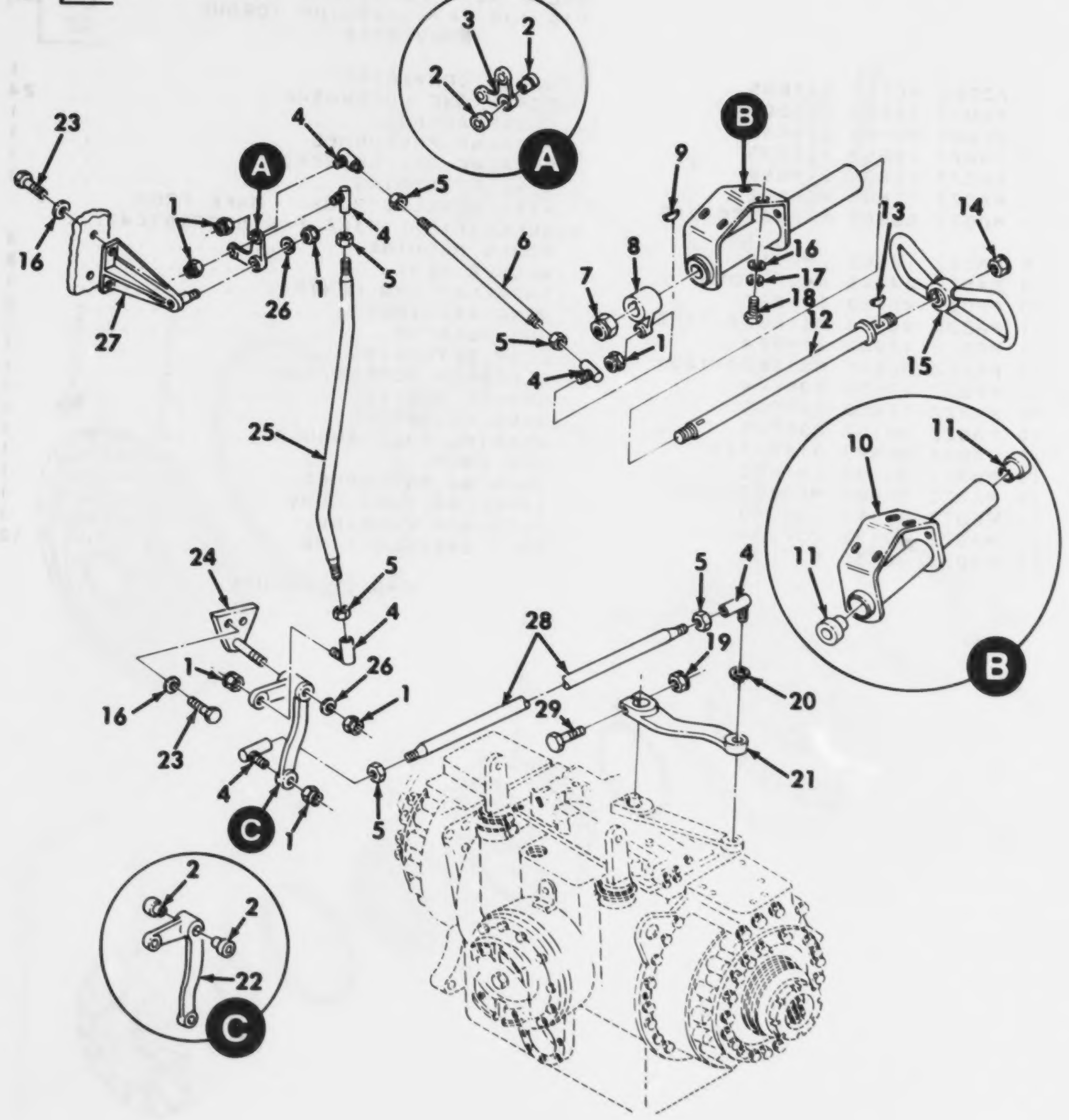

Figure 136. Steering Wheel and Linkage.

GROUP AU: POWERTRAIN INSTALLATION
FIG. 136 STEERING WHEEL AND LINKAGE

(1) ITEM NO	(2) SMR CODE	(3) CAGEC	(4) PART NUMBER	(5) DESCRIPTION AND USABLE ON CODES(UOC)	(6) QTY
1	PAOZZ	96906	MS21083N8	NUT,SELF-LOCKING,HE	7
2	PAOZZ	97403	13214E2644-2	BEARING,SLEEVE	4
3	PAOZZ	97403	13211E8977	BELL CRANK	1
4	PAOZZ	78643	R-111	BALL JOINT	6
5	PAOZZ	96906	MS35691-37	NUT,PLAIN,HEXAGON	6
6	PFOZZ	97403	13211E9351-4	ROD,THREADED END	1
7	PAOZZ	96906	MS17829-14C	NUT,SELF-LOCKING,HE	1
8	PAOZZ	97403	13211E8980	LEVER,REMOTE CONTRO	1
9	PAOZZ	96906	MS35756-17	KEY,WOODRUFF	1
10	PFOOO	97403	13211E8981	BRACKET,STEERING	1
11	PAOZZ	97403	13214E2644-3	BEARING,SLEEVE	2
12	PFOZZ	97403	13211E8982	SHAFT,SHOULDERED	1
13	PAOZZ	96906	MS35756-14	KEY,WOODRUFF	1
14	PAOZZ	96906	MS17829-12C	NUT,SELF-LOCKING,HE	1
15	PFOZZ	97403	13214E2777	STEERING WHEEL	1
16	PAOZZ	96906	MS27183-14	WASHER,FLAT	8
17	PAOZZ	96906	MS35338-46	WASHER,LOCK	4
18	PAOZZ	96906	MS90728-60	SCREW,CAP,HEXAGON H	4
19	PAOZZ	96906	MS17829-6C	NUT,SELF-LOCKING,HE	1
20	PAOZZ	96906	MS35338-48	WASHER,LOCK	1
21	PAOZZ	97403	13211E8972	LEVER,REMOTE CONTRO	1
22	PAOZZ	97403	13211E8974	BELL CRANK	1
23	PAOZZ	96906	MS90728-62L	BOLT,SELF-LOCKING	4
24	PFOZZ	19207	12332161	BRACKET,EYE,NONROTA	1
25	PAOZZ	97403	13211E8976	ROD,THREADED END	1
26	PAOZZ	96906	MS27183-18	WASHER,FLAT	2
27	PFOZZ	19207	12332159	BRACKET,MOUNTING	1
28	PAOZZ	97403	13211E8973	ROD,THREADED END	1
29	PAOZZ	96906	MS90728-66	SCREW,CAP,HEXAGON H	1

END OF FIGURE

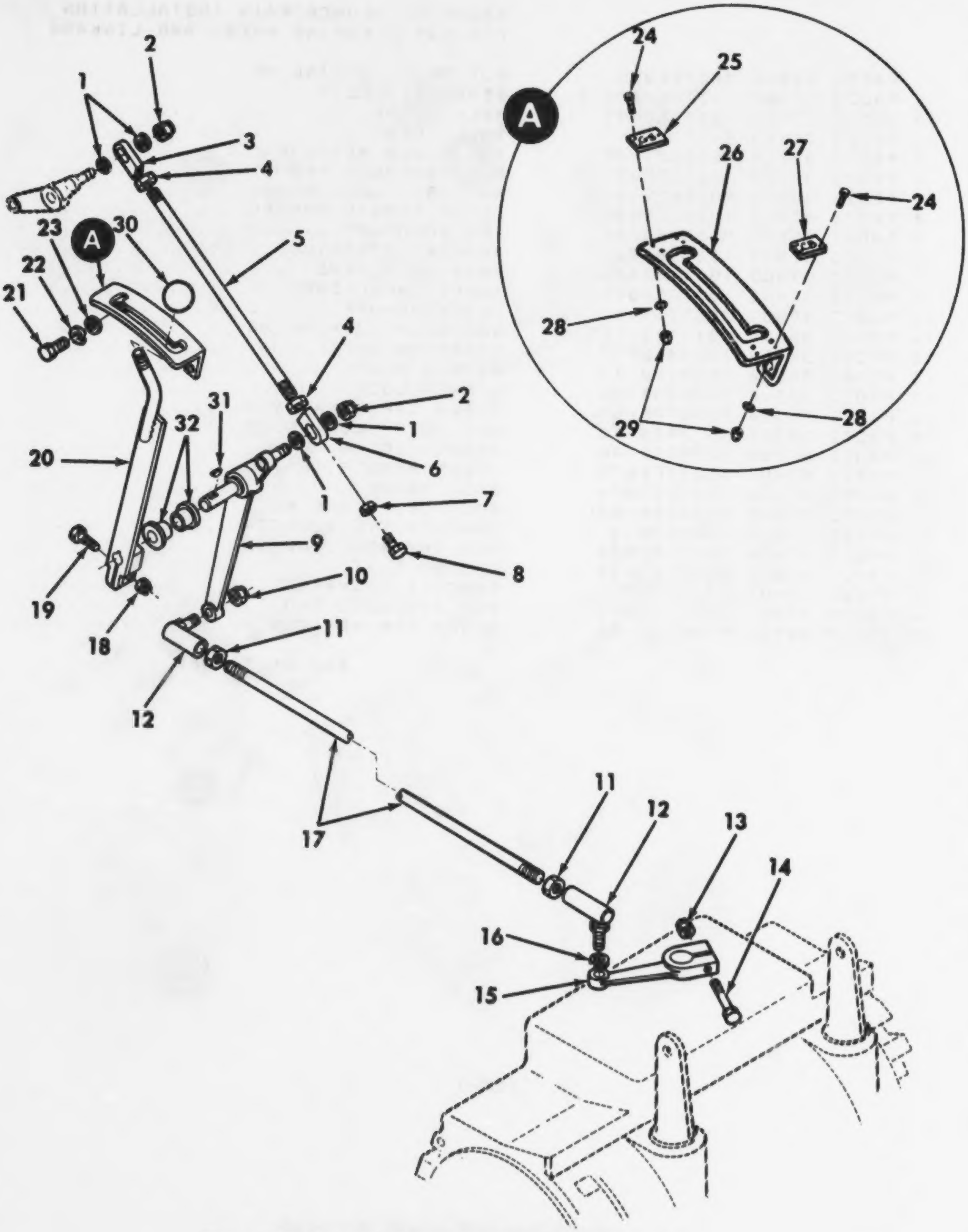

Figure 137. Steering Selector Lever, Linkage, and Data Plates.

(1) ITEM NO	(2) SMR CODE	(3) CAGEC	(4) PART NUMBER	(5) DESCRIPTION AND USABLE ON CODES(UOC)	(6) QTY
				GROUP AU: POWERTRAIN INSTALLATION FIG.137 STEERING SELECTOR LEVER, LINKAGE, AND DATA PLATES	
1	PAOZZ	96906	MS27183-12	WASHER,FLAT	4
2	PAOZZ	96906	MS21083N4	NUT,SELF-LOCKING,HE	2
3	PAOZZ	19207	12357432	POST.ELECTRICAL-MEC	1
4	PAOZZ	96906	MS35691-17	NUT,PLAIN,HEXAGON	2
5	PFOZZ	97403	13211E9350	ROD,THREADED END	1
6	PAOZZ	19207	12357431	POST,ELECTRICAL-MEC	1
7	PAOZZ	96906	MS35691-13	NUT,PLAIN,HEXAGON	1
8	PAOZZ	96906	MS90726-34	SCREW,CAP,HEXAGON H	1
9	PAOZZ	19207	12362035	BELL CRANK	1
10	PAOZZ	96906	MS21083N8	NUT,SELF-LOCKING,HE	1
11	PAOZZ	96906	MS35691-37	NUT.PLAIN,HEXAGON	2
12	PAOZZ	78643	R-111	BALL JOINT	2
13	PAOZZ	96906	MS17829-6C	NUT,SELF-LOCKING,HE	1
14	PAOZZ	96906	MS90725-68	SCREW,CAP,HEXAGON H	1
15	PFOZZ	97403	13211E9356	LEVER,REMOTE CONTRO	1
16	PAOZZ	96906	MS35338-48	WASHER,LOCK	1
17	PFOZZ	97403	13211E9351-1	ROD,THREADED END	1
18	PAOZZ	96906	MS21083N5	NUT,SELF-LOCKING,HE	1
19	PAOZZ	96906	MS90726-33	SCREW,CAP,HEXAGON H	1
20	PFOZZ	97403	13211E9358	LEVER,MANUAL CONTRO	1
21	PAOZZ	96906	MS90728-60	SCREW,CAP,HEXAGON H	2
22	PAOZZ	96906	MS35338-46	WASHER,LOCK	2
23	PAOZZ	96906	MS27183-14	WASHER,FLAT	2
24	PAOZZ	96906	MS35206-245	SCREW,MACHINE	8
25	PFOZZ	19207	12325752	PLATE,DESIGNATION	1
26	PFOZZ	19207	12362036	PLATE,SHIFT	1
27	PFOZZ	19207	12325753	PLATE,DESIGNATION	1
28	PAOZZ	96906	MS35335-31	WASHER,LOCK	8
29	PAOZZ	96906	MS35649-282	NUT,PLAIN,HEXAGON	8
30	PAOZZ	72512	55M	KNOB	1
31	PAOZZ	96906	MS35756-6	KEY,WOODRUFF	1
32	PAOZZ	97403	13214E2644-1	BEARING,SLEEVE	2

END OF FIGURE

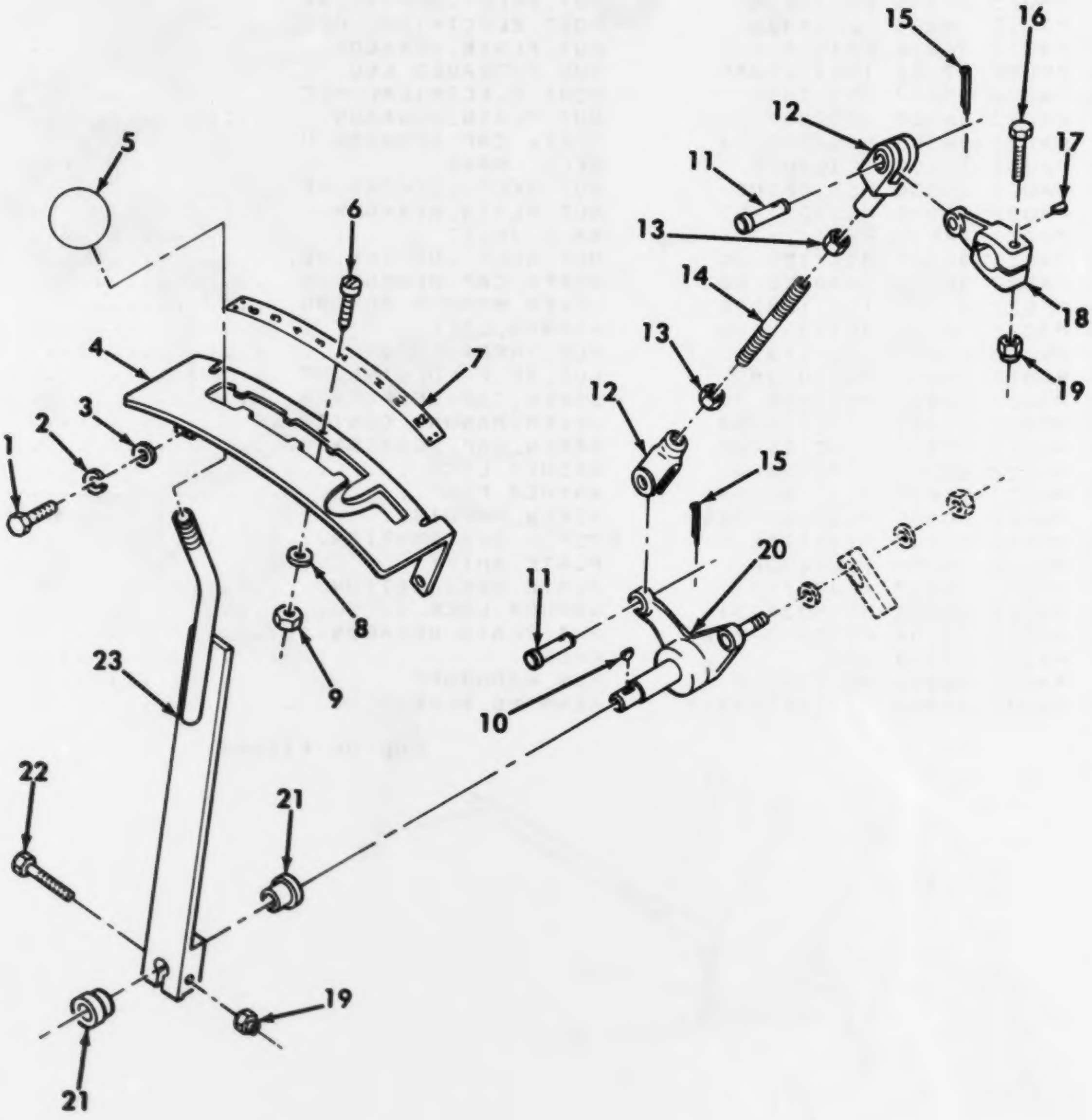

Figure 138. Shifting Lever and Linkage.

(1) ITEM NO	(2) SMR CODE	(3) CAGEC	(4) PART NUMBER	(5) DESCRIPTION AND USABLE ON CODES(UOC)	(6) QTY
				GROUP AU: POWERTRAIN INSTALLATION FIG.138 SHIFTING LEVER AND LINKAGE	
1	PAOZZ	96906	MS90728-58L	SCREW,CAP,HEXAGON H................	2
2	PAOZZ	96906	MS35338-46	WASHER,LOCK........................	2
3	PAOZZ	96906	MS27183-14	WASHER,FLAT........................	2
4	PFOZZ	19207	12355565	DETENT PLATE.......................	1
5	PAOZZ	72512	55M	KNOB...............................	1
6	PAOZZ	96906	MS35206-245	SCREW,MACHINE......................	6
7	PFOZZ	19207	12325751	PLATE,DESIGNATION..................	1
8	PAOZZ	96906	MS35335-31	WASHER,LOCK........................	6
9	PAOZZ	96906	MS35649-282	NUT,PLAIN,HEXAGON..................	6
10	PAOZZ	96906	MS35756-6	KEY,WOODRUFF.......................	1
11	PAOZZ	96906	MS35810-4	PIN,STRAIGHT,HEADED................	2
12	PAOZZ	96906	MS35812-4	CLEVIS,ROD END.....................	2
13	PAOZZ	96906	MS35691-21	NUT,PLAIN,HEXAGON..................	2
14	PFOZZ	97403	13214E2468	STUD,PLAIN.........................	1
15	PAOZZ	96906	MS24665-281	PIN,COTTER.........................	2
16	PAOZZ	96906	MS90726-40	SCREW,CAP,HEAGON H.................	1
17	PAOZZ	96906	MS35756-12	KEY,WOODRUFF.......................	1
18	PFOZZ	97403	13214E2397	LEVER,MANUAL CONTRO................	1
19	PAOZZ	96906	MS21083N5	NUT,SELF-LOCKING,HE................	2
20	PAOZZ	19207	12355395	BELLCRANK,TRANSMI..................	1
21	PAOZZ	97403	13214E2644-1	BEARING,SLEEVE.....................	2
22	PAOZZ	96906	MS90726-33	SCREW,CAP,HEXAGON H................	1
23	PFOZZ	97403	13211E9358	LEVER,MANUAL CONTRO................	1

END OF FIGURE

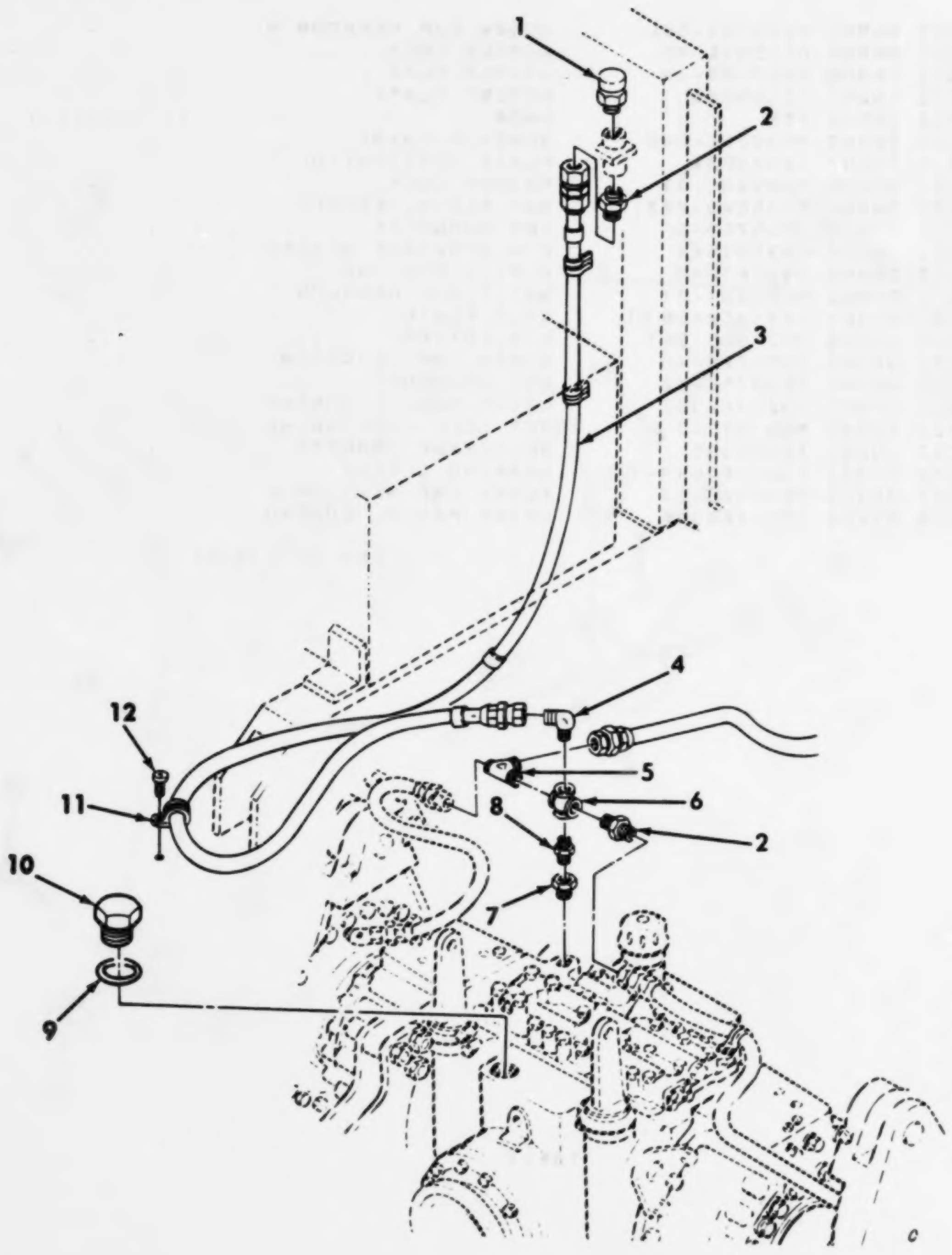

Figure 139. Steer Unit Breather, Lines, and Fittings.

GROUP AU: POWERTRAIN INSTALLATION
FIG. 139 STEER UNIT BREATHER, LINES, AND FITTINGS

(1) ITEM NO	(2) SMR CODE	(3) CAGEC	(4) PART NUMBER	(5) DESCRIPTION AND USABLE ON CODES(UOC)	(6) QTY
1	PAOZZ	90005	569020-01	BREATHER	1
2	PAOZZ	96906	MS51500A6	ADAPTER,STRAIGHT,PI	2
3	PAOZZ	19207	12357157	HOSE ASSEMBLY,NONME	1
4	PAOZZ	96906	MS51504A6	ELBOW,PIPE TO TUBE	1
5	PAOZZ	96906	MS51511A6	TEE,PIPE TO TUBE	1
6	PAOZZ	97403	13214E2258	CROSS,PIPE	1
7	PAOZZ	81348	WW-P-471BDOBCDB	BUSHING,PIPE	1
8	PAOZZ	96906	MS51953-25	NIPPLE,PIPE	1
9	PAOZZ	96906	MS28778-16	PACKING,PREFORMED	1
10	PAOZZ	96906	MS51840-30	PLUG,MACHINE THREAD	1
11	PAOZZ	96906	MS21333-73	CLAMP,LOOP	1
12	PAOZZ	96906	MS51861-46	SCREW,TAPPING,THREA	1

END OF FIGURE

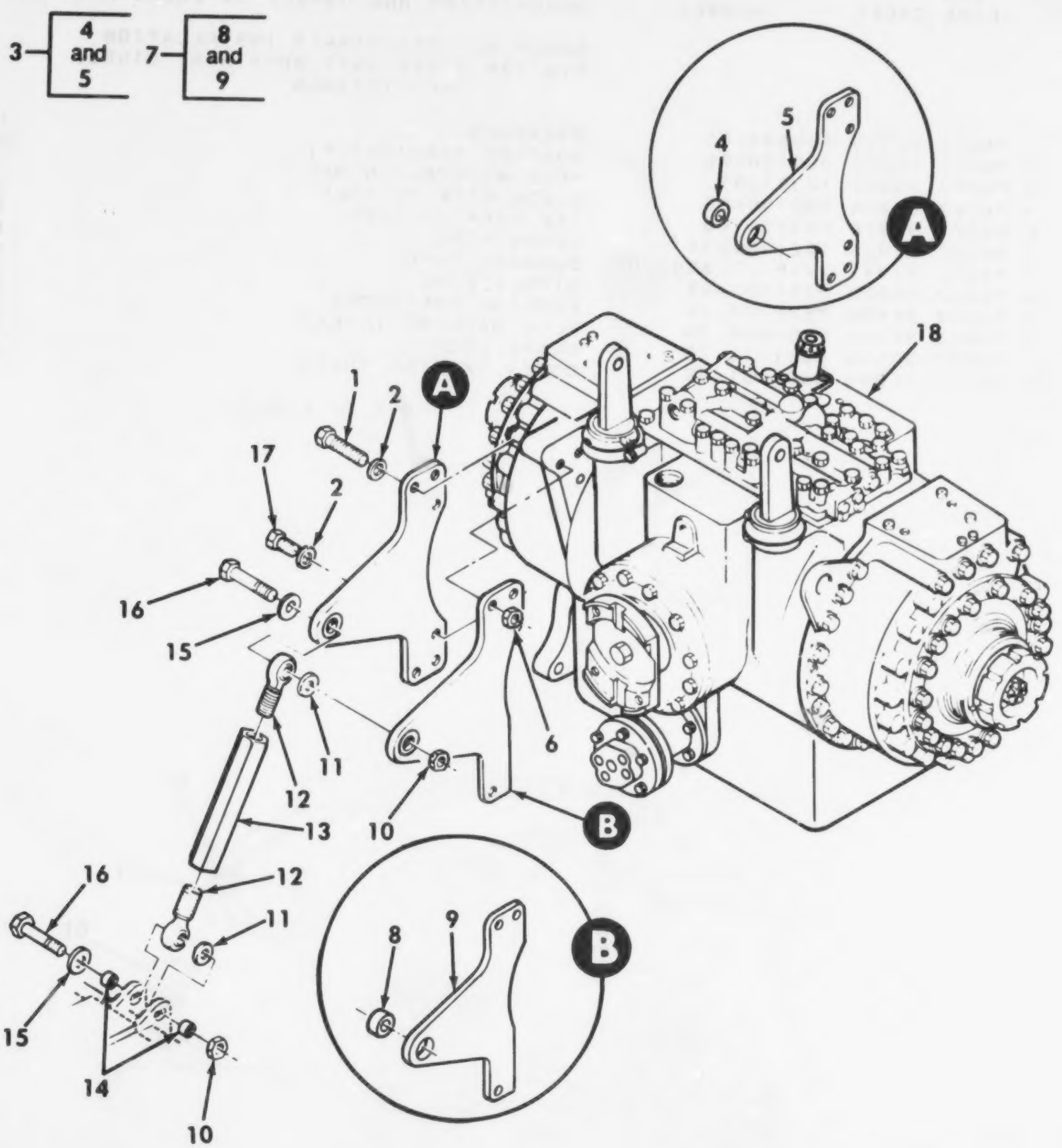

Figure 140. Steer Unit and Mounting Parts.

(1) ITEM NO	(2) SMR CODE	(3) CAGEC	(4) PART NUMBER	(5) DESCRIPTION AND USABLE ON CODES(UOC)	(6) QTY
				GROUP AU: POWERTRAIN INSTALLATION FIG.140 STEER UNIT AND MOUNTING PARTS	
1	PAFZZ	19207	12331896	BOLT,SELF-LOCKING..................	4
2	PAFZZ	96906	MS27183-21	WASHER,FLAT........................	6
3	PBFFF	97403	13211E9118	PLATE,TORQUE ARM...................	1
4	PAOZZ	97403	13211E9103	.BUSHING,SLEEVE....................	1
5	XAFZZ	19207	12334986	.PLATE.............................	1
6	PAFZZ	96906	MS51967-20	NUT,PLAIN,HEXAGON..................	4
7	PBFFF	97403	13211E9521	BRACKET,TORQUE ARM.................	1
8	PAOZZ	97403	13211E9103	.BUSHING,SLEEVE....................	1
9	XAFZZ	19207	12335005	.PLATE.............................	1
10	PAOZZ	96906	MS51968-26	NUT,PLAIN,HEXAGON..................	2
11	PFOZZ	97403	13211E9485	SPACER,SLEEVE......................	2
12	PAOZZ	77998	DREM-14	BEARING,PLAIN,ROD E................	2
13	PAOZZ	97403	13211E9450	TURNBUCKLE.........................	1
14	PAOZZ	97403	13211E9103	BUSHING,SLEEVE.....................	2
15	PAOZZ	96906	MS27183-25	WASHER,FLAT........................	2
16	PAOZZ	19207	12334934	BOLT,SELF-LOCKING..................	2
17	PAFZZ	96906	MS90728-163L	BOLT,SELF-LOCKING..................	2
18	PAFDD	97403	13215E6600	STEERING UNIT ASSY.................	1

END OF FIGURE

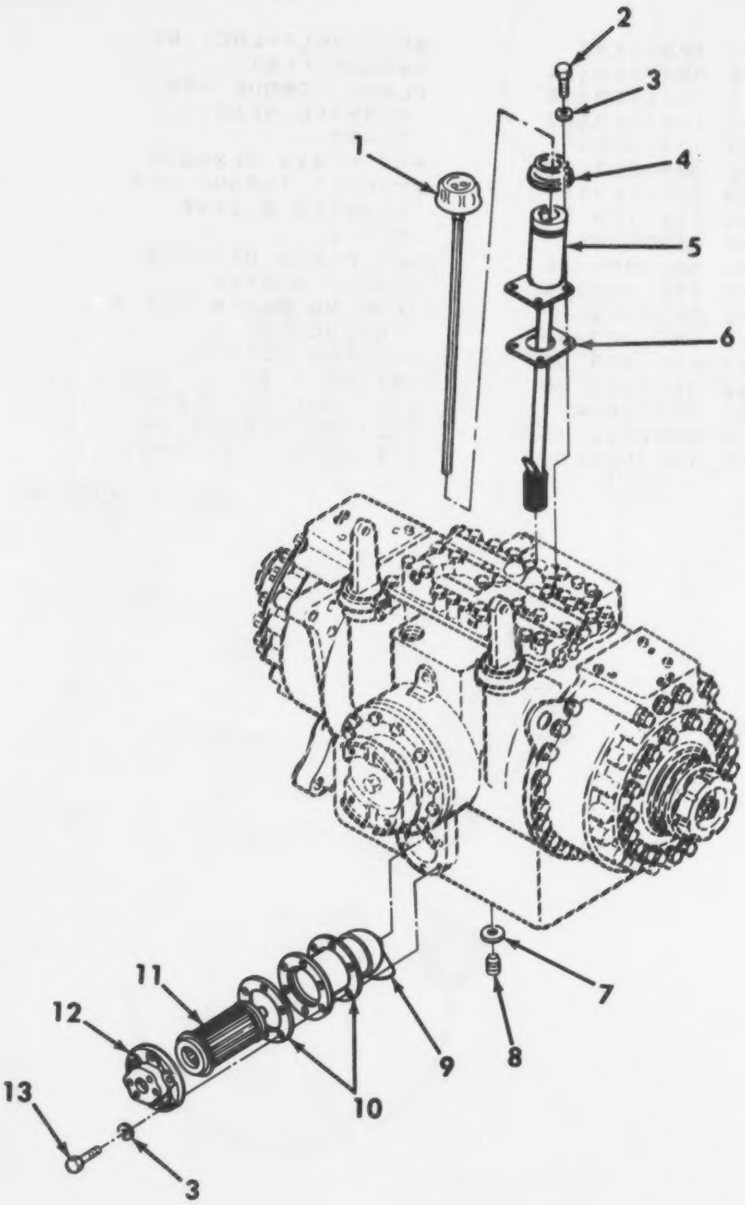

Figure 141. Steer Unit Filler Neck and Strainer.

(1) ITEM NO	(2) SMR CODE	(3) CAGEC	(4) PART NUMBER	(5) DESCRIPTION AND USABLE ON CODES(UOC)	(6) QTY
				GROUP AU: POWERTRAIN INSTALLATION FIG.141 STEER UNIT FILLER NECK AND STRAINER	
1	PAOZZ	19207	12352519	.GAGE ROD-CAP,LIQUID................	1
2	PAOZZ	96906	MS90728-59	.SCREW,CAP,HEXAGON H................	4
3	PAOZZ	96906	MS35338-46	.WASHER,LOCK........................	410
4	PAOZZ	19207	7708123	.SEAL,NONMETALLIC AN................	1
5	PFOZZ	19207	12352520	.FILLER NECK ASSY...................	1
6	PAOZZ	19207	8350176	.GASKET.............................	1
7	PAOZZ	96906	MS35769-21	.GASKET.............................	1
8	PAOZZ	19207	7376357	.PLUG,MACHINE THREAD................	1
9	PFFZZ	00736	R9W1302-156	.STRAINER BODY,SEDIM................	1
10	PAFZZ	97403	13215E6649	.GASKET.............................	2
11	PAFZZ	00736	R9W1302-826	.STRAINER,SEDIMENT..................	1
12	PFFZZ	97403	13214E2634	.COVER,ACCESS.......................	1
13	PAFZZ	96906	MS90728-64	.SCREW,CAP,HEXAGON H................	6

END OF FIGURE

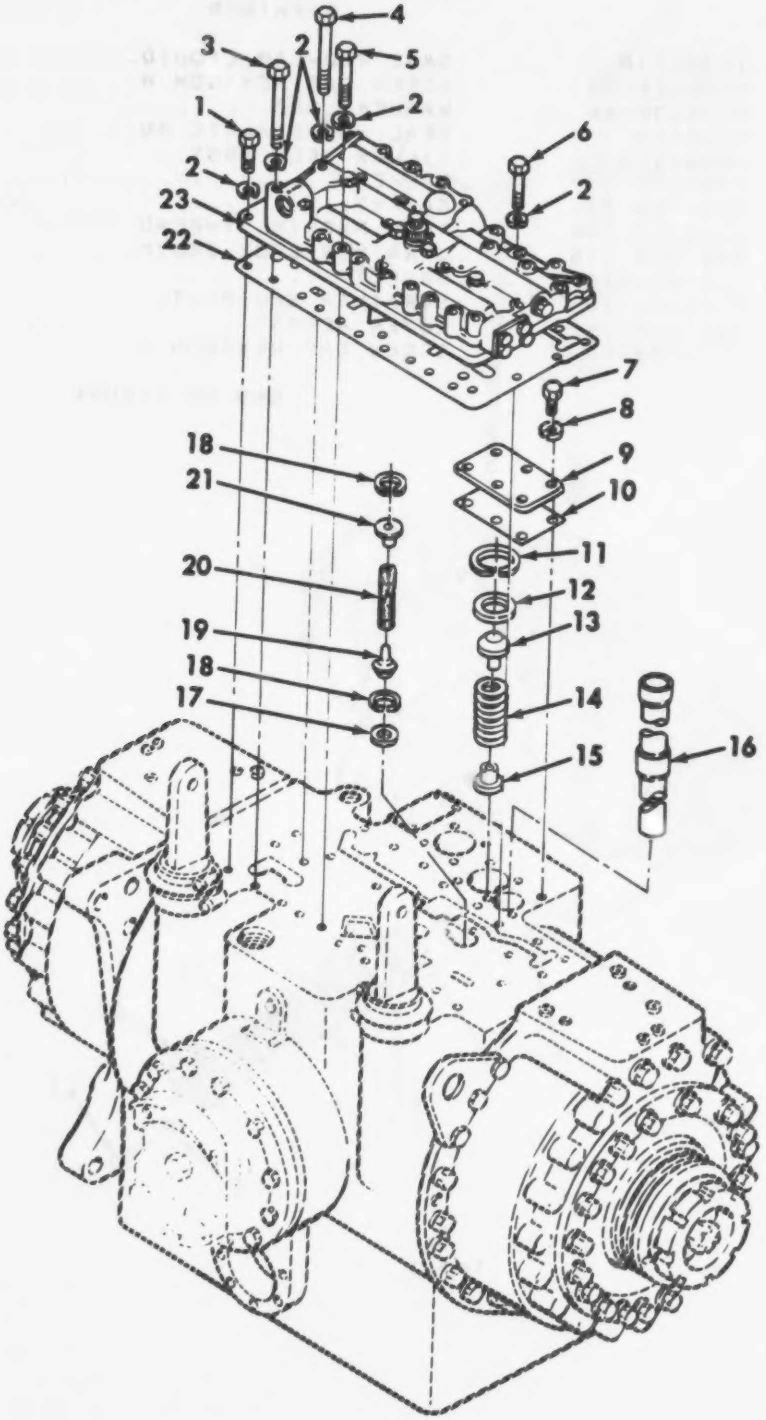

Figure 142. Steer Unit Valves and Related Parts.

(1) ITEM NO	(2) SMR CODE	(3) CAGEC	(4) PART NUMBER	(5) DESCRIPTION AND USABLE ON CODES(UOC)	(6) QTY
				GROUP AU: POWERTRAIN INSTALLATION FIG. 142 STEER UNIT VALVES AND RELATED PARTS	
1	PADZZ	96906	MS90728-38L	.BOLT,SELF-LOCKING	3
2	PADZZ	96906	MS27183-12	.WASHER,FLAT	31
3	PADZZ	96906	MS90728-50L	.BOLT,SELF-LOCKING	2
4	PADZZ	96906	MS90728-49L	.BOLT,SELF-LOCKING	1
5	PADZZ	96906	MS90728-44L	.BOLT,SELF-LOCKING	21
6	PADZZ	96906	MS90728-41L	.BOLT,SELF-LOCKING	4
7	PADZZ	96906	MS90728-34	.SCREW,CAP,HEXAGON H	6
8	PADZZ	96906	MS35338-45	.WASHER,LOCK	6
9	PFDZZ	97403	13215E6708	.COVER,ACCESS	1
10	PADZZ	97403	13215E6707	.GASKET	1
11	PADZZ	97403	13215E6598-4	.RING,RETAINING	1
12	PADZZ	97403	13215E6706	.SEAT,VALVE	1
13	PADZZ	19207	8352006	.VALVE,LUBE REGULATO	1
14	PADZZ	97403	13215E6704	.SPRING,HELICAL,COMP	1
15	PFDZZ	19207	8352005	.BEARING,SLEEVE	1
16	PFDZZ	97403	13215E6702	.TUBE,METALLIC	1
17	PADZZ	97403	13215E6696	.SEAT,VALVE	1
18	PADZZ	19207	8349689	.RING,RETAINING	2
19	PADZZ	19207	8348050	.VALVE,LUBE REGULATO	1
20	PADZZ	97403	13215E6711	.SPRING,HELICAL,COMP	1
21	PFDZZ	19207	8347311	.BUSHING,SLEEVE	1
22	PADZZ	97403	13215E6686	.GASKET	1
23	PADDD	97403	13215E6540	.CONTROL VALVE STEERING	1

END OF FIGURE

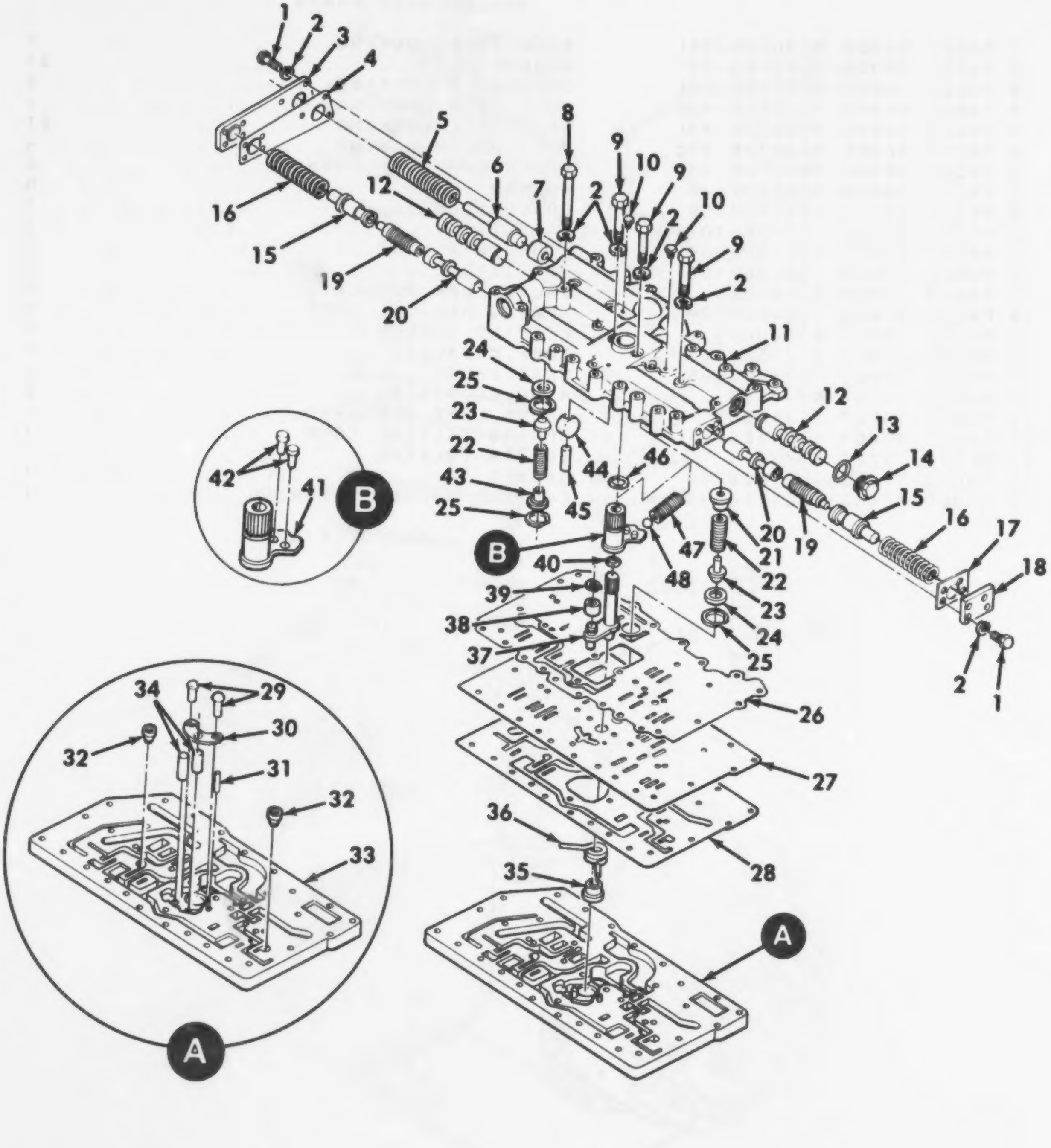

Figure 143. Steer Unit Control Valve Assembly.

GROUP AU: POWERTRAIN INSTALLATION
FIG. 143 STEER UNIT CONTROL VALVE ASSEMBLY

(1) ITEM NO	(2) SMR CODE	(3) CAGEC	(4) PART NUMBER	(5) DESCRIPTION AND USABLE ON CODES(UOC)	(6) QTY
1	PADZZ	96906	MS90728-34L	..BOLT,SELF-LOCKING................	11
2	PADZZ	96906	MS35338-45	..WASHER,LOCK......................	15
3	PFDZZ	97403	13215E6545	..COVER,ACCESS VALVE,STEERING CONTROL............................	1
4	PADZZ	97403	13215E6544	..GASKET VALVE COVER,STEERING CONTROL............................	1
5	PADZZ	97403	13215E6691	..SPRING,HELICAL,COMP..............	1
6	PADZZ	97403	13215E6690	..ROD,CONTROL,VALVE VALVE REGULATOR,STEERING..................	1
7	PADZZ	97403	13215E6692	..PLUG,REGULATOR VALVE,STEERING CONTROL............................	1
8	PADZZ	96906	MS90728-46L	..BOLT,SELF-LOCKING................	1
9	PADZZ	96906	MS90728-41L	..BOLT,SELF-LOCKING................	3
10	PADZZ	97403	13218E0122-11	..PLUG,PIPE........................	2
11	XADZZ	97403	13215E6563	..BODY.............................	1
12	PADZZ	97403	13215E6548	..SLIDE,REGULATOR HYD HYDRAULIC SELECTOR,VALVE STEERING CONTROL.....	2
13	PADZZ	96906	MS35769-21	..GASKET...........................	1
14	PFDZZ	19207	7708979	..PLUG,MACHINE THREAD..............	1
15	PADZZ	97403	13215E6542	..SLIDE,REGULATOR HYD HYDRAULIC SELECTOR VALVE,STEERING CONTROL.....	2
16	PADZZ	19207	8351458	..SPRING,HELICAL,COMP..............	2
17	PADZZ	19207	8351437	..GASKET VALVE COVER,STEERING CONTROL............................	1
18	PFDZZ	19207	8351801	..COVER,ACCESS VALVE,STEERING CONTROL............................	1
19	PADZZ	97403	13215E6590	..RETAINER,HELICAL CO SPRING, STEERING CONTROL...................	2
20	PADZZ	97403	13215E6543	..SLIDE,REGULATOR HYD HYDRAULIC SELECTOR VALVE,STEERING CONTROL.....	2
21	PADZZ	97403	13215E6693	..GUIDE,VALVE STEM CHECK VALVE, STEERING CONTROL...................	1
22	PADZZ	97403	13215E6694	..SPRING,HELICAL,COMP..............	2
23	PADZZ	97403	13215E6695	..VALVE,STOP-CHECK STEERING CONTROL	2
24	PADZZ	97403	13215E6696	..SEAT,VALVE CHECK VALVE,STEERING CONTROL............................	2
25	PADZZ	19207	8349689	..RING,RETAINING...................	3
26	PADZZ	97403	13215E6566	..GASKET VALVE BODY,STEERING CONTROL............................	1
27	XADZZ	97403	13215E6567	..PLATE SEPARATOR,STEERING CONTROL.	1
28	PADZZ	97403	13215E6565	..GASKET SEPARATOR PLATE,STEERING CONTROL............................	1
29	PADZZ	96906	MS21318-21	..SCREW,DRIVE......................	2
30	XADZZ	97403	13215E6569	..PLATE SPRING RETAINING,STEERING CONTROL............................	1
31	PADZZ	19207	12331940	..PIN,STRAIGHT,HEADLE..............	1
32	PADZZ	97403	13215E6580	..VALVE,CHECK,ASSEMBL..............	2
33	XADZZ	97403	13215E6568	..PLATE OIL TRANSFER,STEERING	1

(1) ITEM NO	(2) SMR CODE	(3) CAGEC	(4) PART NUMBER	(5) DESCRIPTION AND USABLE ON CODES(UOC)	(6) QTY
				CONTROL..............................	
34	PADZZ	19207	12331941	..PIN,STRAIGHT,HEADLE................	2
35	PADZZ	97403	13215E6557	..BUSHING,SLEEVE TORSION SPRING, STEERING CONTROL......................	1
36	PADZZ	97403	13215E6551	..SPRING,HELICAL,TORS................	1
37	PADZZ	97403	13215E6550	..LEVER,REMOTE CONTRO STEERING.....	1
38	PADZZ	19207	8351424	..BEARING,SLEEVE LEVER,STEERING CONTROL..............................	1
39	PADZZ	96906	MS16624-1043	..RING,RETAINING.....................	1
40	PADZZ	96906	MS28775-111	..PACKING,PREFORMED..................	1
41	PADZZ	97403	13215E6560	..LEVER,REMOTE CONTRO................	1
42	PADZZ	19207	12331946	...PIN,STRAIGHT,HEADED...............	2
43	PADZZ	19207	8347311	..GUIDE,LUBE REGULATO LUBE, REGULATOR VALVE........................	1
44	XADZZ	97403	13215E6725	..PLUG...............................	1
45	PADZZ	96906	MS171537	..PIN,SPRING.........................	1
46	PADZZ	96906	MS28775-210	..PACKING,PREFORMED..................	1
47	PADZZ	19207	8351432	..SPRING,HELICAL,COMP................	1
48	PADZZ	96906	MS19061-20015	..BALL,BEARING.......................	1

END OF FIGURE

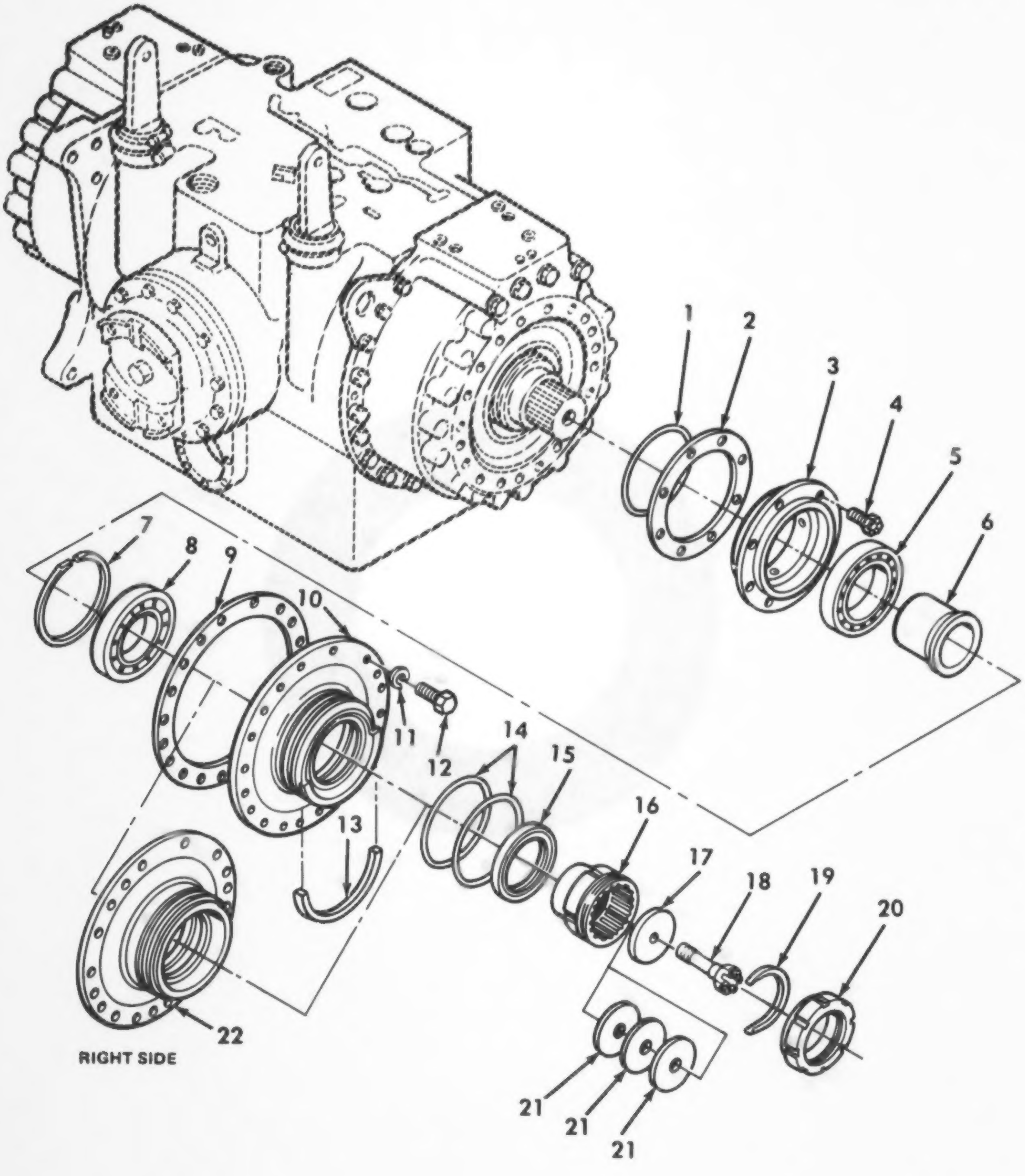

Figure 144. Steer Unit Final Drive Couplings and End Covers.

(1) ITEM NO	(2) SMR CODE	(3) CAGEC	(4) PART NUMBER	(5) DESCRIPTION AND USABLE ON CODES(UOC)	(6) QTY
				GROUP AU: POWERTRAIN INSTALLATION FIG.144 STEER UNIT FINAL DRIVE COUPLINGS AND END COVERS	
1	PADZZ	96906	MS28775-259	.PACKING,PREFORMED..................	2
2	PADZZ	19207	8351929	.GASKET.............................	2
3	PADZZ	19207	8351925	.HOUSING,MECHANICAL.................	2
4	PADZZ	97403	13215E6591-2	.SCREW,CAP,HEXAGON H................	16
5	PADZZ	52676	6020J/C3	.BEARING,BALL,ANNULA................	2
6	PADZZ	19207	8351572	.SPACER,SLEEVE......................	2
7	PADZZ	19207	8351583	.RING,RETAINING.....................	2
8	PADZZ	52676	6217J/C3	.BEARING,BALL,ANNULA................	2
9	PADZZ	19207	8351676	.GASKET.............................	2
10	PFDZZ	97403	13215E6601	.COVER,ACCESS.......................	1
11	PADZZ	96906	MS35338-47	.WASHER,LOCK........................	38
12	PADZZ	96906	MS90728-68	.SCREW,CAP,HEXAGON H................	38
13	PAFZZ	19207	8351618	.RING, HALF, ALIGNME................	1
14	PAFZZ	96906	MS28775-258	.PACKING,PREFORMED..................	4
15	PAFZZ	19207	8351582	.SEAL,TRANSMISSION..................	2
16	PAFZZ	19207	8351567	.COUPLING,OUTPUT DRI................	2
17	PAFZZ	19207	8351609	.LOCK PLATE,COUPLING................	2
18	PAFZZ	19207	12379441	.BOLT,SELF-LOCKING..................	2
19	PAOZZ	19207	8351568	.RING,RETAINING.....................	2
20	PAOZZ	19207	8351573	.NUT,PLAIN,ROUND....................	2
21	PAFZZ	19207	12379444-3	.SHIM .016..........................	V
21	PAFZZ	19207	12379444-1	.SHIM .010..........................	V
21	PAFZZ	19207	12379444-2	.SHIM .012..........................	V
22	PFDZZ	97403	13215E6602	.COVER,ACCESS.......................	1

END OF FIGURE

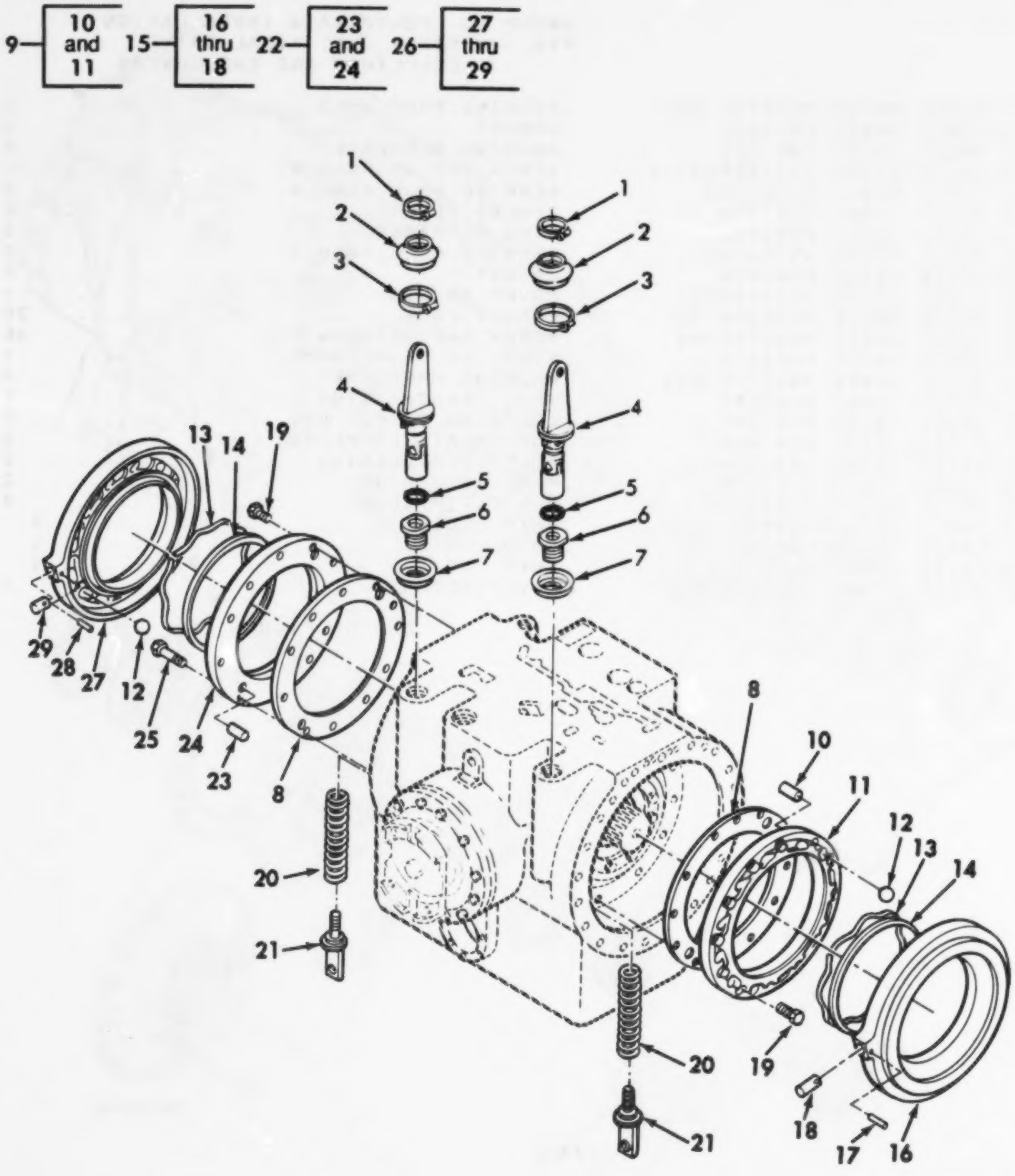

Figure 145. Steer Unit Brake Levers and Related Parts.

(1) ITEM NO	(2) SMR CODE	(3) CAGEC	(4) PART NUMBER	(5) DESCRIPTION AND USABLE ON CODES(UOC)	(6) QTY
				GROUP AU: POWERTRAIN INSTALLATION FIG.145 STEER UNIT BRAKE LEVERS AND RELATED PARTS	
1	PAOZZ	96906	MS35842-13	.CLAMP,HOSE	2
2	PAOZZ	97403	13215E6726	.BELLOWS,PROTECTION	2
3	PAOZZ	96906	MS35842-14	.CLAMP,HOSE	2
4	PAOZZ	19207	12379435	.CONNECTING LINK,RIG	2
5	PAOZZ	96906	MS28775-214	.PACKING,PREFORMED	2
6	PFOZZ	97403	13215E6684	.BUSHING,MACHINE THR	2
7	PFOZZ	97403	13215E6729	.RETAINER,PACKING	2
8	PAOZZ	97403	13215E6625-1	.SHIM .008	V
8	PAOZZ	97403	13215E6625-2	.SHIM .010	V
8	PAOZZ	97403	13215E6625-3	.SHIM .012	V
8	PAOZZ	97403	13215E6625-4	.SHIM .016	V
9	PFODD	97403	13215E6669	.RING ASSEMBLY,BRAKE	1
10	PAOZZ	97403	13211E9569	..PIN,STRAIGHT,HEADLE	2
11	XAOZZ	19207	12332517	..RING	1
12	PAOZZ	96906	MS19061-20021	.BALL,BEARING	24
13	PAOZZ	19207	8351907	.EXPANDER,SEAL RING	2
14	PAOZZ	19207	8351895	.SEAL,RING,STATIONAR	2
15	PFODD	97403	13215E6668	.RING ASSEMBLY,BRAKE	1
16	XAOZZ	19207	12332518	..RING	1
17	PAOZZ	96906	MS16562-39	..PIN,SPRING	1
18	PAOZZ	97403	13211E9568	..PIN,STRAIGHT,HEADLE	1
19	PAOZZ	97403	13215E6591-3	.SCREW,CAP,HEXAGON H	23
20	PAOZZ	97403	13215E6683	.SPRING,HELICAL,COMP	2
21	PAOZZ	97403	13215E6682	.ROD END,THREADED	2
22	PFODD	97403	13215E6664	.RING ASSEMBLY,BRAKE	1
23	PAOZZ	97403	13211E9569	..PIN,STRAIGHT,HEADLE	2
24	XAOZZ	19207	12332512	..RING	1
25	PAOZZ	19207	8675777	.BOLT,SELF-LOCKING	1
26	PFODD	97403	13215E6663	.RING ASSEMBLY,BRAKE	1
27	XAOZZ	19207	12332510	..RING	1
28	PAOZZ	97403	13211E9568	..PIN,STRAIGHT,HEADLE	1
29	PAOZZ	96906	MS16562-39	..PIN,SPRING	1

END OF FIGURE

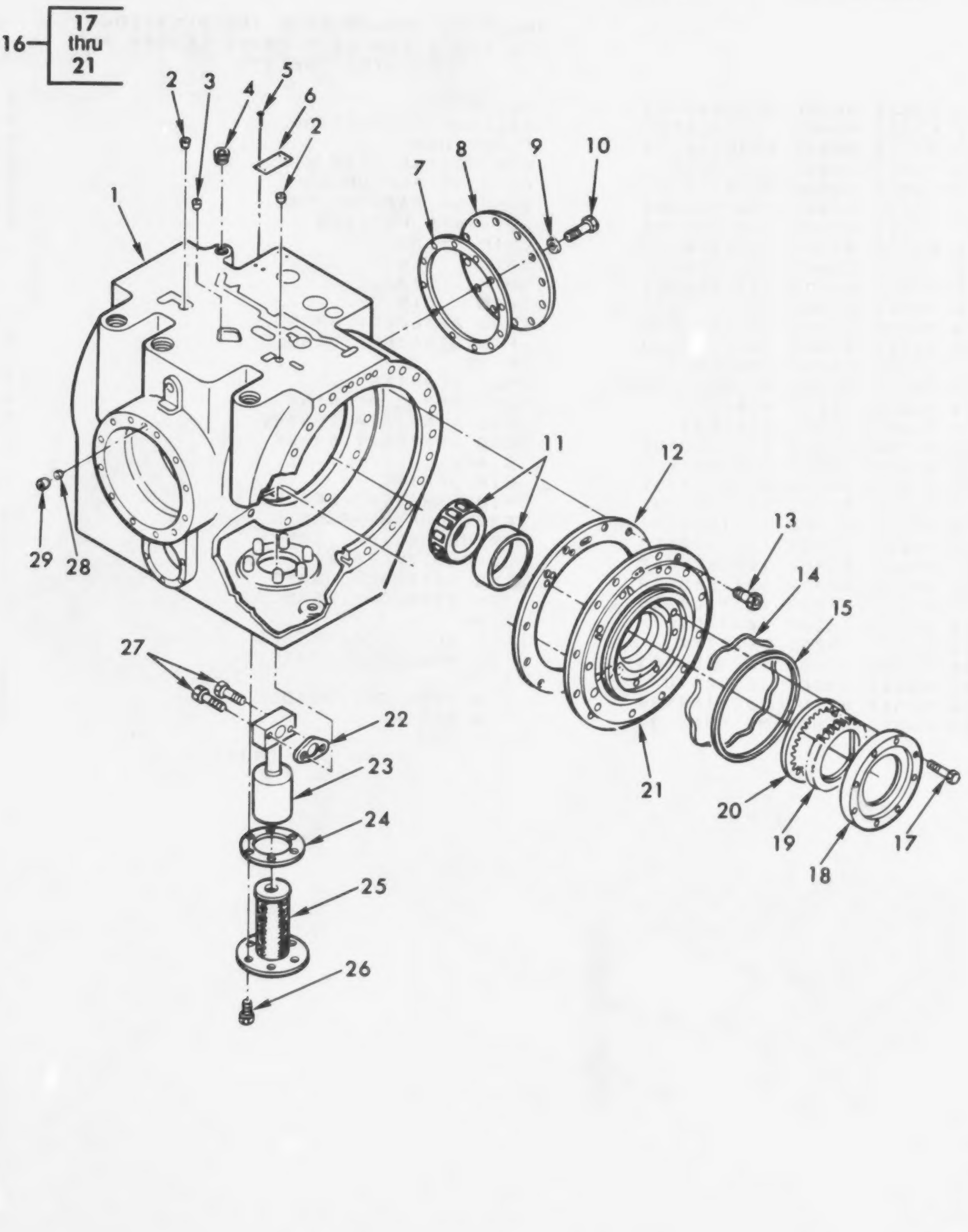

Figure 146. Steer Unit Oil Pump and Related Parts.

(1) ITEM NO	(2) SMR CODE	(3) CAGEC	(4) PART NUMBER	(5) DESCRIPTION AND USABLE ON CODES(UOC)	(6) QTY
				GROUP AU: POWERTRAIN INSTALLATION FIG.146 STEER UNIT OIL PUMP AND RELATED PARTS	
1	PFDZZ	97403	13215E6676	.HOUSING,MECHANICAL	1
2	PADZZ	97403	13215E6675-1	.RESTRICTOR,FLUID FL	2
3	PADZZ	97403	13215E6675-2	.RESTRICTOR,FLUID FL	1
4	PADZZ	96906	MS27769C5	.PLUG,PIPE	1
5	PADZZ	96906	MS21318-21	.SCREW,DRIVE	4
6	PFDZZ	97403	13215E6547	.PLATE,IDENTIFICATIO	1
7	PADZZ	97403	13215E6689	.GASKET	1
8	PFDZZ	97403	13215E6680	.COVER,ACCESS	1
9	PADZZ	96906	MS27183-12	.WASHER,FLAT	12
10	PADZZ	96906	MS90725-34	.SCREW,CAP,HEXAGON H	12
11	PADZZ	60038	42687-42620	.BEARING,ROLLER,TAPE	1
12	PADZZ	97403	13215E6624-1	.SHIM .008	V
12	PADZZ	97403	13215E6624-2	.SHIM .010	V
12	PADZZ	97403	13215E6624-3	.SHIM .012	V
12	PADZZ	97403	13215E6624-4	.SHIM .016	V
13	PADZZ	19207	7748617	.BOLT,SELF-LOCKING	12
14	PADZZ	97403	13215E6588-6	.RING,RETAINING	1
15	PADZZ	97403	13215E6665-2	.GASKET	1
16	PADDD	97403	13215E6697	.PUMP ASSY,STEERING	1
17	PADZZ	97403	13215E6591-7	..BOLT,MACHINE	8
18	PFDZZ	97403	13215E6698	..COVER,ACCESS	1
19	PADZZ	97403	13215E6700	..GEAR,SPUR	1
20	PADZZ	19207	7708356	..HUB,BODY	1
21	PFDZZ	97403	13215E6687	..DIAPHRAGM ASSEMBLY	1
22	PADZZ	97403	13215E6713	.GASKET	1
23	PFDZZ	97403	13215E6714	.TUBE ASSEMBLY,METAL	1
24	PAFZZ	97403	13215E6715	.GASKET	1
25	PAFZZ	97403	13215E6716	.STRAINER ELEMENT,SE	1
26	PAFZZ	97403	13215E6591-2	.SCREW,CAP,HEXAGON H	6
27	PADZZ	97403	13215E6591-6	.SCREW,CAP,HEXAGON H	2
28	PADZZ	97403	13215E6675-3	.RESTRICTOR,FLUID FL	1
29	PADZZ	96906	MS27769C2	.PLUG,PIPE	1

END OF FIGURE

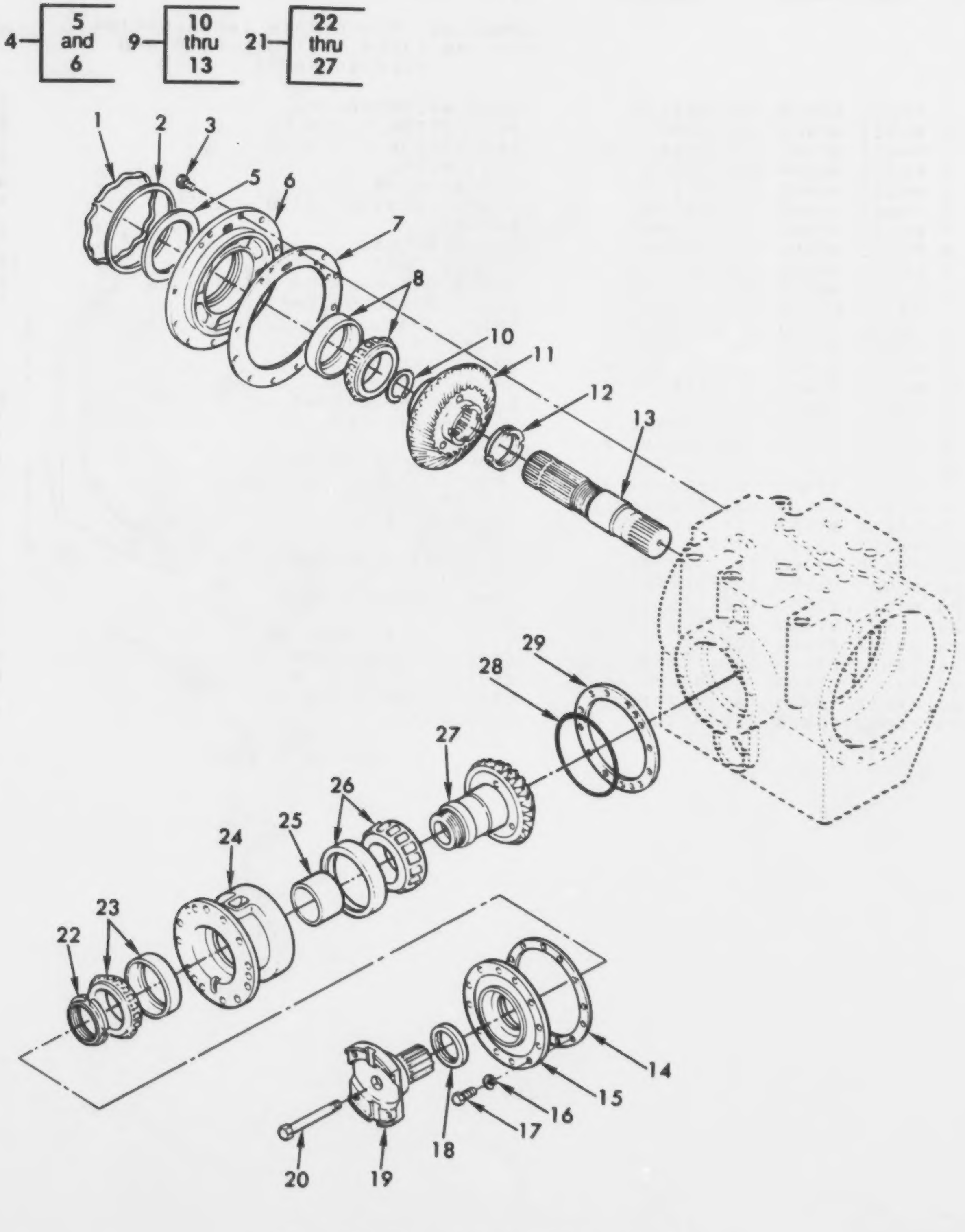

Figure 147. Steer Unit Shafts and Related Parts.

(1) ITEM NO	(2) SMR CODE	(3) CAGEC	(4) PART NUMBER	(5) DESCRIPTION AND USABLE ON CODES(UOC)	(6) QTY
				GROUP AU: POWERTRAIN INSTALLATION FIG.147 STEER UNIT SHAFTS AND RELATED PARTS	
1	PADZZ	97403	13215E6588-6	.RING,RETAINING....................	1
2	PADZZ	97403	13215E6665-2	.GASKET............................	1
3	PADZZ	19207	7748617	.BOLT,SELF-LOCKING.................	12
4	PADDD	97403	13215E6639	.PLATE ASSEMBLY,BRAK...............	1
5	PFDZZ	97403	13215E6549	..BAFFLE,STEERING..................	1
6	XADZZ	19207	12332511	..DIAPHRAGM........................	1
7	PADZZ	97403	13215E6624-1	.SHIM .008.........................	V
7	PADZZ	97403	13215E6624-2	.SHIM .010.........................	V
7	PADZZ	97403	13215E6624-3	.SHIM .012.........................	V
7	PADZZ	97403	13215E6624-4	.SHIM .016.........................	V
8	PADZZ	60038	64433-64700	.BEARING,ROLLER,TAPE...............	1
9	ADDDD	97403	13215E6666	.SHAFT ASSY........................	1
10	PADZZ	97403	13215E6629	..RING,RETAINING...................	1
11	KDDZZ	97404	13215E6628	..GEAR,BEVELED PART OF KIT P/N 13215E6617.........................	1
12	PADZZ	97403	13215E6655	..NUT,PLAIN,ROUND..................	1
13	PADZZ	97403	13215E6631	..SHAFT,SHOULDERED.................	1
14	PAFZZ	97403	13215E6618	.GASKET............................	1
15	PFFZZ	97403	13215E6614	.COVER,ACCESS......................	1
16	PAFZZ	96906	MS35338-47	.WASHER,LOCK.......................	12
17	PAFZZ	96906	MS90728-90	.SCREW,CAP,HEXAGON H...............	12
18	PAFZZ	80201	31250	.SEAL,PLAIN ENCASED................	1
19	PAFZZ	19207	12325741	.GEARSHAFT,SPUR....................	1
20	PAFZZ	19207	12332500	.SCREW,CAP,HEXAGON H...............	1
21	ADDDD	97403	13215E6623	.HOUSING ASSY......................	1
22	PADZZ	97403	13215E6615	..NUT,PLAIN,ROUND..................	1
23	PADZZ	60038	48190-48120	..BEARING,ROLLER,TAPE..............	1
24	PFDZZ	97403	13215E6622	..HOUSING,BEARING UNI..............	1
25	PADZZ	97403	13215E6621-1	..SPACER,SLEEVE 2.700-2.702 DIA....	1
25	PADZZ	97403	13215E6621-2	..SPACER,SLEEVE 2.688-2.690 DIA....	1
26	PADZZ	96906	MS19081-155	..BEARING..........................	1
27	KDDZZ	97403	13215E6620	..PINION ASSY PART OF KIT P/N 13215E6617 PART OF KIT P/N 13215E6617.........................	1
28	PADZZ	96906	MS28775-269	.PACKING,PREFORMED.................	1
29	PADZZ	97403	13215E6619-1	.SHIM .008.........................	V
29	PADZZ	97403	13215E6619-2	.SHIM .010.........................	V
29	PADZZ	97403	13215E6619-3	.SHIM .012.........................	V

END OF FIGURE

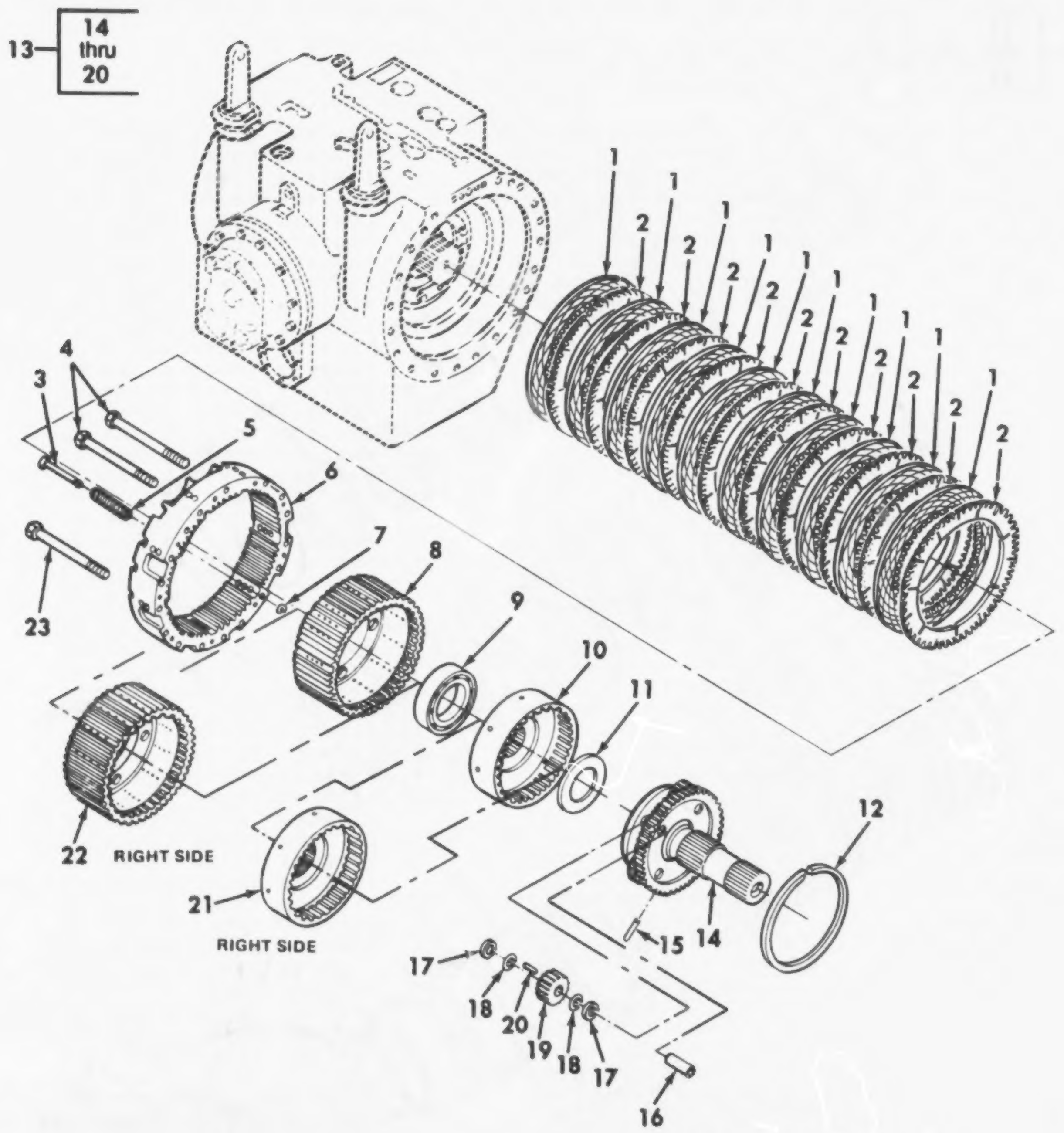

Figure 148. Steer Unit Left and Right Clutches (Sheet 1 of 2).

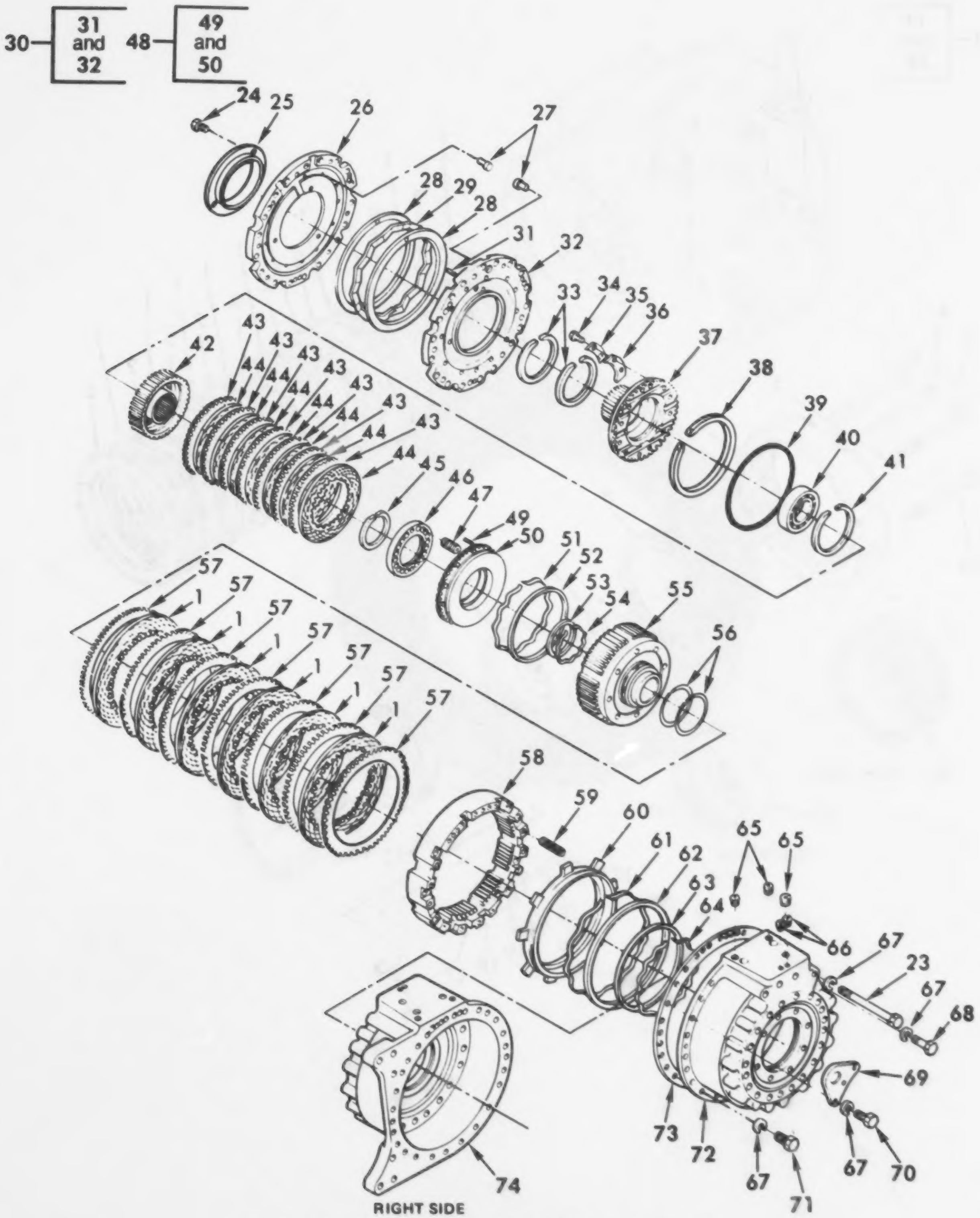

Figure 148. Steer Unit Left and Right Clutches (Sheet 2 of 2).

GROUP AU: POWERTRAIN INSTALLATION
FIG. 148 STEER UNIT LEFT AND RIGHT CLUTCHES

(1) ITEM NO	(2) SMR CODE	(3) CAGEC	(4) PART NUMBER	(5) DESCRIPTION AND USABLE ON CODES(UOC)	(6) QTY
1	PADZZ	13475	8351184	.DISK,CLUTCH	32
2	PADZZ	19207	8349197	.PLATE,INTERMEDIATE,	20
3	PFDZZ	19207	8351681	.PIN,GROOVED,HEADED	18
4	PADZZ	19207	12332501	.SCREW,CAP,HEXAGON H	4
5	PADZZ	19207	8351503	.SPRING,HELICAL,COMP	18
6	PFDZZ	19207	8351687	.RING,BRAKE ANCHOR T	2
7	PADZZ	96906	MS16632-1031	.RING,RETAINING	18
8	PADZZ	97403	13215E6721	.HUB,BODY	1
9	PADZZ	19207	7067228	.BEARING,BALL,ANNULA	2
10	PADZZ	97403	13215E6720	.HUB,BODY	1
11	PADZZ	19207	8351579	.WASHER,FLAT	2
12	PADZZ	19207	8348801	.RING,RETAINING	2
13	PADDD	97403	13215E6630	.CARRIER ASSEMBLY,GE	2
14	XADZZ	19207	8355937	..CARRIER	1
15	PADZZ	19207	12325800	..PIN,GROOVED,HEADLES	4
16	PADZZ	19207	8355949	..GEAR,WORM	4
17	PADZZ	97403	13215E6644	..BEARING,WASHER,THUR	8
18	PADZZ	19207	8357330	..SPACER,RING	8
19	PADZZ	19207	8351574	..GEAR CLUSTER,SPUR	4
20	PADZZ	19207	7709958	..ROLLER,BEARING	100
21	PADZZ	97403	13215E6667	.GEAR CLUSTER,HELICA	1
22	PADZZ	19207	8351587	.BRAKE DRUM	1
23	PADZZ	19207	8351646	.BOLT,MACHINE	40
24	PADZZ	97403	13215E6591-1	.BOLT,MACHINE	6
25	PADZZ	97403	13215E6651	.BUSHING,SLEEVE	2
26	PADZZ	97403	13215E6658	.PLATE,LOW REACTION	2
27	PADZZ	97403	13215E6662	.PIN,STRAIGHT,HEADED	48
28	PADZZ	97403	13215E6659	.SPACER,RING	4
29	PADZZ	97403	13215E6661	.RING,RETAINING	2
30	PADDD	97403	13215E6657	.PLATE ASSEMBLY,LOW	2
31	PADZZ	19207	12332502	..PIN,STRAIGHT,HEADLE	1
32	XADZZ	19207	12325818	..PLATE	1
33	PADZZ	19207	8351603	.SEAL RING,METAL	4
34	PADZZ	96906	MS90726-31	.SCREW,CAP,HEXAGON H	24
35	PADZZ	19207	8349783	.STRIP,LOCKING	12
36	PADZZ	19207	8355952	.RETAINER,CLUTCH	12
37	PADZZ	19207	8351584	.GEAR ASSEMBLY,CLUTC	2
38	PFDZZ	19207	8350405	..RETAINER,PACKING	1
39	PADZZ	96906	MS28775-271	.PACKING,PREFORMED	2
40	PADZZ	52676	6215	.BEARING,BALL,ANNULA	2
41	PADZZ	19207	7709185	.RING,RETAINING	2
42	PFDZZ	97403	13215E6597	.HUB,BODY	2
43	PADZZ	19207	8349941	.DISK,CLUTCH	14
44	PADZZ	13475	8351531	.DISK,CLUTCH	14
45	PADZZ	19207	8351581	.RING,RETAINING	2
46	PFDZZ	19207	8351588	.RETAINER,PISTON,CLU	2
47	PADZZ	19207	8351580	.SPRING,HELICAL,COMP	36
48	PADDD	97403	13215E6599	.PISTON ASSEMBLY,CLU	2

(1) ITEM NO	(2) SMR CODE	(3) CAGEC	(4) PART NUMBER	(5) DESCRIPTION AND USABLE ON CODES(UOC)	(6) QTY
49	PADZZ	96906	MS51400-190	..PIN,STRAIGHT,HEADLE................	2
50	XADZZ	19207	12325795	..PISTON..............................	1
51	PADZZ	19207	8351906	.EXPANDER,SEAL RING..................	2
52	PADZZ	19207	8351894	.SEAL,RING,CLUTCH PI.................	2
53	PADZZ	19207	8351899	.SEAL,NONMETALLIC RO.................	2
54	PADZZ	19207	8351911	.EXPANDE,SEAL RING...................	2
55	PADZZ	97403	13215E6650	.HUB,BODY............................	2
56	PADZZ	19207	8351602	.SEAL RING,METAL.....................	4
57	PADZZ	19207	7709353	.DISK,CLUTCH.........................	14
58	PFDZZ	19207	8351550	.ANCHOR,GEARED,STEER.................	2
59	PADZZ	19207	8351666	.SPRING,HELICAL,COMP.................	18
60	PADZZ	97403	13215E6613	.RING,CONNECTING,ROU.................	2
61	PADZZ	19207	8351909	.EXPANDER,SEAL RING..................	2
62	PADZZ	19207	8351897	.SEAL,RING,CLUTCH PI.................	2
63	PADZZ	97403	13215E6665-1	.GASKET..............................	2
64	PADZZ	97403	13215E6588-5	.RING,RETAINING......................	2
65	PADZZ	96906	MS27769C4	.PLUG,PIPE...........................	6
66	PADZZ	96906	MS27769C3	.PLUG,PIPE...........................	4
67	PADZZ	96906	MS35338-47	.WASHER,LOCK.........................	47
68	PADZZ	96906	MS90728-91	.SCREW,CAP,HEXAGON H.................	5
69	PFDZZ	19207	8348817	.BRACKET,EYE,ROTATIN.................	2
70	PADZZ	96906	MS90728-90	.SCREW,CAP,HEXAGON H.................	6
71	PADZZ	96906	MS90728-89	.SCREW,CAP,HEXAGON H.................	29
72	PFDZZ	97403	13215E6606	.HOUSING,MECHANICAL..................	1
73	PADZZ	97403	13215E6626	.GASKET..............................	2
74	PFDZZ	97403	13215E6605	.COVER,ACCESS........................	1

END OF FIGURE

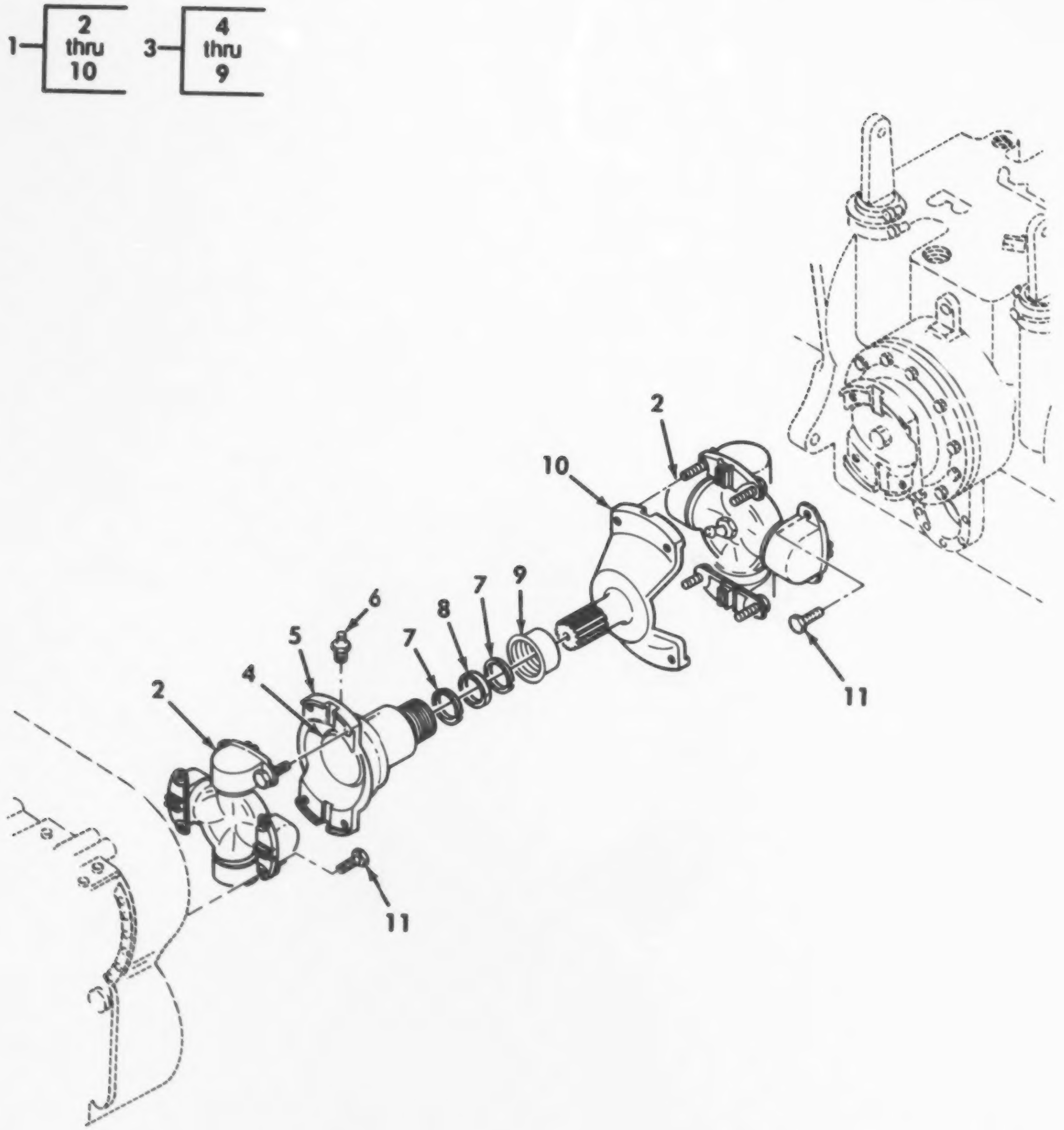

Figure 149. Propeller Shaft.

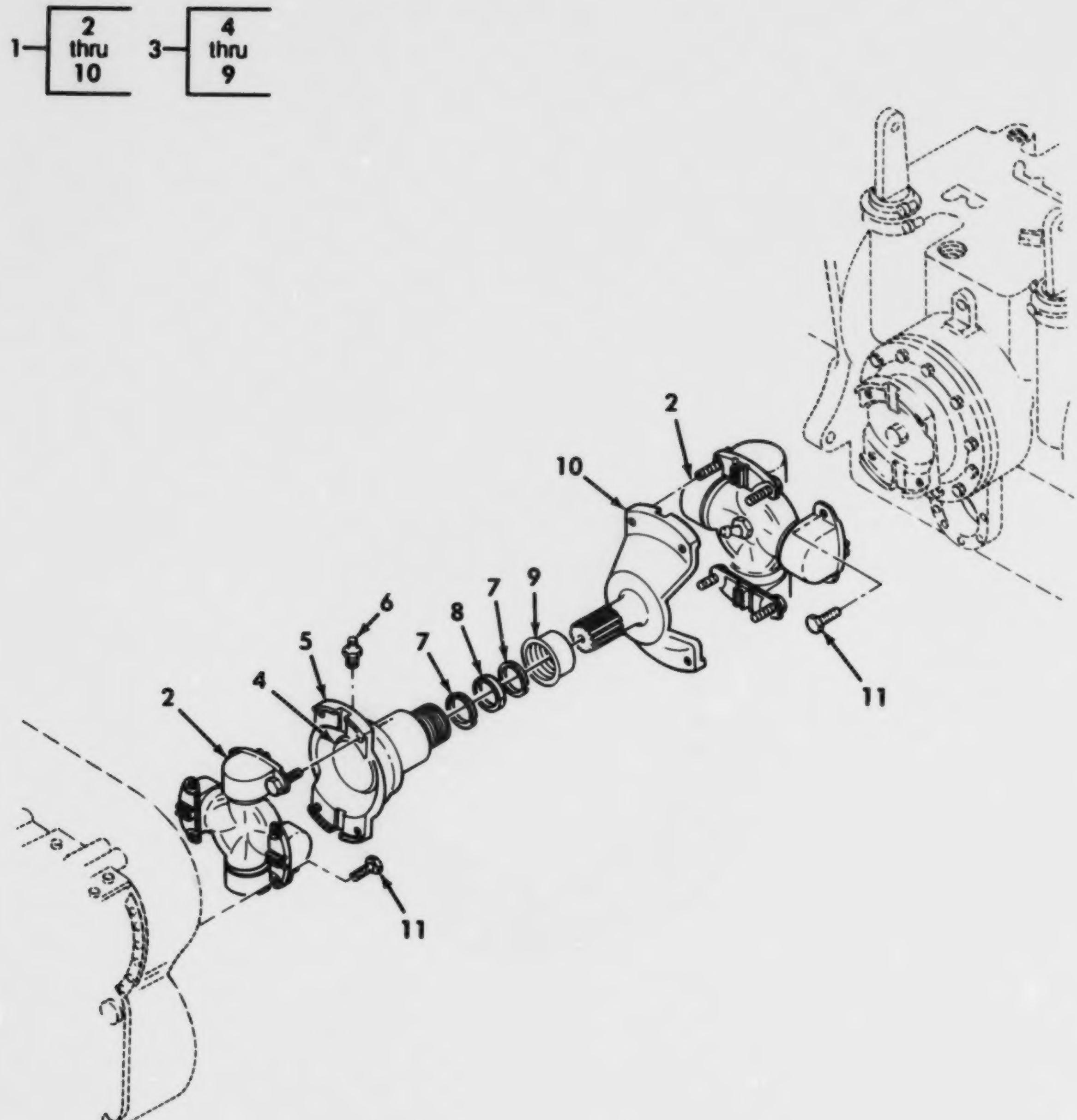

Figure 149. Propeller Shaft.

(1) ITEM NO	(2) SMR CODE	(3) CAGEC	(4) PART NUMBER	(5) DESCRIPTION AND USABLE ON CODES(UOC)	(6) QTY
				GROUP AU: POWERTRAIN INSTALLATION FIG. 149 PROPELLER SHAFT	
1	PFOOO	77873	4-73527	PROPELLER SHAFT....................	1
2	PFOOO	77873	6-8525	.YOKE, UNIVERSAL JOIN...............	2
3	PAOZZ	77873	114-8202A	.PARTS KIT, UNIVERSAL...............	2
4	XAOZZ	77873	27853J	..CUP..............................	1
5	XAOZZ	77873	6D8524	..YOKE.............................	1
6	PAOZZ	77873	9067J	..FITTING, LUBRICATION..............	1
7	PFOZZ	77873	26436J	..WASHER, SPLIT.....................	2
8	PFOZZ	77873	2715J	..FELT, MECHANICAL, PRE.............	1
9	PFOZZ	77873	3310J	..PACKING NUT.......................	1
10	PBOZZ	77873	32719J	.YOKE, UNIVERSAL JOIN...............	1
11	PAOZZ	96906	MS90727-116L	SCREW, CAP, HEXAGON H...............	8

END OF FIGURE

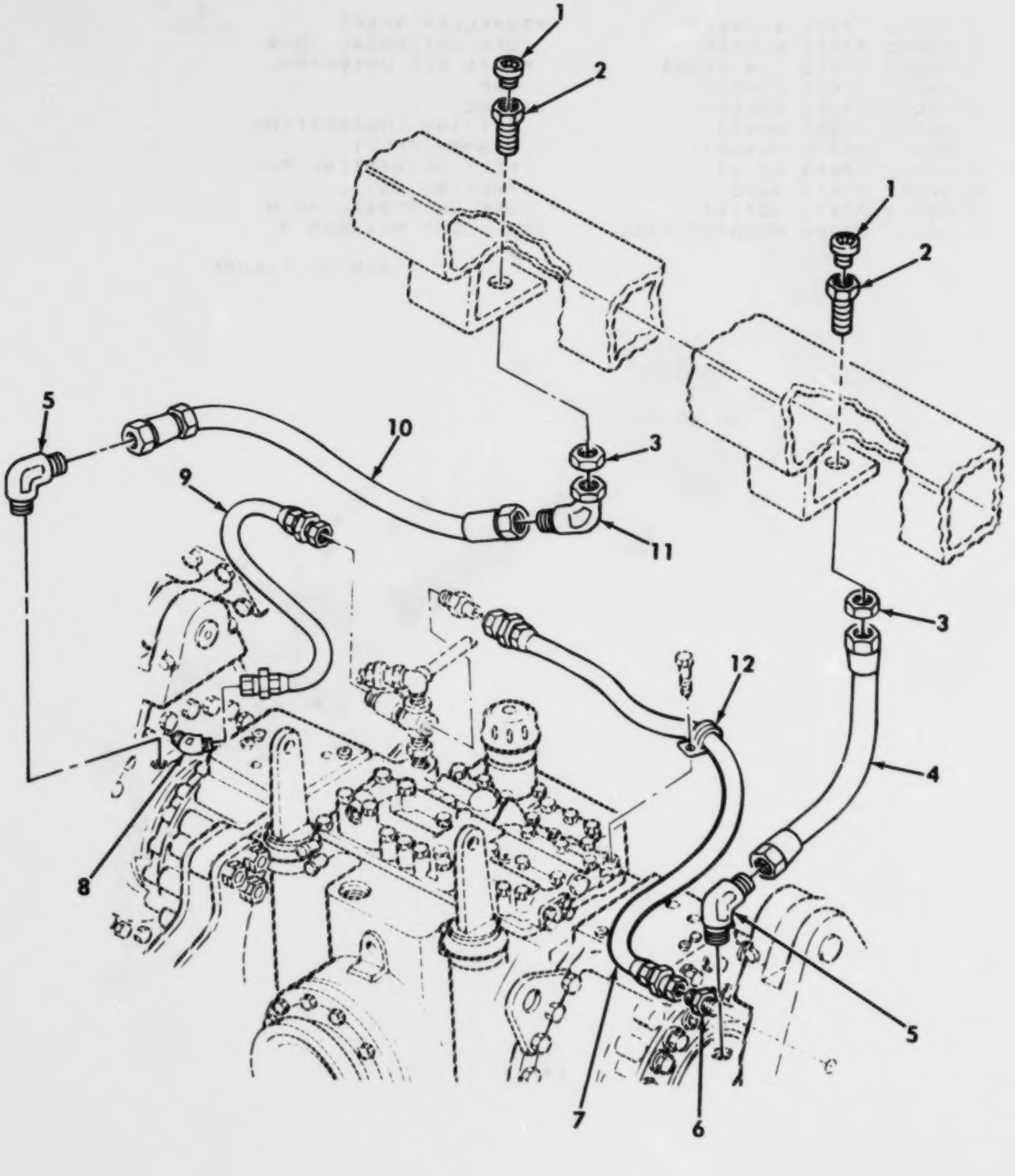

Figure 150. Final Drive Oil Breather Lines and Fittings.

(1) ITEM NO	(2) SMR CODE	(3) CAGEC	(4) PART NUMBER	(5) DESCRIPTION AND USABLE ON CODES(UOC)	(6) QTY
				GROUP AU: POWERTRAIN INSTALLATION FIG. 150 FINAL DRIVE OIL BREATHER LINES AND FITTINGS	
1	PAOZZ	96906	MS20913-8S	PLUG,PIPE	2
2	PFOZZ	98441	16WGTX-S	CONNECTOR,HOSE PLUG	2
3	PAOZZ	96906	MS51860-60	LOCKNUT,TUBE FITTIN	2
4	PAOZZ	19207	12357155	HOSE ASSEMBLY,NONME	1
5	PAOZZ	96906	MS51508A16-12	ELBOW,PIPE TO TUBE	2
6	PAOZZ	96906	MS51500A6	ADAPTER,STRAIGHT,PI	1
7	PAOZZ	19207	12357136-2	HOSE ASSEMBLY,NONME	1
8	PAOZZ	96906	MS51508A6	ELBOW,PIPE TO TUBE	1
9	PAOZZ	19207	12357159	HOSE ASSEMBLY,NONME	1
10	PAOZZ	19207	12357160	HOSE ASSEMBLY,NONME	1
11	PAOZZ	96906	MS51522A16	ELBOW,TUBE	1
12	PAOZZ	96906	MS21333-125	CLAMP,LOOP	1

END OF FIGURE

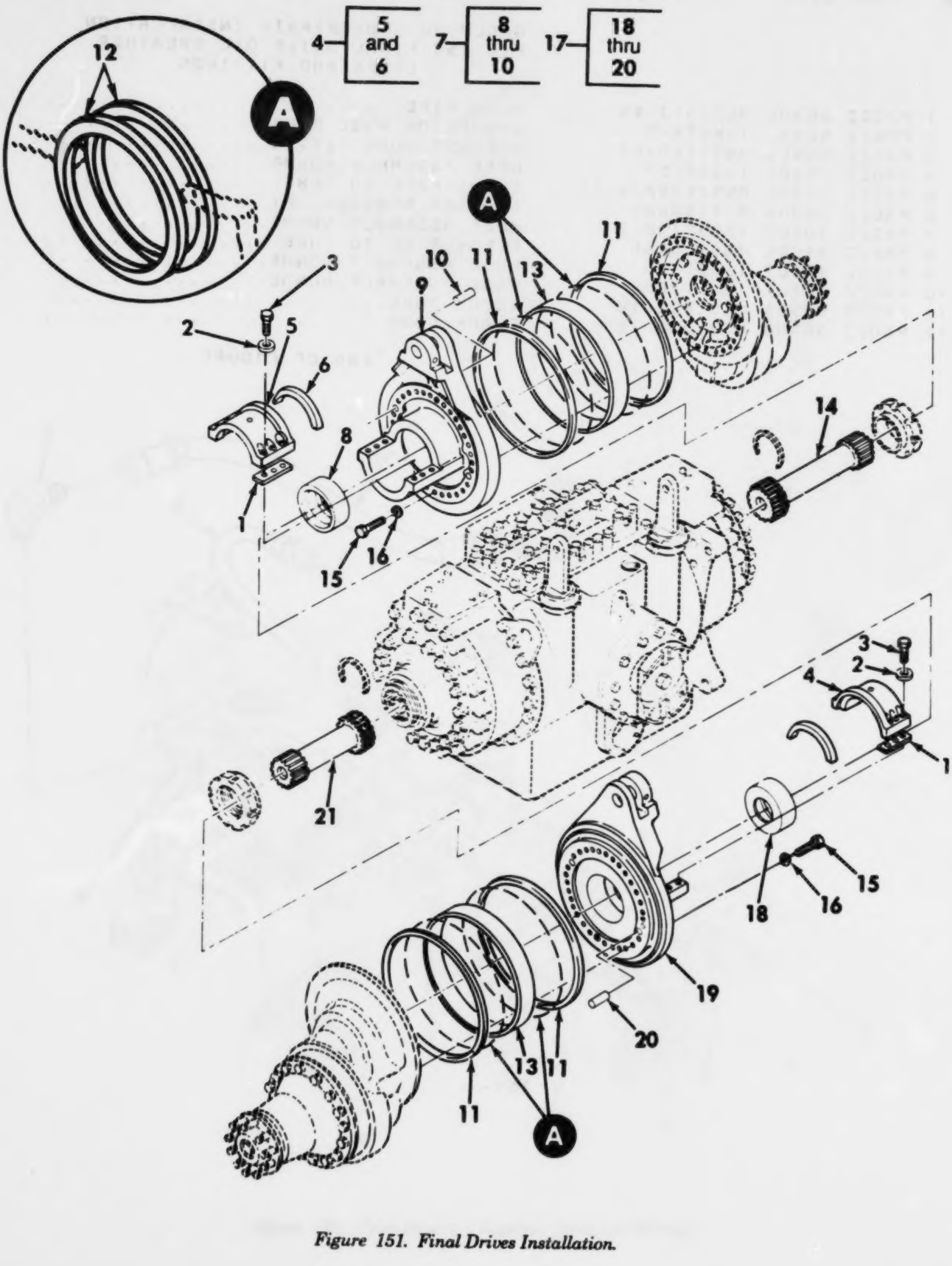

Figure 151. Final Drives Installation.

(1) ITEM NO	(2) SMR CODE	(3) CAGEC	(4) PART NUMBER	(5) DESCRIPTION AND USABLE ON CODES(UOC)	(6) QTY
				GROUP AU: POWERTRAIN INSTALLATION	
				FIG.151 FINAL DRIVES INSTALLATION	
1	PAOZZ	97403	13214E1964	GASKET	4
2	PAOZZ	96906	MS27183-16	WASHER,FLAT	12
3	PAOZZ	96906	MS90728-91L	BOLT,SELF-LOCKING	12
4	PAOFF	97403	13211E9107	CAP,SADDLE	2
5	XAFZZ	97403	13211E9107-1	.CAP	1
6	PAOZZ	97403	13211E9156	.GASKET	1
7	PAFFF	97403	13211E9102	FLANGE ASSEMBLY	1
8	PFFZZ	19207	12335326	.BARRIER,OIL	1
9	XAFZZ	19207	12331948	.FLANGE	1
10	PAFZZ	96906	MS16555-132	.PIN,STRAIGHT,HEADLE	2
11	PAFZZ	96906	MS28775-387	PACKING,PREFORMED	4
12	PAFZZ	19207	12335332	BEARING,WASHER,THRU	4
13	PAFZZ	97403	13214E2455	RETAINER,PACKING	2
14	PAFZZ	97403	13211E9109	SHAFT,SHOULDERED	1
15	PAFZZ	96906	MS90728-169L	BOLT,SELF-LOCKING	59
16	PAFZZ	96906	MS9320-16	WASHER FLAT	59
17	PBFFF	97403	13211E9105	FLANGE,ADJUSTING,RI	1
18	PFFZZ	19207	12335326	.BARRIER,OIL	1
19	XAFZZ	19207	12331906	.FLANGE	1
20	PAFZZ	96906	MS16555-132	.PIN,STRAIGHT,HEADLE	2
21	PAFZZ	97403	13211E9108	SHAFT,SHOULDERED	1

END OF FIGURE

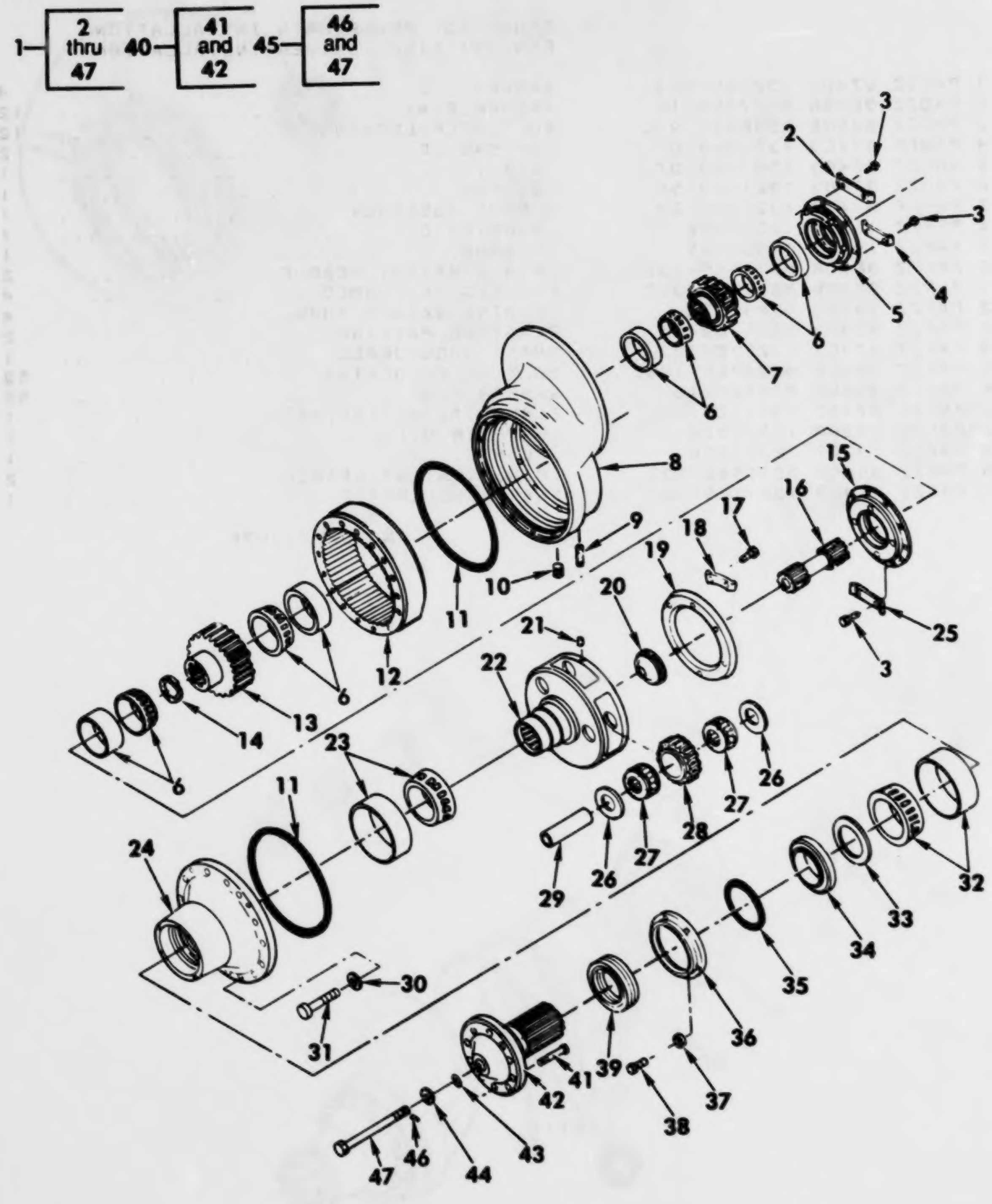

Figure 152. Final Drive Assembly.

(1) ITEM NO	(2) SMR CODE	(3) CAGEC	(4) PART NUMBER	(5) DESCRIPTION AND USABLE ON CODES(UOC)	(6) QTY
				GROUP AU: POWERTRAIN INSTALLATION	
				FIG.152 FINAL DRIVE ASSEMBLY	
1	PAFDD	97403	13211E8700	DRIVE ASSY,FINAL....................	2
2	PFDZZ	97403	13214E2107-3	.LOCKING FLATE,NUT A................	1
3	PADZZ	96906	MS90728-60L	.BOLT,SELF-LOCKING..................	16
4	PFDZZ	97403	13214E2107-1	.LOCKING PLATE,NUT A................	3
5	PFDZZ	97403	13211E8708	.HOUSING,MECHANICAL.................	1
6	PADZZ	60038	27690/27620	.BEARING,ROLLER,TAPE................	4
7	PFDZZ	97403	13211E8711	.GEAR,SPUR..........................	1
8	PFDZZ	97403	13211E8701	.HOUSING,MECHANICAL.................	1
9	PADZZ	97403	13214E1993	.PLUG,PIPE..........................	1
10	PADZZ	96906	MS49006-10	.PLUG,PIPE,MAGNETIC.................	1
11	PADZZ	19207	12369120	.SEAL,NONMETALLIC RO................	2
12	PFDZZ	97403	13211E8703	.GEAR,INTERNAL......................	1
13	PFDZZ	97403	13211E8710	.GEAR,SPUR..........................	1
14	PFDZZ	81349	M27426-3172B	.RING,RETAINING.....................	1
15	PFDZZ	97403	13211E8707	.CAP,GEAR...........................	1
16	PFDZZ	97403	13211E8705	.GEARSHAFT,SPUR.....................	1
17	PADZZ	96906	MS90728-57L	.BOLT,SELF-LOCKING..................	6
18	PFDZZ	97403	13214E2129	.LOCKING PLATE,NUT A................	3
19	PFDZZ	97403	13211E8717	.DEFLECTOR,DIRT AND.................	1
20	PADZZ	97403	13211E8714	.PLUG,CARRIER.......................	1
21	PADZZ	97403	13214E2119	.PIN,SPRING.........................	3
22	PFDZZ	97403	13211E8713	.HOUSING,MECHANICAL.................	1
23	PADZZ	60038	48393/48320	.BEARING,ROLLER,TAPE................	1
24	PFDZZ	97403	13211E8702	.HOUSING,MECHANICAL.................	1
25	PFDZZ	97403	13214E2107-2	.LOCKING PLATE,NUT A................	4
26	PFDZZ	97403	13214E2106	.WASHER,FLAT........................	6
27	PFDZZ	08162	MOJ5309	.ROLLER ASSEMBLY,JOU................	6
28	PFDZZ	97403	13211E8704	.GEAR,SPUR..........................	3
29	PFDZZ	97403	13214E2109	.SHAFT,STRAIGHT.....................	3
30	PADZZ	96906	MS9320-14	.WASHER,FLAT........................	16
31	PADZZ	96906	MS90728-127L	.BOLT,SELF-LOCKING..................	16
32	PADZZ	60038	48385/48320	.BEARING,ROLLER,TAPE................	1
33	PAFZZ	97403	13214E2817-1	.SHIM .030..........................	V
33	PAFZZ	97403	13214E2817-2	.SHIM .010..........................	V
33	PAFZZ	97403	13214E2817-3	.SHIM .005..........................	V
34	PAFZZ	97403	13211E8712	.WASHER,SHOULDERED A................	1
35	PAFZZ	96906	MS28775-263	.PACKING,PREFORMED..................	1
36	PFFZZ	97403	13204E2499	.RETAINER,PACKING...................	1
37	PAFZZ	96906	MS27183-14	.WASHER,FLAT........................	5
38	PAFZZ	96906	MS90728-60L	.BOLT,SELF-LOCKING..................	5
39	PAFZZ	80201	B72-80-4450	.SEAL,PLAIN.........................	1
40	PFFFF	97403	13211E8706	.SHAFT,SPROCKET.....................	1
41	PAFZZ	97403	13204E3398	..BOLT,EXTERNALLY REL...............	10
42	XAFZZ	19207	12325794	..SHAFT.............................	1
43	PAFZZ	96906	MS28775-210	.PACKING,PREFORMED..................	1
44	PAFZZ	96906	MS9320-17	.WASHER,FLAT........................	1
45	PAFZZ	97403	13211E8718	.BOLT,SELF-LOCKING..................	1
46	PAFZZ	97403	13211E8718-2	..PLUG,BOLT,LOCKING PLASTIC NYLON..	1
47	XAFZZ	97403	13211E8718-1	..BOLT..............................	1

END OF FIGURE

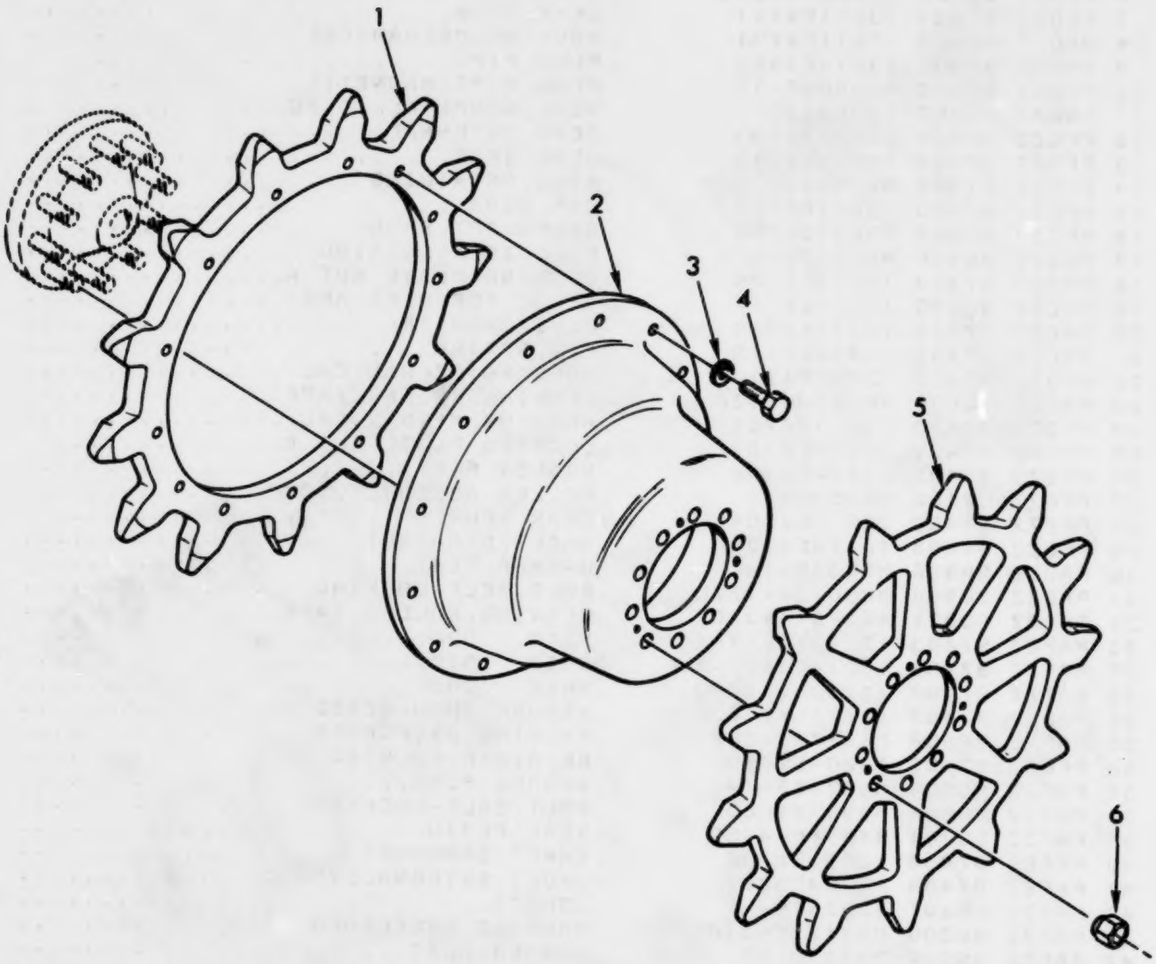

Figure 153. Drive Sprockets.

(1) ITEM NO	(2) SMR CODE	(3) CAGEC	(4) PART NUMBER	(5) DESCRIPTION AND USABLE ON CODES(UOC)	(6) QTY
				GROUP AU: POWERTRAIN INSTALLATION FIG.153 DRIVE SPROCKETS	
1	PAOZZ	19207	12332556	SPROCKET WHEEL INNER................	2
2	PAOZZ	19207	12332555	HUB,BODY...........................	2
3	PAOZZ	97403	13204E2730-2	WASHER,FLAT........................	26
4	PAOZZ	96906	MS35764-1519	BOLT,SELF-LOCKING..................	26
5	PAOZZ	97403	13211E9213	SPROCKET WHEEL OUTER...............	2
6	PAOZZ	72962	52NE2120120	NUT,SELF-LOCKING...................	20

END OF FIGURE

1— 2 thru 5

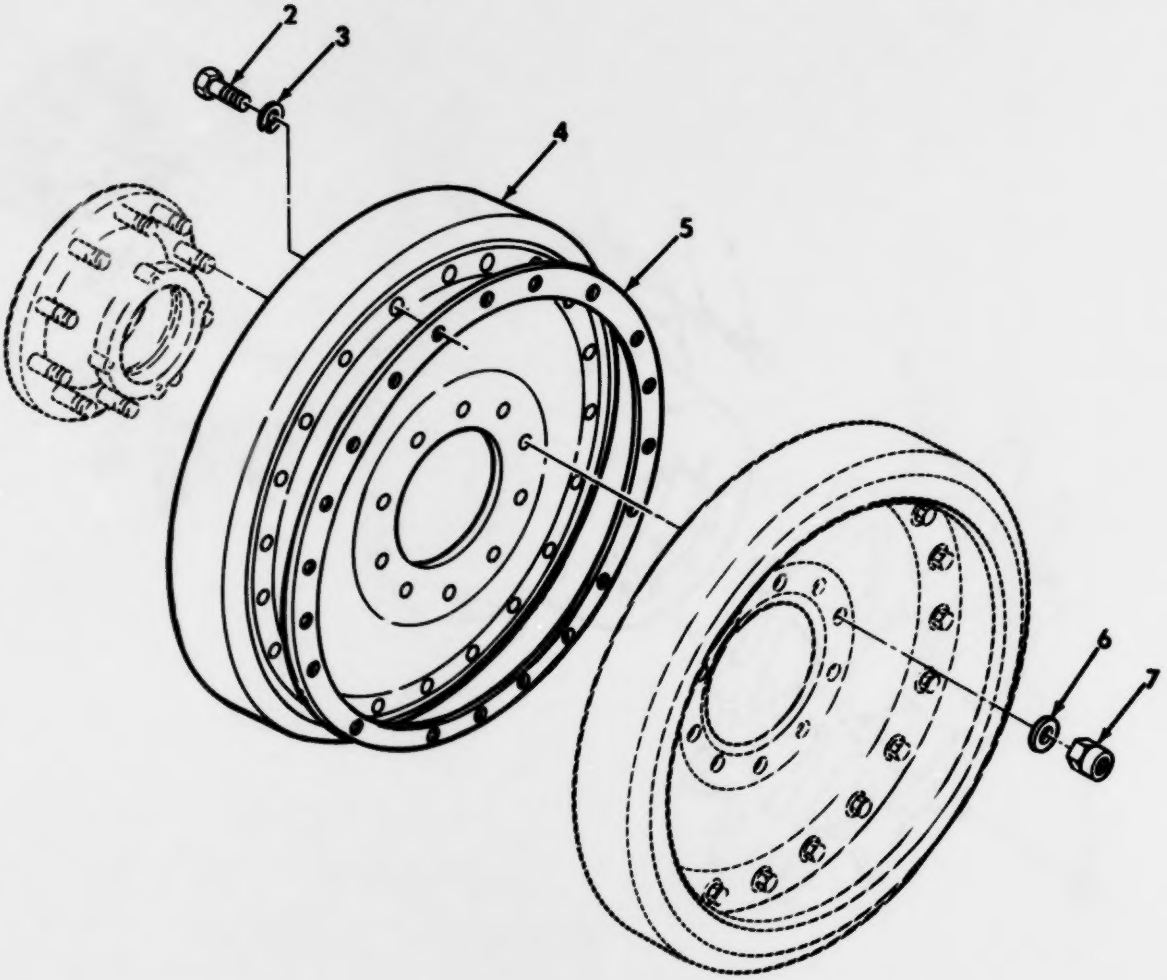

Figure 154. Roadwheel.

(1) ITEM NO	(2) SMR CODE	(3) CAGEC	(4) PART NUMBER	(5) DESCRIPTION AND USABLE ON CODES(UOC)	(6) QTY
				GROUP AU: POWERTRAIN INSTALLATION FIG. 154 ROADWHEEL	
1	PAODD	97403	13211E9207	WHEEL, SOLID RUBBER..................	16
2	PADZZ	96906	MS90728-32	.SCREW, CAP, HEXAGON H..............	20
3	PADZZ	96906	MS35338-45	.WASHER, LOCK.......................	20
4	PADZZ	19207	12334969	.WHEEL.............................	1
5	PADZZ	19207	12334968	.RING, WEAR.........................	1
6	PAOZZ	97403	13204E2730-1	WASHER, FLAT........................	80
7	PAOZZ	72962	52NE2120120	NUT, SELF-LOCKING...................	80

END OF FIGURE

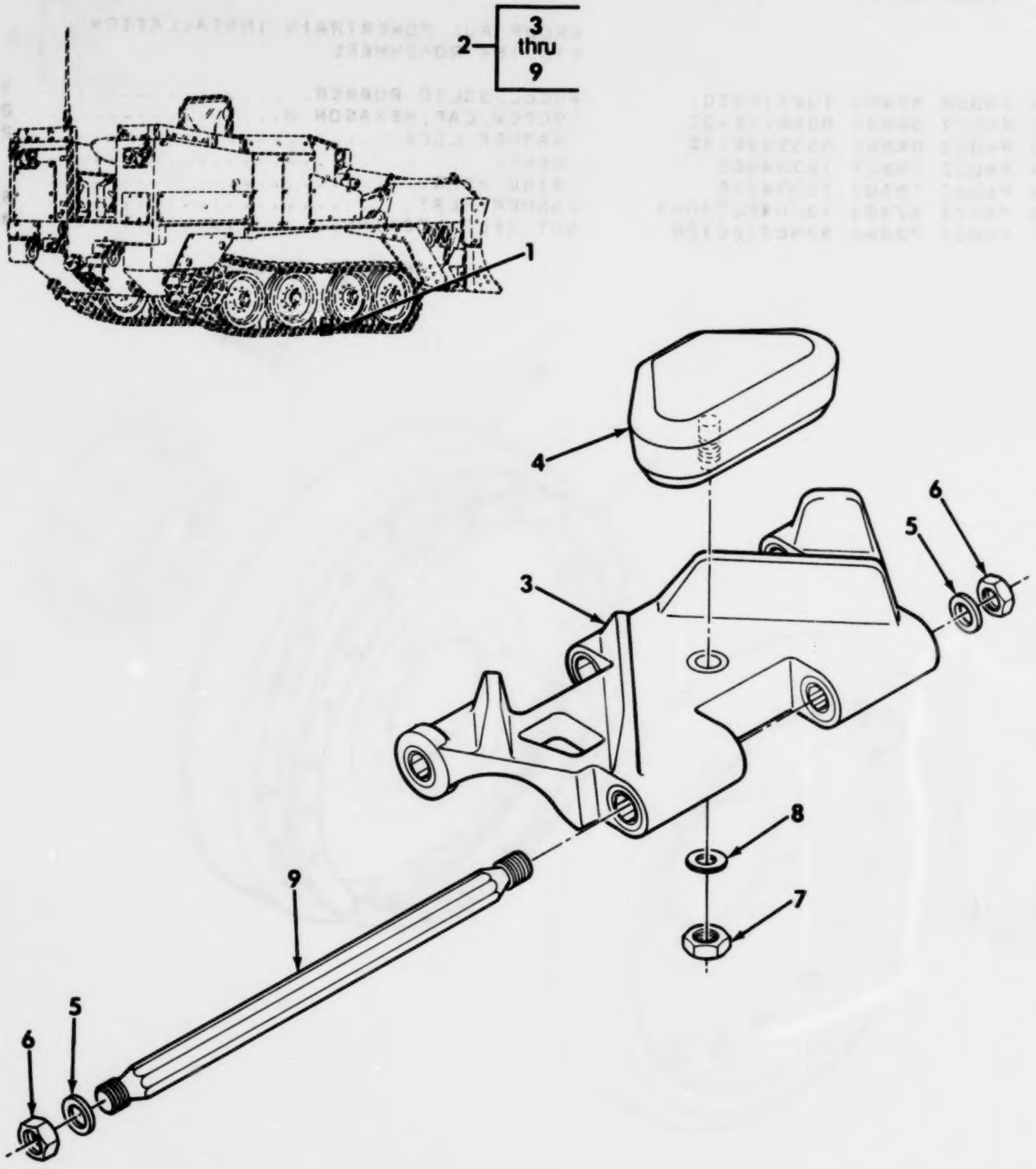

Figure 155. Track Shoe Assembly.

(1) ITEM NO	(2) SMR CODE	(3) CAGEC	(4) PART NUMBER	(5) DESCRIPTION AND USABLE ON CODES(UOC)	(6) QTY
				GROUP AU: POWERTRAIN INSTALLATION FIG.155 TRACK SHOE ASSEMBLY	
1	PAODD	19207	12352500-2	TRACK SHOE ASSEMBLY (8 SHOES)......	8
2	PAODD	19207	12352500-1	TRACK SHOE,VEHICULA (1 SHOE).......	1
3	XAODD	97403	13211E9225	.TRACK SHOE,VEHICULA.................	1
4	KFOZZ	97403	13204E2680	.TRACK SHOE,VEHICULA PART OF KIT P/N 5705404..............................	1
5	PAOZZ	97403	13204E2730-1	.WASHER,FLAT.........................	2
6	PAOZZ	72962	52NE2120120	.NUT,PLAIN,HEXAGON..................	2
7	KFOZZ	72962	52NE2120120	.NUT,PLAIN,HEXAGON PART OF KIT P/N 5705404..............................	1
8	PAOZZ	88044	AN960XC1216L	.WASHER,FLAT PART OF KIT P/N 5705404	1
9	PAOZZ	97403	13211E9226	.PIN,STRAIGHT,HEADED................	1

END OF FIGURE

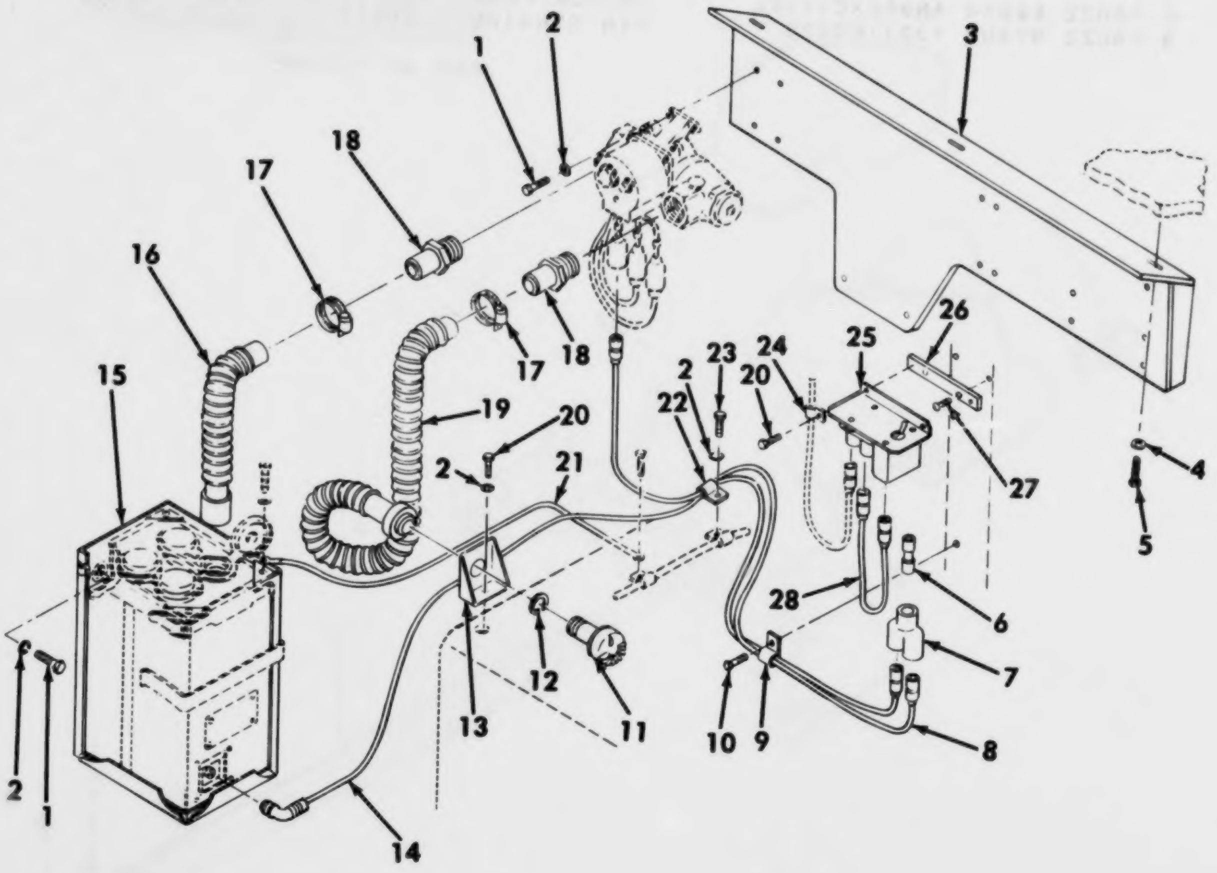

Figure 156. Air Purifier Installation.

(1) ITEM NO	(2) SMR CODE	(3) CAGEC	(4) PART NUMBER	(5) DESCRIPTION AND USABLE ON CODES(UOC)	(6) QTY
				GROUP AV: PURIFIER INSTALLATION, AIR FIG.156 AIR PURIFIER INSTALLATION	
1	PAOZZ	96906	MS90728-6L	BOLT,SELF-LOCKING	8
2	PAOZZ	96906	MS27183-10	WASHER,FLAT	10
3	PFOZZ	19207	12334929	BRACKET ASSY,MOUNTI	1
4	PAOZZ	96906	MS27183-14	WASHER,FLAT	3
5	PAOZZ	96906	MS90728-62L	BOLT,SELF-LOCKING	3
6	PAOZZ	19207	8741492	ADAPTER,CONNECTOR	1
7	PAOZZ	96906	MS27147-1	ADAPTER,CONNECTOR	1
8	PAOZZ	19207	12325762	CABLE ASSEMBLY,SPEC	1
9	PAOZZ	17773	11176106-5	CLAMP,LOOP	1
10	PAOZZ	96906	MS51850-64	SCREW,TAPPING,THREA	1
11	PAOZZ	81361	B5-19-1829	CONNECTOR,ORIFICE A	1
12	PAOZZ	96906	MS16624-4087	RING,RETAINING	1
13	PFOZZ	81361	B5-19-1831	BRACKET,ANGLE	1
14	PAOZZ	19207	12352523	LEAD,ELECTRICAL	1
15	PFOZZ	81361	D5-19-1754	FRAME ASSEMBLY	1
16	PAOZZ	81361	C5-19-876-1	HOSE ASSEMBLY,AIR D	1
17	PAOZZ	96906	MS35842-11	CLAMP,HOSE	2
18	PAOZZ	81361	B5-19-1676-2	ADAPTER,STRAIGHT,PI	2
19	PAOZZ	81361	C5-19-1893-30	HOSE,AIR DUCT	1
20	PAOZZ	96906	MS90728-5L	BOLT,SELF-LOCKING	3
21	PAOZZ	81361	B5-19-1663	LEAD,ELECTRICAL	1
22	PAOZZ	96906	MS21333-97	CLAMP,LOOP	1
23	PAOZZ	96906	MS90728-3L	BOLT,SELF-LOCKING	1
24	PAOZZ	96906	MS21333-96	CLAMP,LOOP	1
25	PAOZZ	81361	C5-19-1757	CIRCUIT BREAKER AND	1
26	PAOZZ	19207	12334829	BRACKET,MOUNTING	1
27	PAOZZ	96906	MS35190-291	SCREW,MACHINE	2
28	PAOZZ	81361	B5-19-1768	CABLE ASSEMBLY,SPEC	1

END OF FIGURE

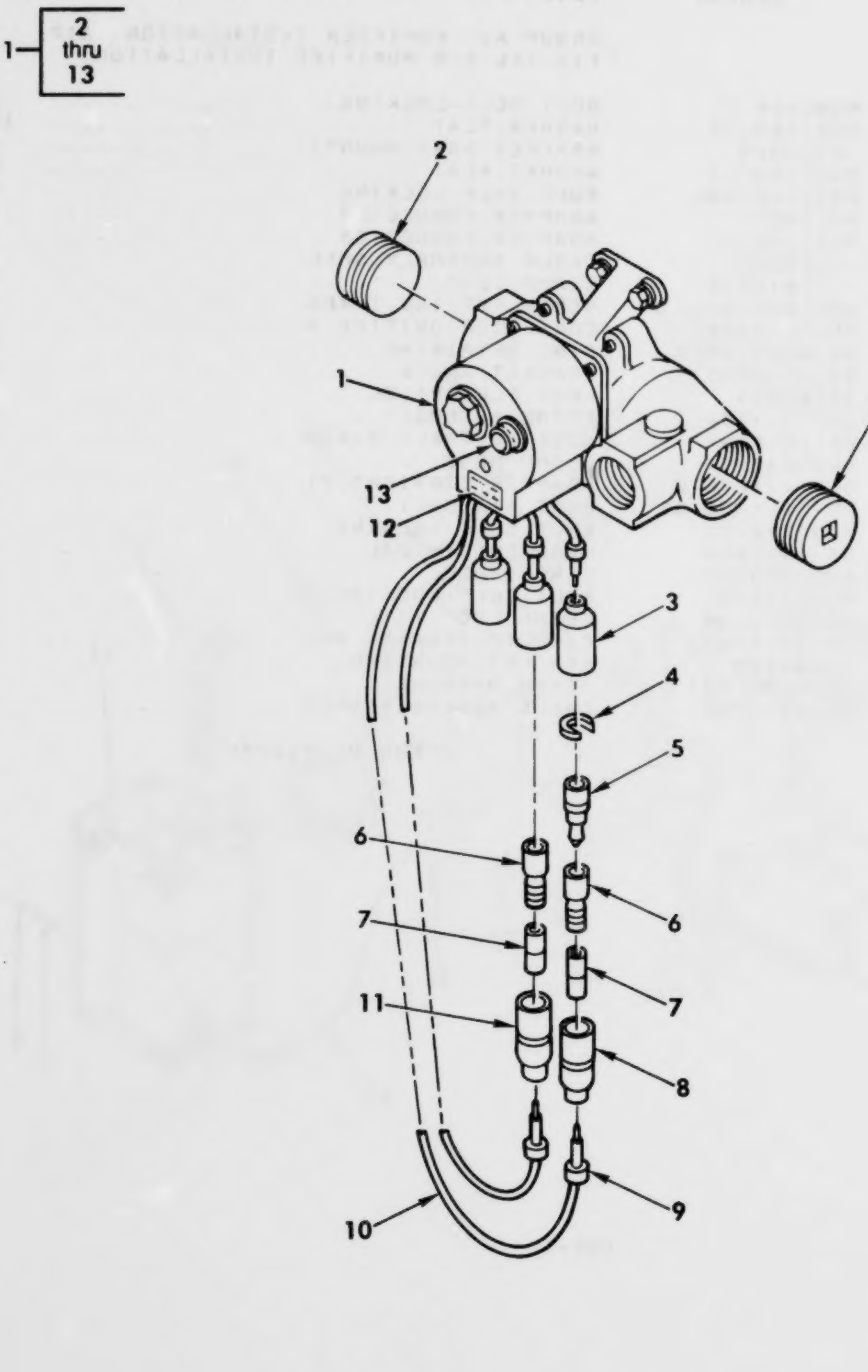

Figure 157. Air Purifier Heater Assembly.

(1) ITEM NO	(2) SMR CODE	(3) CAGEC	(4) PART NUMBER	(5) DESCRIPTION AND USABLE ON CODES(UOC)	(6) QTY
				GROUP AV: PURIFIER INSTALLATION, AIR FIG.157 AIR PURIFIER HEATER ASSEMBLY	
1	PAOOO	81361	E5-19-1782	HEATER,AIR,ELECTRIC..................	1
2	PAOZZ	99017	P88	.PLUG,PIPE...........................	2
3	PAOZZ	19207	8338566	.SHELL,ELECTRICAL CO.................	3
4	PAOZZ	19207	8338567	.WASHER,SLOTTED......................	3
5	PAOZZ	96906	MS27148-2	.CONTACT,ELECTRICAL..................	3
6	PAOZZ	19207	8338564	.TERMINAL ASSEMBLY...................	2
7	PAOZZ	19207	8338562	.INSULATOR,BUSHING...................	2
8	PAOZZ	19207	8338561	.SHELL,ELECTRICAL CO.................	1
9	PAOZZ	96906	MS39020-1	.BAND,MARKER.........................	6
10	MOOZZ	81349	M13486/1-5AR	.WIRE,ELECTRICAL MAKE FROM ELECTRICAL WIRE,P/N M13486/1-5......	V
11	PAOZZ	19207	7982401	.CONNECTOR,ELECTRICA.................	1
12	PFOZZ	34228	885F052005	.PLATE,INSTRUCTION...................	1
13	PAOZZ	19207	7000296	.LIGHT,INDICATOR.....................	1

END OF FIGURE

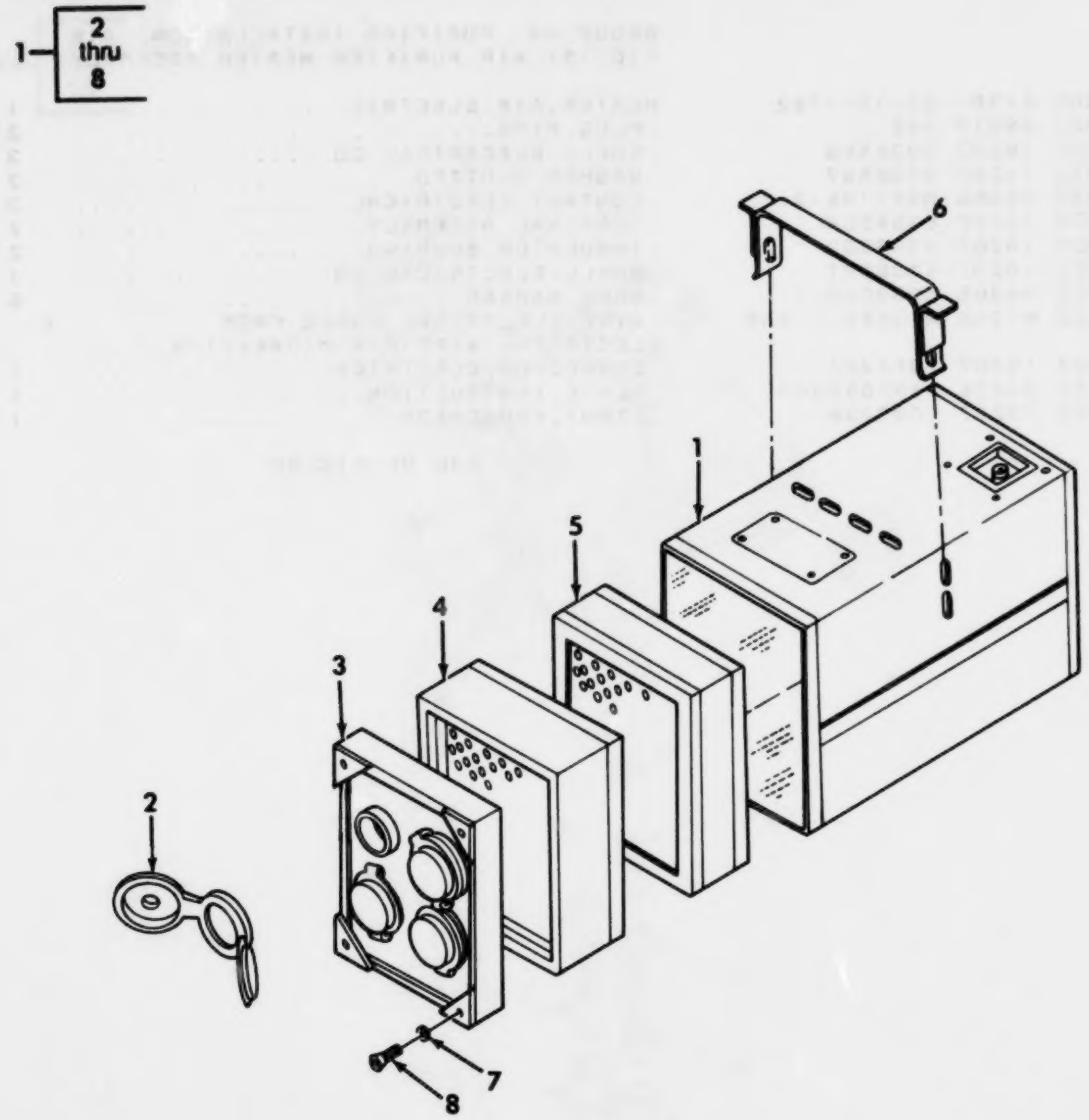

Figure 158. M2A2 Air Purifier/Precleaner Assembly.

(1) ITEM NO	(2) SMR CODE	(3) CAGEC	(4) PART NUMBER	(5) DESCRIPTION AND USABLE ON CODES(UOC)	(6) QTY
				GROUP AV: PURIFIER INSTALLATION, AIR	
				FIG.158 M2A2 AIR PURIFIER / PRECLEANER ASSEMBLY	
1	PAOOA	81361	D5-19-1772	PURIFIER,AIR SEE TM3-4240-276-30&P.	1
2	PAOZZ	81361	C5-19-1827	.CAP,AIR FLOW......................	4
3	PAOZZ	81361	C5-19-1773	.MANIFOLD ASSEMBLY.................	1
4	PAOZA	81361	C5-19-2267	.FILTER,GAS........................	1
5	PAOZZ	81361	C5-19-853	.FILTER,PARTICULATE................	1
6	PAOZZ	81361	C5-19-1662	.CLIP,SPRING.......................	1
7	PAOZZ	96906	MS35338-42	.WASHER,LOCK.......................	4
8	PAOZZ	96906	MS35206-247	.SCREW,MACHINE.....................	4

END OF FIGURE

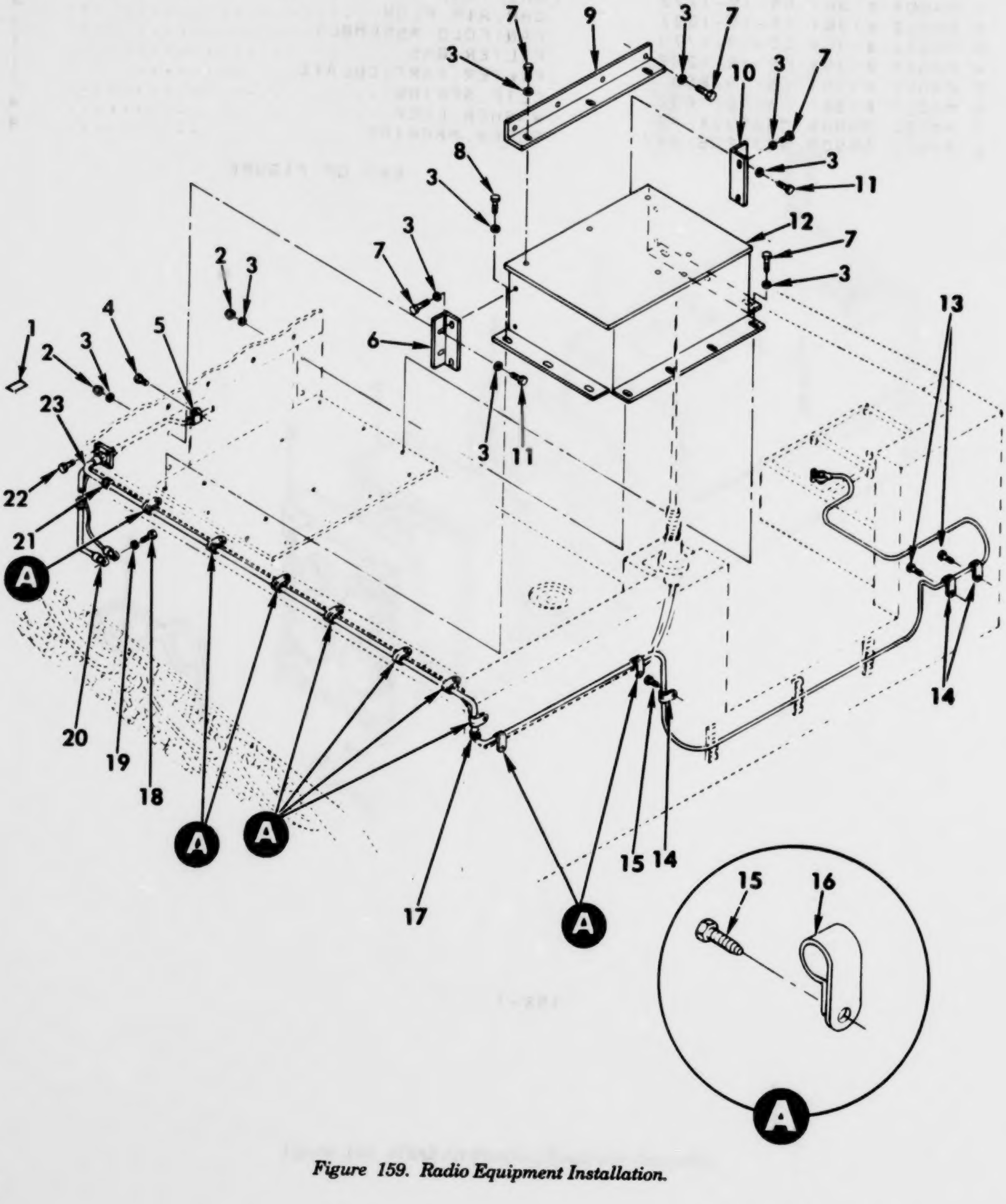

Figure 159. Radio Equipment Installation.

(1) ITEM NO	(2) SMR CODE	(3) CAGEC	(4) PART NUMBER	(5) DESCRIPTION AND USABLE ON CODES(UOC)	(6) QTY
				GROUP AW: RADIO EQUIPMENT INSTALLATION	
				FIG.159 RADIO EQUIPMENT INSTALLATION	
1	PFOZZ	19207	12334909	PLATE,INSTRUCTION	1
2	PAOZZ	96906	MS51922-33	NUT,SELF-LOCKING,HE	4
3	PAOZZ	96906	MS27183-18	WASHER,FLAT	29
4	PAOZZ	96906	MS90728-5L	BOLT,SELF-LOCKING	1
5	PAOZZ	96906	MS21333-102	CLAMP,LOOP	1
6	PFOZZ	19207	12357213-1	BRACKET,ANGLE	1
7	PAOZZ	96906	MS90728-111L	BOLT,SELF-LOCKING	19
8	PAOZZ	96906	MS90728-115L	BOLT,SELF-LOCKING	2
9	PFOZZ	19207	12357212	ANGLE,RADIO INSTALL	1
10	PFOZZ	19207	12357213-2	BRACKET,ANGLE	1
11	PAOZZ	96906	MS90728-115	SCREW,CAP,HEXAGON H	4
12	PFOZZ	19207	12367590	BOX,ACCESSORIES STO	1
13	PAOZZ	96906	MS24629-56	SCREW,TAPPING,THREA	2
14	PAOZZ	96906	MS21333-100	CLAMP,LOOP	3
15	PAOZZ	96906	MS51850-85	SCREW,TAPPING,THREA	10
16	PAOZZ	96906	MS21333-106	CLAMP,LOOP	9
17	PAOZZ	96906	MS35489-78	GROMMET,NONMETALLIC	1
18	PAOZZ	96906	MS35206-263	SCREW,MACHINE	1
19	PAOZZ	96906	MS35335-32	WASHER,LOCK	1
20	PAOZZ	19207	12335091	LEAD,ELECTRICAL	1
21	PAOZZ	96906	MS35489-107	GROMMET,NONMETALLIC	1
22	PAOZZ	96906	MS16997-31L	SCREW,SELF-LOCKING	4
23	PAOOO	19207	12357230	CABLE ASSEMBLY,SPEC	1

END OF FIGURE

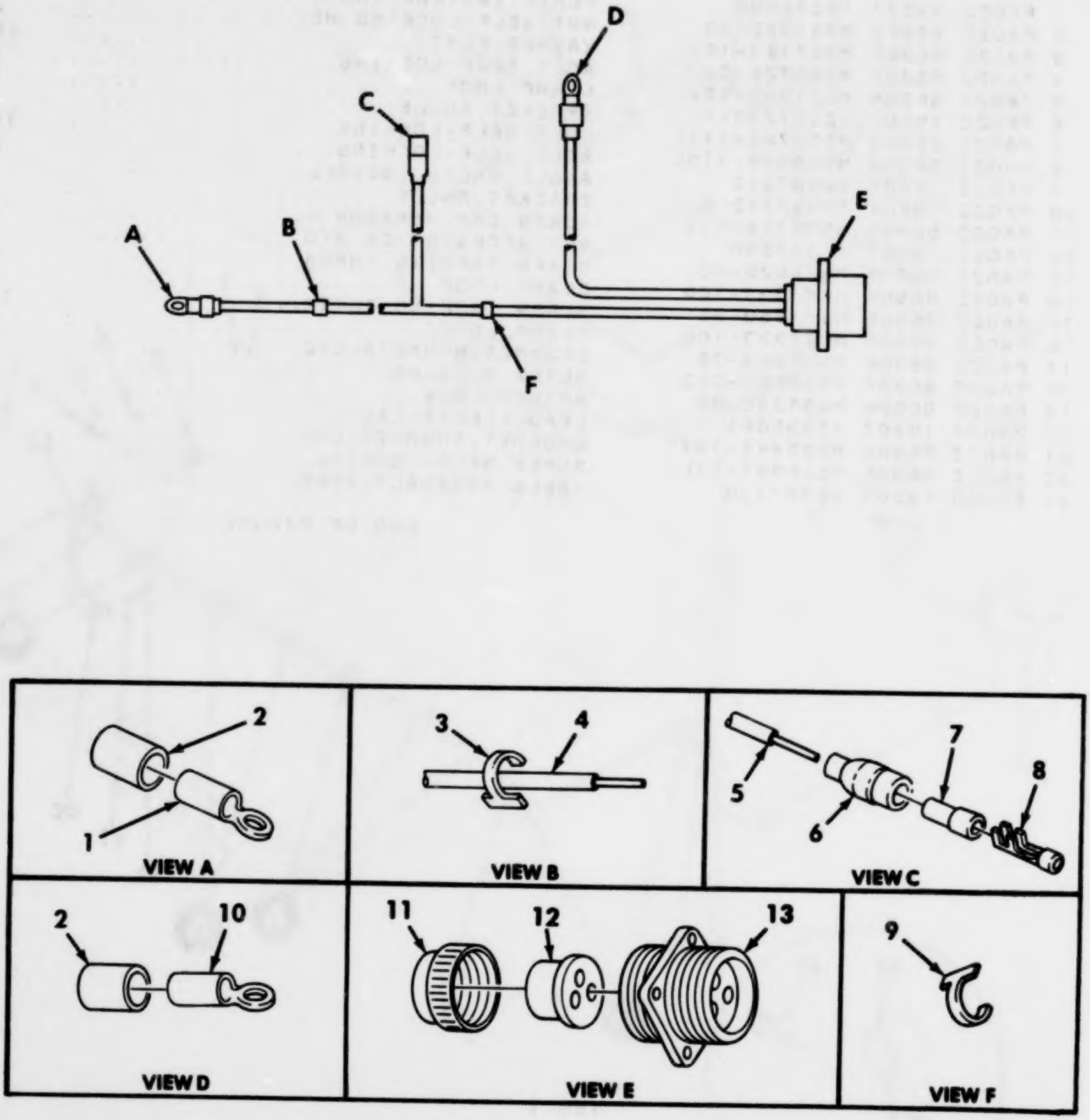

Figure 160. Radio Box Wiring Harness.

(1) ITEM NO	(2) SMR CODE	(3) CAGEC	(4) PART NUMBER	(5) DESCRIPTION AND USABLE ON CODES(UOC)	(6) QTY
				GROUP AW: RADIO EQUIPMENT INSTALLATION FIG.160 RADIO BOX WIRING HARNESS	
1	PAOZZ	19207	7056715	.TERMINAL,LUG........................	1
2	MOOZZ	81349	M23053/5-108-0AR	.INSULATION SLEEVING MAKE FROM INSULATION SLEEVING,P/N M23053/5-108-0................................	V
3	PAOZZ	81349	M43436/1-1	.BAND,MARKER.........................	4
4	MOOZZ	81349	M13486/1-9AR	.WIRE,ELECTRICAL MAKE FROM ELECTRICAL WIRE,P/N M13486/1-9......	V
5	MOOZZ	81349	M13486/1-5AR	.WIRE,ELECTRICAL MAKE FROM ELECTRICAL WIRE,P/N M13486/1-5......	V
6	PAOZZ	19207	8338561	.SHELL,ELECTRICAL CO................	1
7	PAOZZ	19207	8338562	.INSULATOR,BUSHING..................	1
8	PAOZZ	19207	8338564	.TERMINAL ASSEMBLY..................	1
9	PAOZZ	81349	M43436/1-3	.BAND,MARKER.........................	1
10	PAOZZ	19207	7056712	.TERMINAL,LUG........................	1
11	PAOZZ	19207	7723308	.NUT,BUSHING RETAINE................	1
12	PAOZZ	19207	7524564	.GROMMET,NONMETALLIC................	1
13	PAOZZ	19207	7722352	.CONNECTOR,RECEPTACL................	1

END OF FIGURE

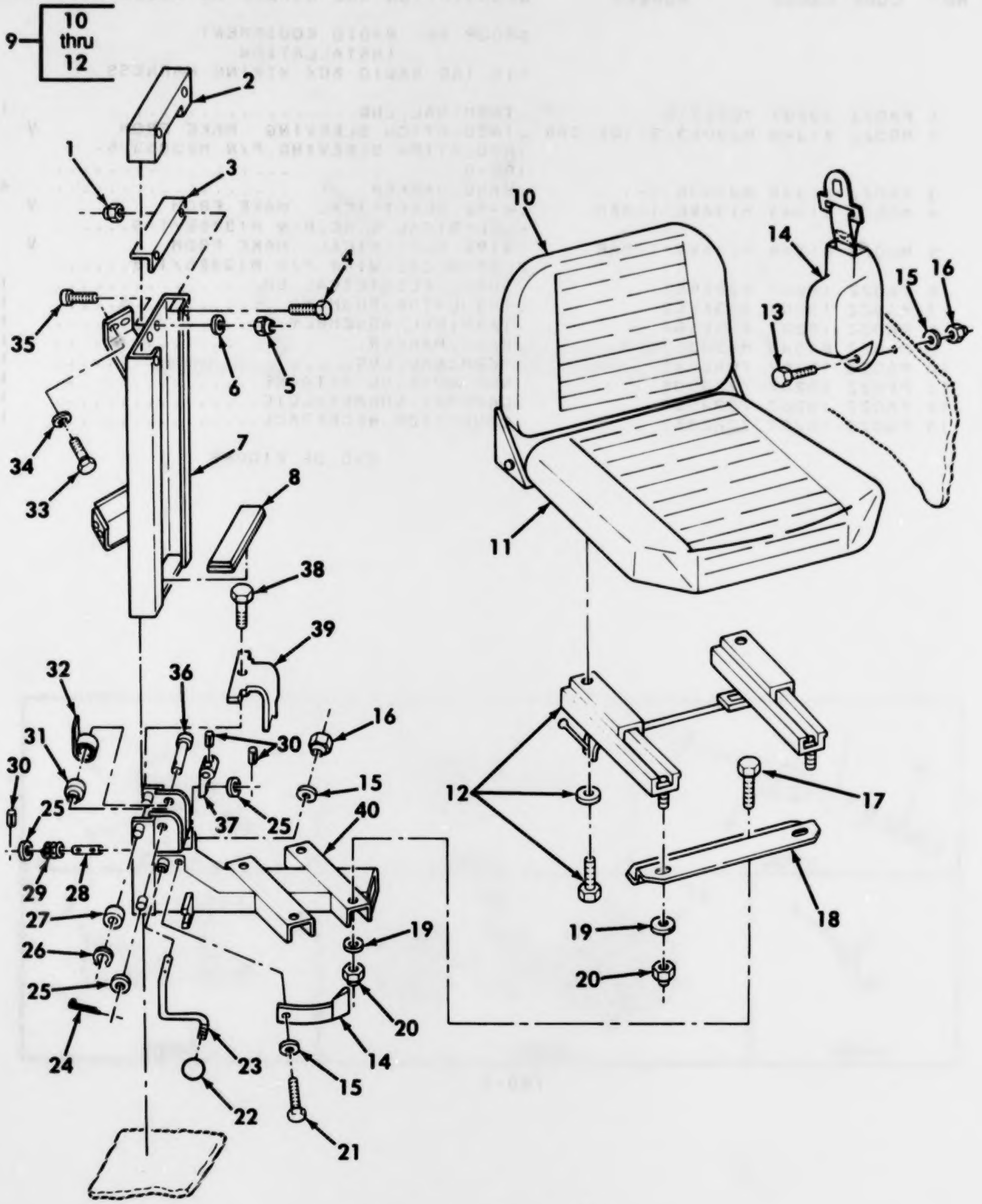

Figure 161. Seat Installation.

(1) ITEM NO	(2) SMR CODE	(3) CAGEC	(4) PART NUMBER	(5) DESCRIPTION AND USABLE ON CODES(UOC)	(6) QTY
				GROUP AX: SEAT INSTALLATION	
				FIG.161 SEAT INSTALLATION	
1	PAOZZ	96906	MS17829-5F	NUT,SELF-LOCKING,HE..................	2
2	PFOZZ	97403	13214E2073	COVER,SEAT POST......................	1
3	PFOZZ	97403	13214E2069	BRACKET,ANGLE SEAT POST............	1
4	PAOZZ	96906	MS90726-33	SCREW,CAP,HEXAGON H..................	2
5	PAOZZ	96906	MS17829-4F	NUT,SELF-LOCKING,HE..................	2
6	PAOZZ	96906	MS27183-10	WASHER,FLAT..........................	2
7	PFOZZ	19207	12334775	POST,SEAT............................	1
8	PAOZZ	97403	13214E2070	PAD,CUSHIONING SEAT................	1
9	PAOOO	09704	133166	SEAT,VEHICULAR.......................	1
10	PAOZZ	09704	130124	.CUSHION,SEAT BACK,V SEAT..........	1
11	PAOZZ	09704	130063	.CUSHION,SEAT,VEHICU................	1
12	PAOZZ	09704	101286	.PARTS KIT,SEAT SLIDE RAIL,SEAT....	1
13	PAOZZ	96906	MS18153-88	SCREW,CAP,HEXAGON H..................	1
14	PAOZZ	19207	12300495	BELT,VEHICULAR SAFE..................	1
15	PAOZZ	96906	MS27183-16	WASHER,FLAT..........................	3
16	PAOZZ	96906	MS17829-7F	NUT,SELF-LOCKING,HE..................	2
17	PAOZZ	96906	MS90725-34	SCREW,CAP,HEAGON H...................	4
18	PFOZZ	19207	12332471	SUPPORT,SEAT,VEHICU SEAT............	2
19	PAOZZ	96906	MS27183-12	WASHER,FLAT..........................	8
20	PAOZZ	96906	MS17829-5C	NUT,SELF-LOCKING,HE..................	8
21	PAOZZ	96906	MS90726-99	SCREW,CAP,HEXAGON H..................	1
22	PFOZZ	72512	55M	KNOB.................................	1
23	PFOZZ	97403	13211E8970	LEVER,MANUAL CONTRO SEAT...........	1
24	PAOZZ	96906	MS24665-285	PIN,COTTER...........................	1
25	PAOZZ	96906	MS27183-18	WASHER,FLAT..........................	3
26	PAOZZ	96906	MS16624-1050	RING,RETAINING.......................	4
27	PAOZZ	97403	13214E2074	ROLLER ASSY SEAT....................	4
28	PFOZZ	97403	13214E2072	PIN,STRAIGHT,HEADLE SEAT LOCK......	1
29	PAOZZ	97403	13214E2068	SPRING,HELICAL,COMP..................	1
30	PAOZZ	96906	MS171534	PIN,SPRING...........................	4
31	PFOZZ	19207	12335459	SPOOL,SPRING SEAT ADJUSTING........	1
32	PAOZZ	80545	N3508	SPRING,SPIRAL,TORSI..................	2
33	PAOZZ	96906	MS90728-60L	BOLT,SELF-LOCKING....................	4
34	PAOZZ	96906	MS27183-14	WASHER,FLAT..........................	4
35	PAOZZ	96906	MS35191-291	SCREW,MACHINE........................	2
36	PAOZZ	96906	MS20392-7C87	PIN,STRAIGHT,HEADED..................	1
37	PFOZZ	97403	13214E2067	CAM,CONTROL SEAT....................	1
38	PAOZZ	96906	MS90728-3L	BOLT,SELF-LOCKING....................	1
39	PFOZZ	97403	13214E2071	COVER,ACCESS SEAT SPRING SPOOL.....	1
40	PFOZZ	19207	12334776	SUPPORT,SEAT,VEHICU..................	1

END OF FIGURE

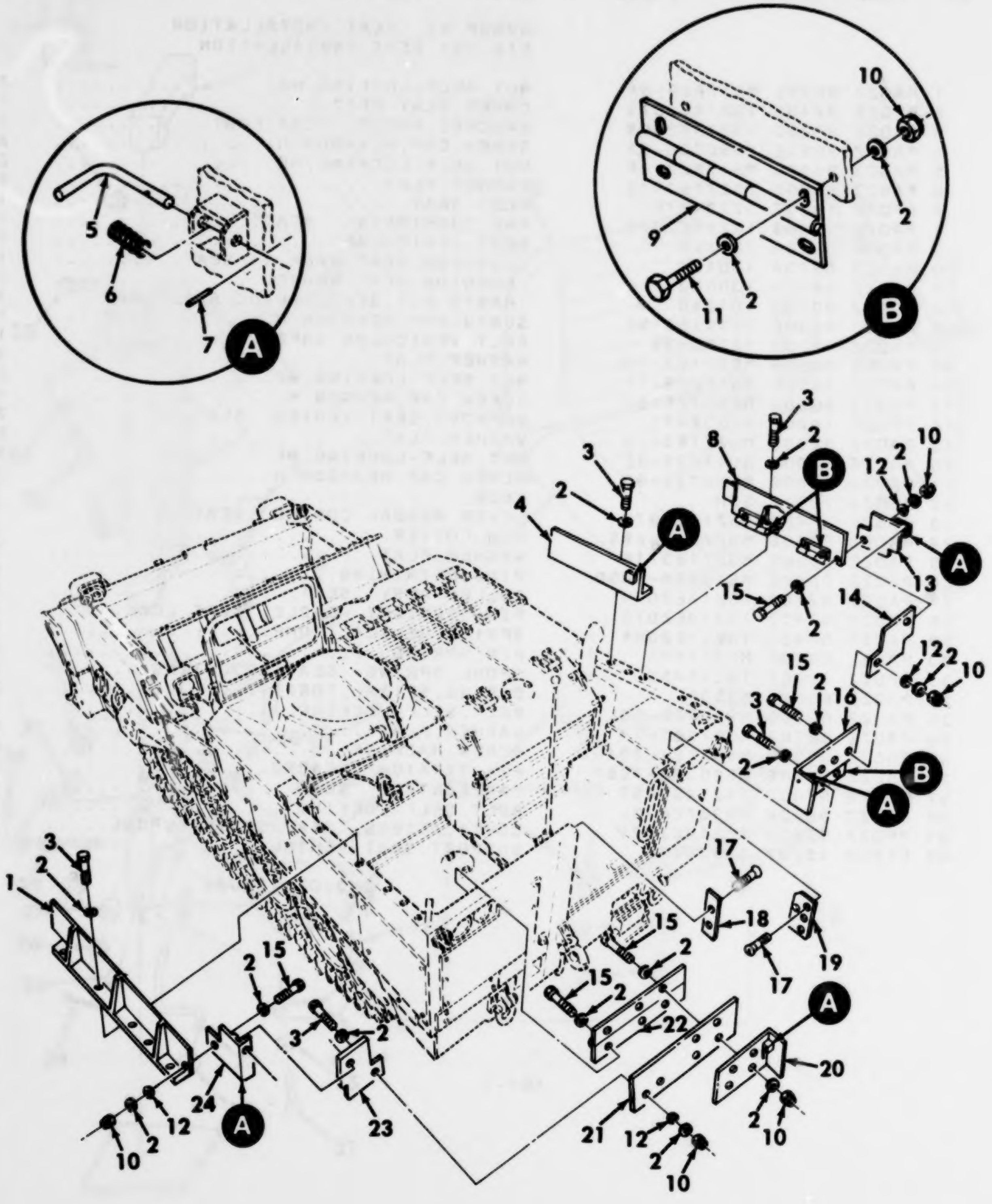

Figure 162. Splash Shield Installation

(1) ITEM NO	(2) SMR CODE	(3) CAGEC	(4) PART NUMBER	(5) DESCRIPTION AND USABLE ON CODES(UOC)	(6) QTY
				GROUP AZ: SPLASH SHIELD INSTALLATION FIG. 162 SPLASH SHIELD INSTALLATION	
1	PFOZZ	19207	12334851	SHIELD, LEFT SPLASH..................	1
2	PAOZZ	96906	MS27183-14	WASHER, FLAT..........................	47
3	PAOZZ	96906	MS90728-59L	BOLT, SELF-LOCKING....................	17
4	PFOZZ	19207	12334852	SHIELD, RIGHT SPLASH..................	1
5	PAOZZ	19207	12334859	PIN, LOCK.............................	5
6	PAOZZ	96906	MS24585-1363	SPRING, HELICAL, COMP.................	5
7	PAOZZ	96906	MS171592	PIN, SPRING...........................	5
8	PFOZZ	19207	12325730	SHIELD ASSEMBLYH......................	1
9	MOOZZ	19207	12334860	HINGE ASSY MAKE FROM HINGE, P/N MS35831-6A...........................	3
10	PAOZZ	96906	MS51922-17	NUT, SELF-LOCKING, HE.................	15
11	PAOZZ	96906	MS90728-60	BOLT, SELF-LOCKING....................	7
12	PAOZZ	19207	12334863	WASHER, SADDLE........................	4
13	PFOZZ	19207	12355538	PLATE ASSEMBLY........................	1
14	PFOZZ	19207	12357199	PLATE.................................	1
15	PAOZZ	96906	MS90728-62	SCREW, CAP, HEXAGON H.................	8
16	PFOZZ	19207	12334854	SHIELD, REAR SPLASH...................	1
17	PAOZZ	96906	MS24667-52L	SCREW, SELF-LOCKING...................	4
18	PFOZZ	19207	12357221	PLATE, MENDING........................	1
19	PFOZZ	19207	12355301	PLATE, ALUMINUM.......................	1
20	PFOZZ	19207	12352563	SHIELD, SPLASH, VEHIC.................	1
21	PFOZZ	19207	12357244	SHIELD, SPLASH, VEHIC.................	1
22	MOOZZ	19207	12352561	HINGE MAKE FROM HINGE, P/N MS35831-6A.....................................	1
23	PFOZZ	19207	12357200	PLATE, REAR SPLASH....................	1
24	PFOZZ	19207	12357198	PLATE ASSEMBLY........................	1

END OF FIGURE

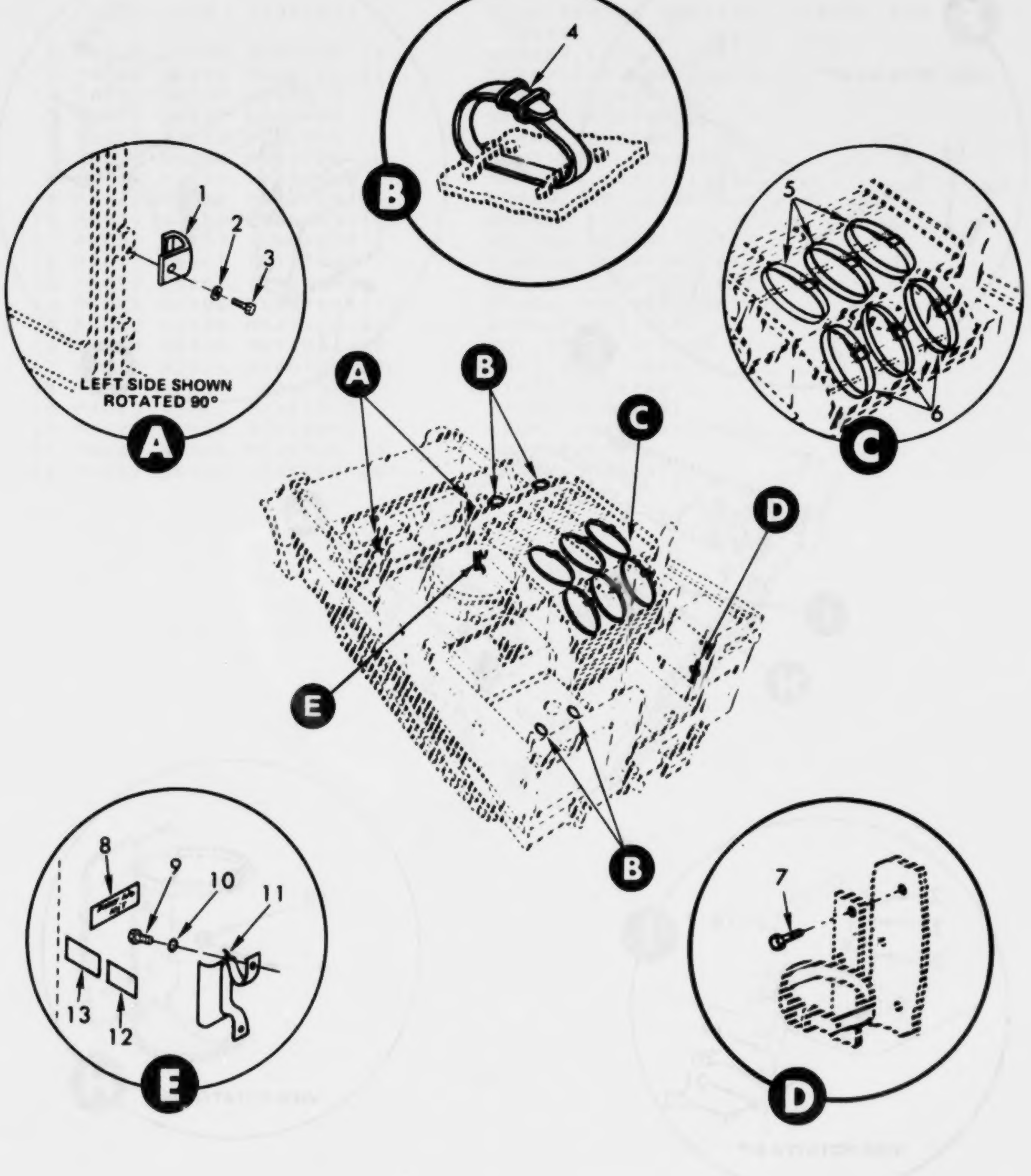

Figure 163. Stowage Installation (Sheet 1 of 2).

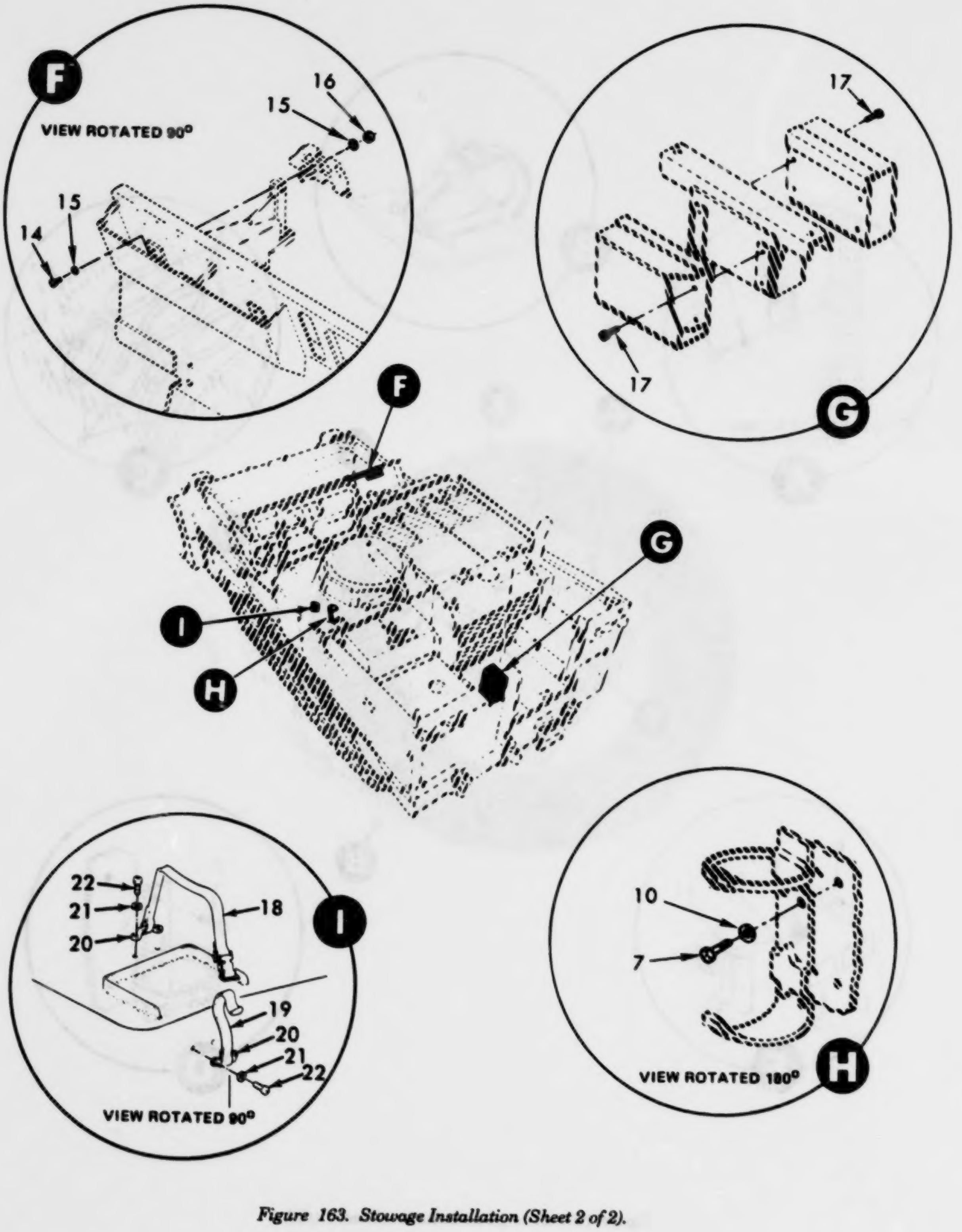

Figure 163. Stowage Installation (Sheet 2 of 2).

(1) ITEM NO	(2) SMR CODE	(3) CAGEC	(4) PART NUMBER	(5) DESCRIPTION AND USABLE ON CODES(UOC)	(6) QTY
				GROUP A2: STOWAGE INSTALLATION	
				FIG.163 STOWAGE INSTALLATION	
1	PAOZZ	19207	12357273	CLIP,SPRING TENSION CANOPY BOW STOWAGE..........	2
2	PAOZZ	96906	MS35338-46	WASHER,LOCK..........	2
3	PAOZZ	96906	MS90728-58	SCREW,CAP,HEXAGON H..........	2
4	PAOZZ	19207	8690476	STRAP,WEBBING..........	4
5	PAOZZ	19207	8690490	STRAP,WEBBING..........	3
6	PAOZZ	19207	8690485	STRAP,WEBBING..........	3
7	PAOZZ	96906	MS90728-3L	BOLT,SELF-LOCKING..........	7
8	PAOZZ	19207	12357349	MARKER,IDENTIFICATI..........	1
9	PAOZZ	96906	MS90728-6	SCREW,CAP,HEXAGON H..........	2
10	PAOZZ	96906	MS27183-10	WASHER,FLAT..........	6
11	PFOZZ	19207	10901079	HOLDER,FLASHLIGHT..........	1
12	PAOZZ	19207	12357347	MARKER,IDENTIFICATI..........	1
13	PAOZZ	19207	12357348	MARKER,IDENTIFICATI..........	1
14	PFOZZ	96906	MS90728-172	SCREW,CAP,HEXAGON H..........	2
15	PAOZZ	96906	MS27183-22	WASHER,FLAT..........	4
16	PAOZZ	96906	MS51922-49	NUT,SELF-LOCKING,HE..........	2
17	PAOZZ	96906	MS90728-58L	BOLT,SELF-LOCKING..........	8
18	PAOZZ	19207	12357376	STRAP,WEBBING..........	1
19	PAOZZ	19207	12357375	STRAP,WEBBING..........	1
20	PAOZZ	96906	MS51939-1	LOOP,STRAP FASTENER..........	2
21	PAOZZ	96906	MS35338-43	WASHER,LOCK..........	4
22	PAOZZ	96906	MS35206-261	SCREW,MACHINE..........	4

END OF FIGURE

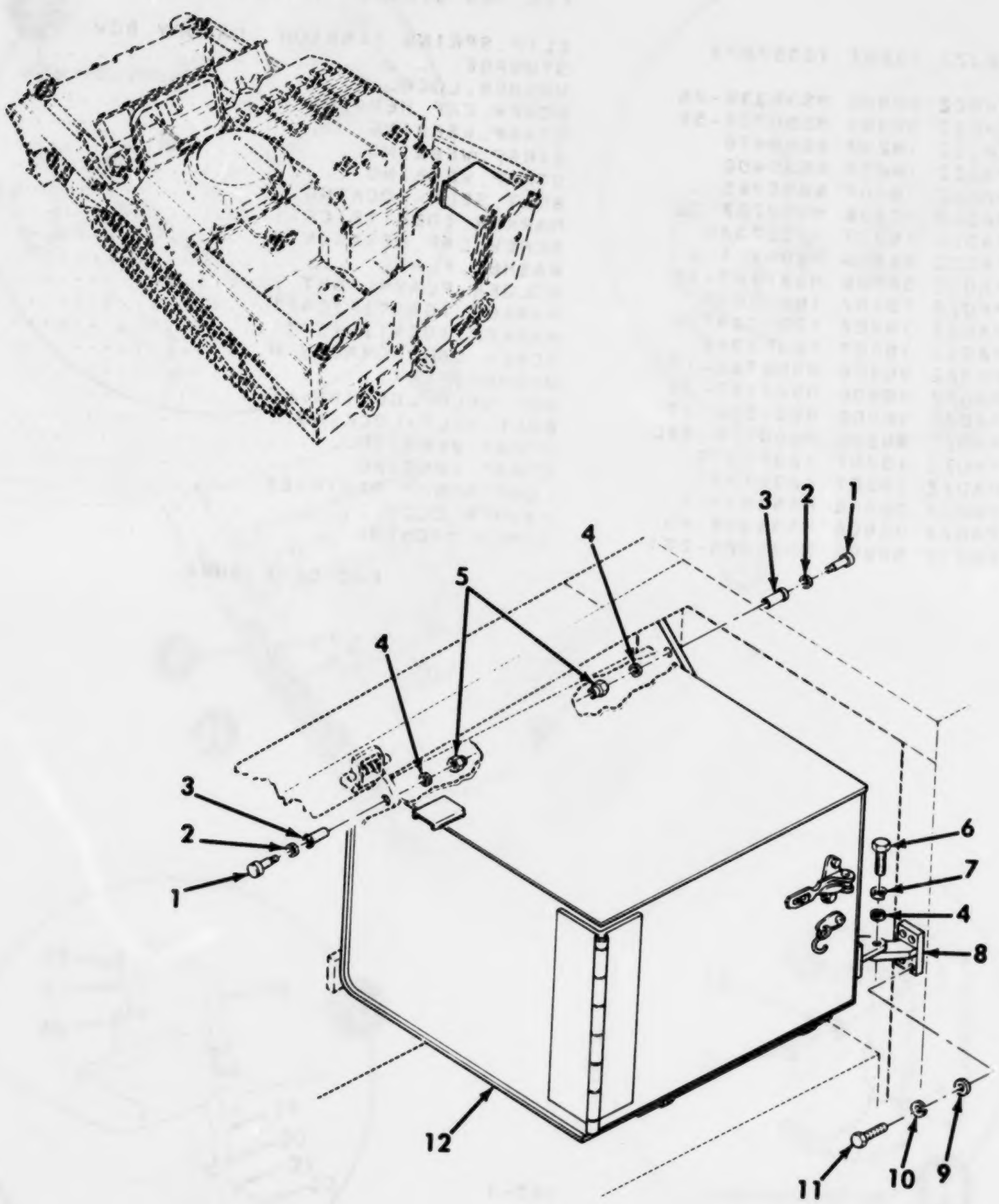

Figure 164. Hull Stowage Box and Mounting Parts.

(1) ITEM NO	(2) SMR CODE	(3) CAGEC	(4) PART NUMBER	(5) DESCRIPTION AND USABLE ON CODES(UOC)	(6) QTY
				GROUP A2: STOWAGE INSTALLATION FIG.164 HULL STOWAGE BOX AND MOUNTING PARTS	
1	PAOZZ	96906	MS51975-32	SCREW,SHOULDER	2
2	PAOZZ	96906	MS27183-18	WASHER,FLAT	2
3	PAOZZ	96906	MS17796-63	BEARING,SLEEVE	2
4	PAOZZ	96906	MS27183-14	WASHER,FLAT	3
5	PAOZZ	96906	MS51922-17	NUT,SELF-LOCKING,HE	2
6	PAOZZ	96906	MS18154-60	SCREW,CAP,HEXAGON H	1
7	PAOZZ	96906	MS35338-46	WASHER,LOCK	1
8	PAOZZ	19207	12357263	BRACKET,HULL ASSEMB	1
9	PAOZZ	96906	MS27183-10	WASHER,FLAT	4
10	PAOZZ	02614	N405P41B6	WASHER,LOCK	4
11	PAOZZ	96906	MS90728-7	SCREW,CAP,HEXAGON H	4
12	PAOFF	19207	12357266	BOX,ACCESSORIES STO	1

END OF FIGURE

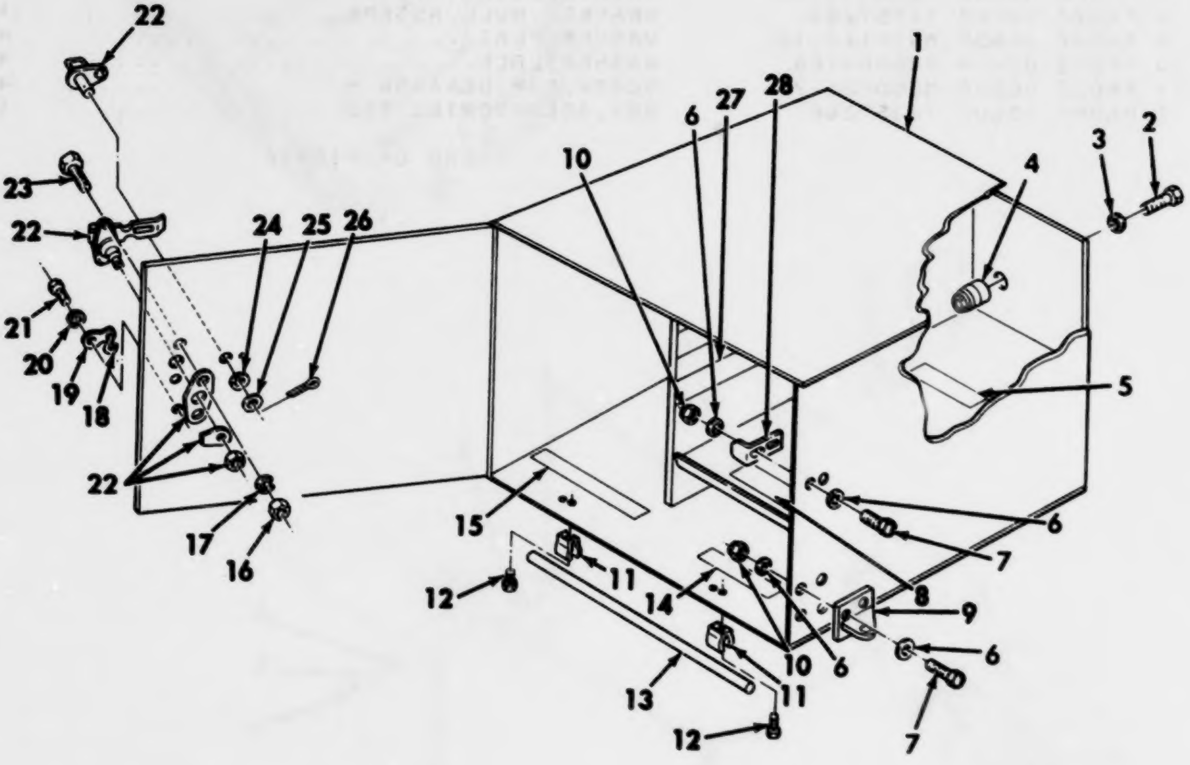

Figure 165. Hull Stowage Box Assembly.

(1) ITEM NO	(2) SMR CODE	(3) CAGEC	(4) PART NUMBER	(5) DESCRIPTION AND USABLE ON CODES(UOC)	(6) QTY
				GROUP A2: STOWAGE INSTALLATION	
				FIG.165 HULL STOWAGE BOX ASSEMBLY	
1	PFOFF	19207	12357265	.BOX,STOWAGE	1
2	PAOZZ	96906	MS90728-111L	.BOLT,SELF-LOCKING	1
3	PAOZZ	96906	MS27183-18	.WASHER,FLAT	1
4	PAOZZ	19207	12357341	.COUPLING,BOX ASSEMB	1
5	PAOZZ	19207	12357345	.MARKER,IDENTIFICATI	1
6	PAOZZ	96906	MS27183-10	.WASHER,FLAT	12
7	PAOZZ	96906	MS90727-8	.SCREW,CAP,HEXAGON H	6
8	PAOZZ	19207	12357344	.MARKER,IDENTIFICATI	1
9	PAOZZ	19207	12357264	.PAD EYE	1
10	PAOZZ	96906	MS21044N4	.NUT,SELF-LOCKING,HE	6
11	PAOZZ	81349	M24066/2-324	.CLIP,SPRING TENSION	2
12	PAOZZ	96906	MS51851-13	.SCREW,TAPPING THREA	2
13	PAOZZ	19207	12357193	.BAR,METAL	1
14	PAOZZ	19207	12357350	.MARKER,IDENTIFICATI	1
15	PAOZZ	19207	12357338	.MARKER,IDENTIFICATI	1
16	PAOZZ	96906	MS35649-202	.NUT,PLAIN,HEXAGON	2
17	PAOZZ	96906	MS35338-43	.WASHER,LOCK	2
18	PAOZZ	96906	MS87006-23	.HOOK,CHAIN,S	1
19	PAOZZ	19207	12334724-1	.TAB	1
20	PAOZZ	96906	MS27183-42	.WASHER,FLAT	1
21	PAOZZ	96906	MS24629-44	.SCREW,TAPPING,THREA	1
22	PFOZZ	19207	12369103	.LATCH,DOOR,VEHICULA	1
23	PAOZZ	96906	MS35207-266	.SCREW,MACHINE	2
24	PAOZZ	96906	MS27183-12	.WASHER,FLAT	1
25	PAOZZ	96906	MS9549-11	.WASHER,FLAT .028-.036	V
26	PAOZZ	96906	MS24665-132	.PIN,COTTER	1
27	PAOZZ	19207	12357346	.MARKER,IDENTIFICATI	1
28	PAOZZ	19207	12357269	.BRACKET,ANGLE	1

END OF FIGURE

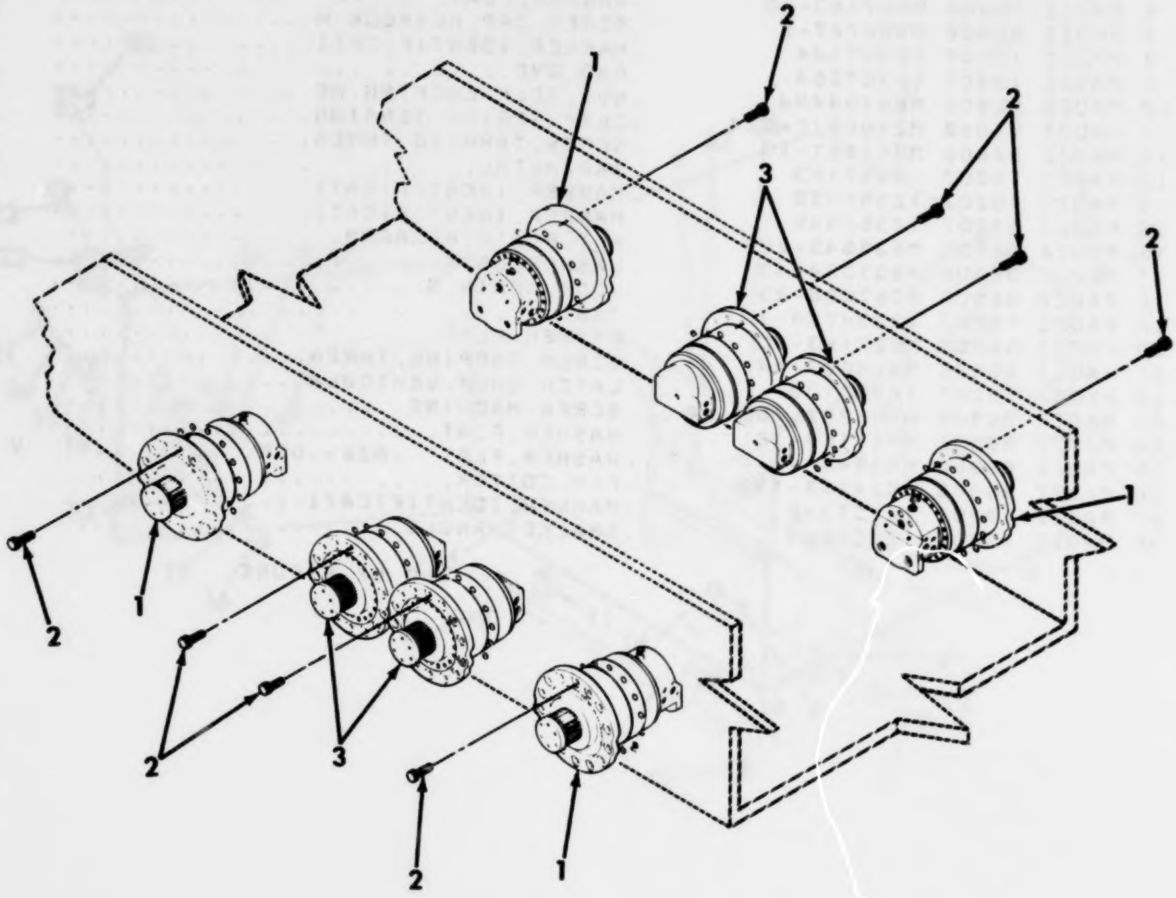

Figure 166. Hydraulic Actuators Installation.

(1) ITEM NO	(2) SMR CODE	(3) CAGEC	(4) PART NUMBER	(5) DESCRIPTION AND USABLE ON CODES(UOC)	(6) QTY
				GROUP A3: SUSPENSION INSTALLATION FIG.166 HYDRAULIC ACTUATORS INSTALLATION	
1	PAFDD	97403	13204E2560	ACTUATOR,HYDRAULIC- CORNER.........	4
2	PAFZZ	96906	MS35764-1521	SCREW,CAP HEXAGON H.................	112
3	PAFDD	97403	13204E2561	ACTUATOR,HYDRAULIC- INTERMEDIATE...	4

END OF FIGURE

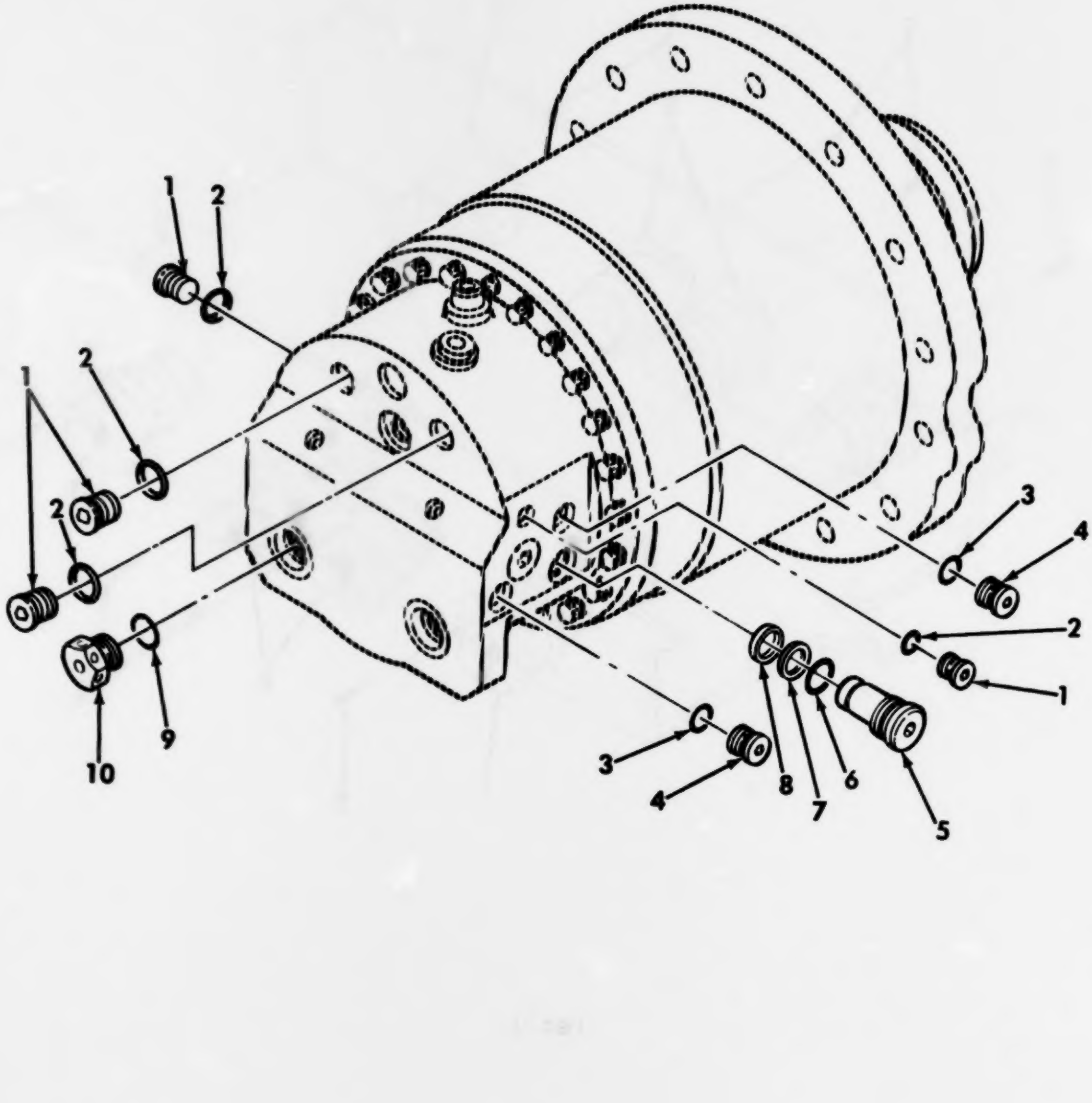

Figure 167. Corner Suspension Unit 1L.

(1) ITEM NO	(2) SMR CODE	(3) CAGEC	(4) PART NUMBER	(5) DESCRIPTION AND USABLE ON CODES(UOC)	(6) QTY
				GROUP A3: SUSPENSION INSTALLATION FIG.167 CORNER SUSPENSION UNIT 1L	
1	PAFZZ	19207	12335054-2	PLUG,MACHINE THREAD..................	5
2	PAFZZ	96906	MS28778-4	PACKING,PREFORMED PART OF KIT P/N 5705559............................	4
3	PAFZZ	96906	MS28778-8	PACKING,PREFORMED PART OF KIT P/N 5705559............................	2
4	PAFZZ	19207	12335054-5	PLUG,MACHINE THREAD..................	4
5	PAFZZ	19207	12335135	PLUG,MACHINE THREAD..................	2
6	PAFZZ	96906	MS28778-12	PACKING,PREFORMED PART OF KIT P/N 5705559............................	1
7	PAFZZ	19207	12335136	RETAINER,PACKING PART OF KIT P/N 5705559............................	1
8	PAFZZ	16954	691-10014	GASKET PART OF KIT P/N 5705559......	2
9	PAFZZ	96906	MS28778-14	PACKING,PREFORMED PART OF KIT P/N 5705559............................	2
10	PAFZZ	97403	13214E2559	PLUG,MACHINE THREAD..................	2

END OF FIGURE

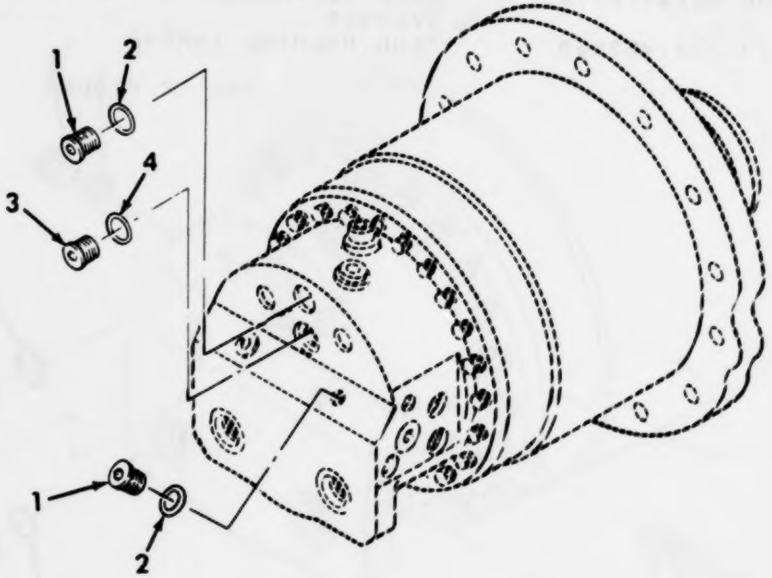

Figure 168. Corner Actuator – Shipping Plugs.

(1) ITEM NO	(2) SMR CODE	(3) CAGEC	(4) PART NUMBER	(5) DESCRIPTION AND USABLE ON CODES(UOC)	(6) QTY
				GROUP A3: SUSPENSION INSTALLATION FIG.168 CORNER ACTUATOR- SHIPPING PLUGS	
1	PAFZZ	19207	12335054-4	PLUG,MACHINE THREAD..................	3
2	PAFZZ	96906	MS28778-6	PACKING,PREFORMED....................	3
3	PAFZZ	19207	12335054-5	PLUG,MACHINE THREAD..................	1
4	PAFZZ	96906	MS28778-8	PACKING,PREFORMED....................	1

END OF FIGURE

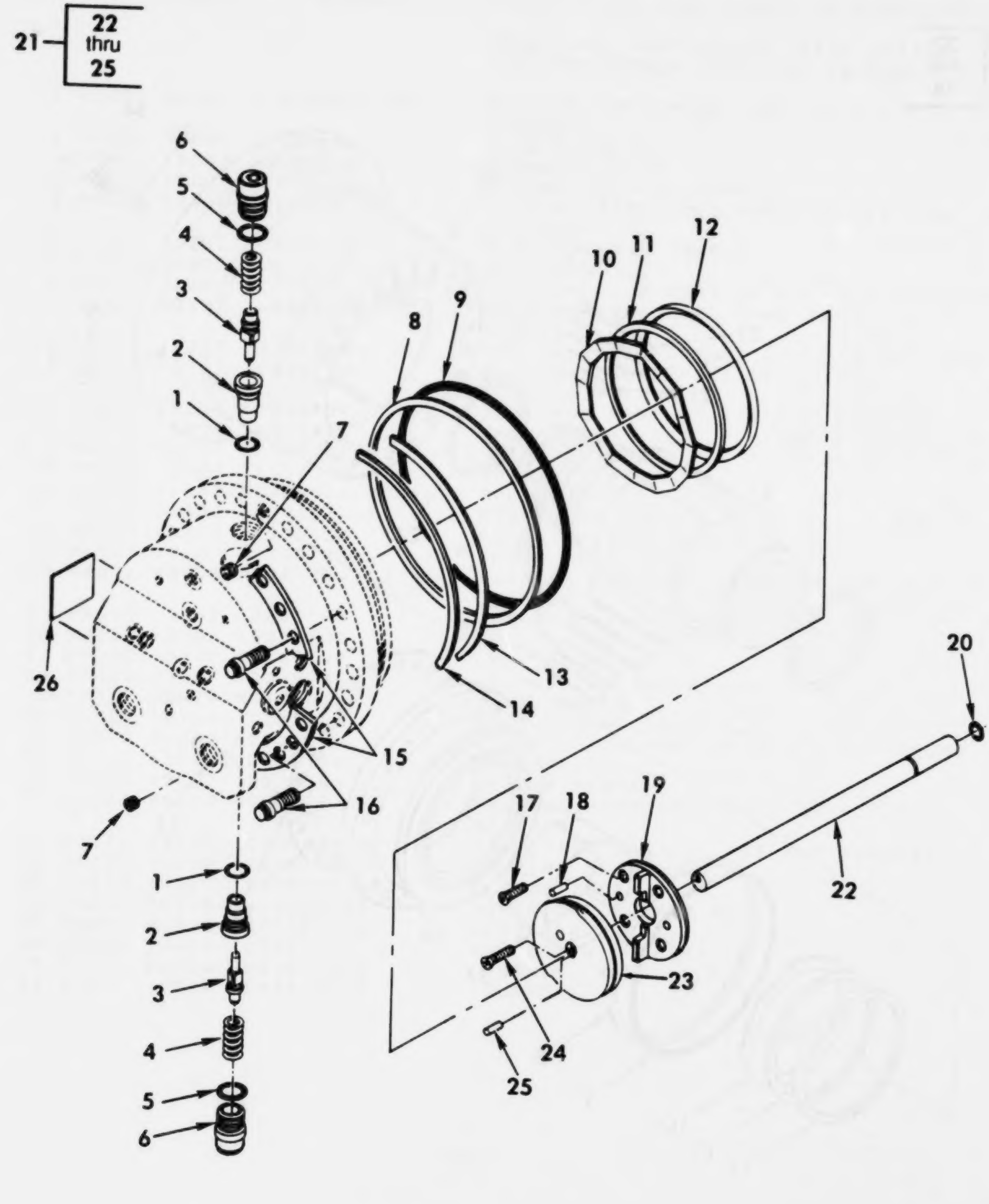

Figure 169. Corner Actuator Assembly (Sheet 1 of 2).

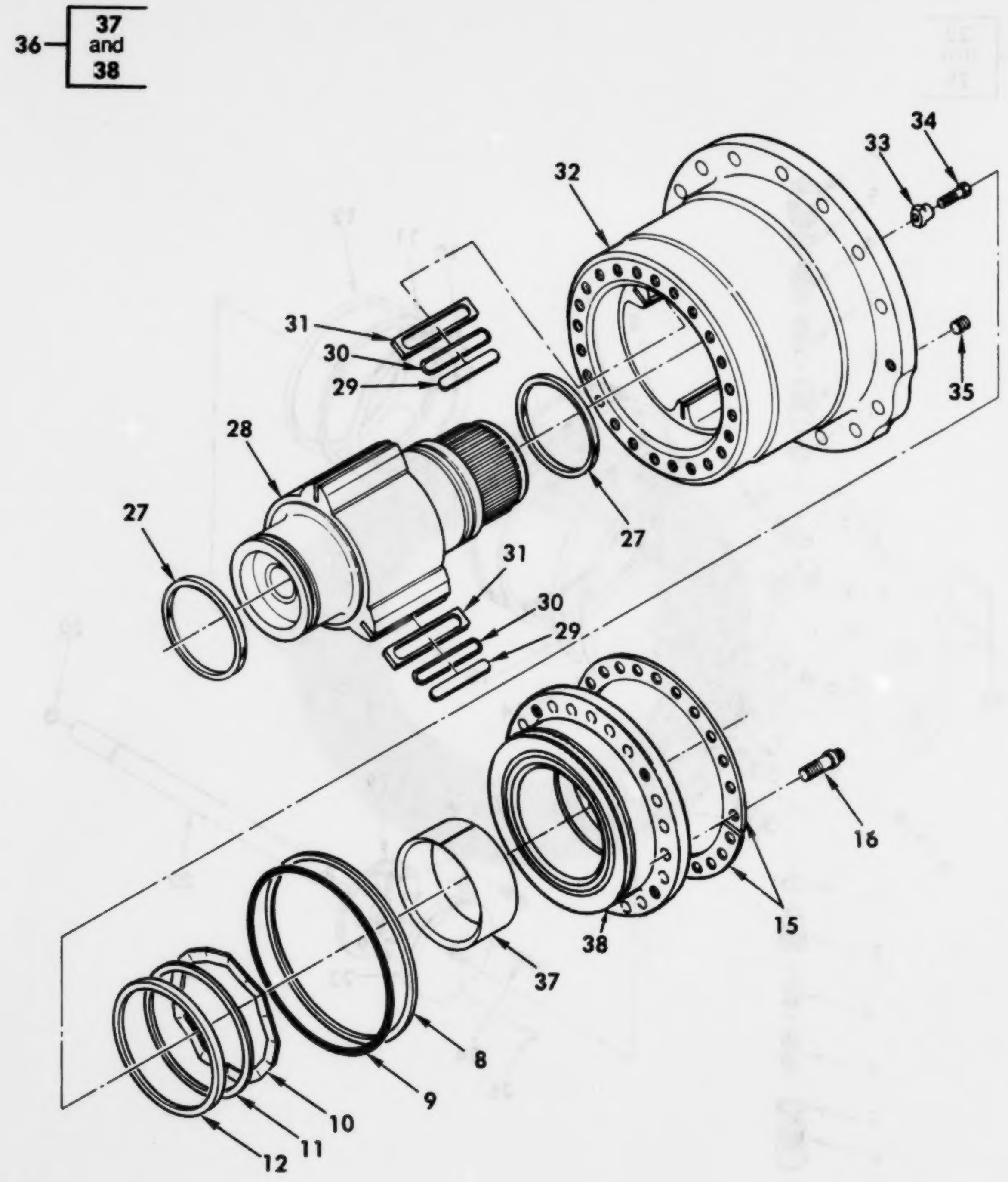

Figure 169. Corner Actuator Assembly (Sheet 2 of 2).

(1) ITEM NO	(2) SMR CODE	(3) CAGEC	(4) PART NUMBER	(5) DESCRIPTION AND USABLE ON CODES(UOC)	(6) QTY
				GROUP A3: SUSPENSION INSTALLATION FIG.169 CORNER ACTUATOR ASSEMBLY	
1	KDDZZ	02697	2-015N552-90	PACKING,PREFORMED PART OF KIT P/N 5705559..............................	2
2	PFDZZ	19207	12335138	SLEEVE,VALVE........................	2
3	PADZZ	19207	12335139	PLUNGER,VALVE.......................	2
4	PADZZ	19207	12335141	SPRING,HELICAL,COMP.................	2
5	PADZZ	96906	MS28778-10	PACKING,PREFORMED PART OF KIT P/N 5705559..............................	2
6	PFDZZ	19207	12335140	PLUG,MACHINE THREAD.................	2
7	PADZZ	96906	MS51963-153	SETSCREW............................	2
8	KDDZZ	19207	12335161	RING,BACK UP PART OF KIT P/N 5705559	2
9	KDDZZ	02697	2-266N552-90	PACKING,PREFORMED PART OF KIT P/N 5705559..............................	2
10	KDDZZ	19207	12335159	SPRING,WAVE PART OF KIT P/N 5705559.	2
11	KDDZZ	19207	12335158	RING,HUB SEAL PART OF KIT P/N 5705559..............................	2
12	KDDZZ	19207	12335157	SEAL,HUB PART OF KIT P/N 5705559....	2
13	PADZZ	19207	12335162-1	SHIM .004 PART OF KIT P/N 5705559..	V
14	PADZZ	19207	12335162-2	SHIM .010 PART OF KIT P/N 5705559..	V
15	PFDZZ	19207	12335143	SPACER,PLATE........................	4
16	PAFZZ	81349	M24240/3-20812	BOLT,MACHINE........................	46
17	PADZZ	96906	MS24667-51	SCREW,CAP,SOCKET HE.................	4
18	PADZZ	19207	12335150	PIN,STRAIGHT,HEADLE.................	2
19	PFDZZ	19207	12335149	PLATE,MOUNTING......................	1
20	PADZZ	96906	MS28775-113	PACKING,PREFORMED PART OF KIT P/N 5705559..............................	1
21	PADDD	19207	12335145	CAM ASSEMBLY,CORNER.................	1
22	XADZZ	19207	12335147	.ROD,INDEX..........................	1
23	PFDZZ	19207	12335146	.CAM,CONTROL........................	1
24	PADZZ	19207	12335148	.SCREW,CAP,SOCKET HE................	1
25	PADZZ	96906	MS16562-62	.PIN,SPRING.........................	1
26	PFDZZ	19207	12335142	PLATE,IDENTIFICATIO.................	1
27	KDDZZ	75370	B2732	RING,PISTON PART OF KIT P/N 5705559.	2
28	PFDZZ	19207	12335153	WINGSHAFT...........................	1
29	PADZZ	19207	12335163	SPACER,PLATE........................	6
30	PADZZ	96906	MS28775-149	PACKING,PREFORMED PART OF KIT P/N 5705559..............................	6
31	KDDZZ	19207	12335164	SEAL,VANE PART OF KIT P/N 5705559...	6
32	PFDZZ	19207	12335144	HOUSING,MECHANICAL..................	1
33	PADZZ	19207	12335151	FLANGE,INDEX........................	1
34	PADZZ	96906	MS16998-76	SCREW,CAP,SOCKET HE.................	1
35	PADZZ	96906	MS51965-92	SETSCREW............................	2
36	PFDDD	19207	12335154	SUPPORT,WINGSHAFT...................	1
37	PADZZ	26124	SX2151-076	.BUSHING,SLEEVE.....................	1
38	XADZZ	19207	12335154-1	.SUPPORT............................	1

END OF FIGURE

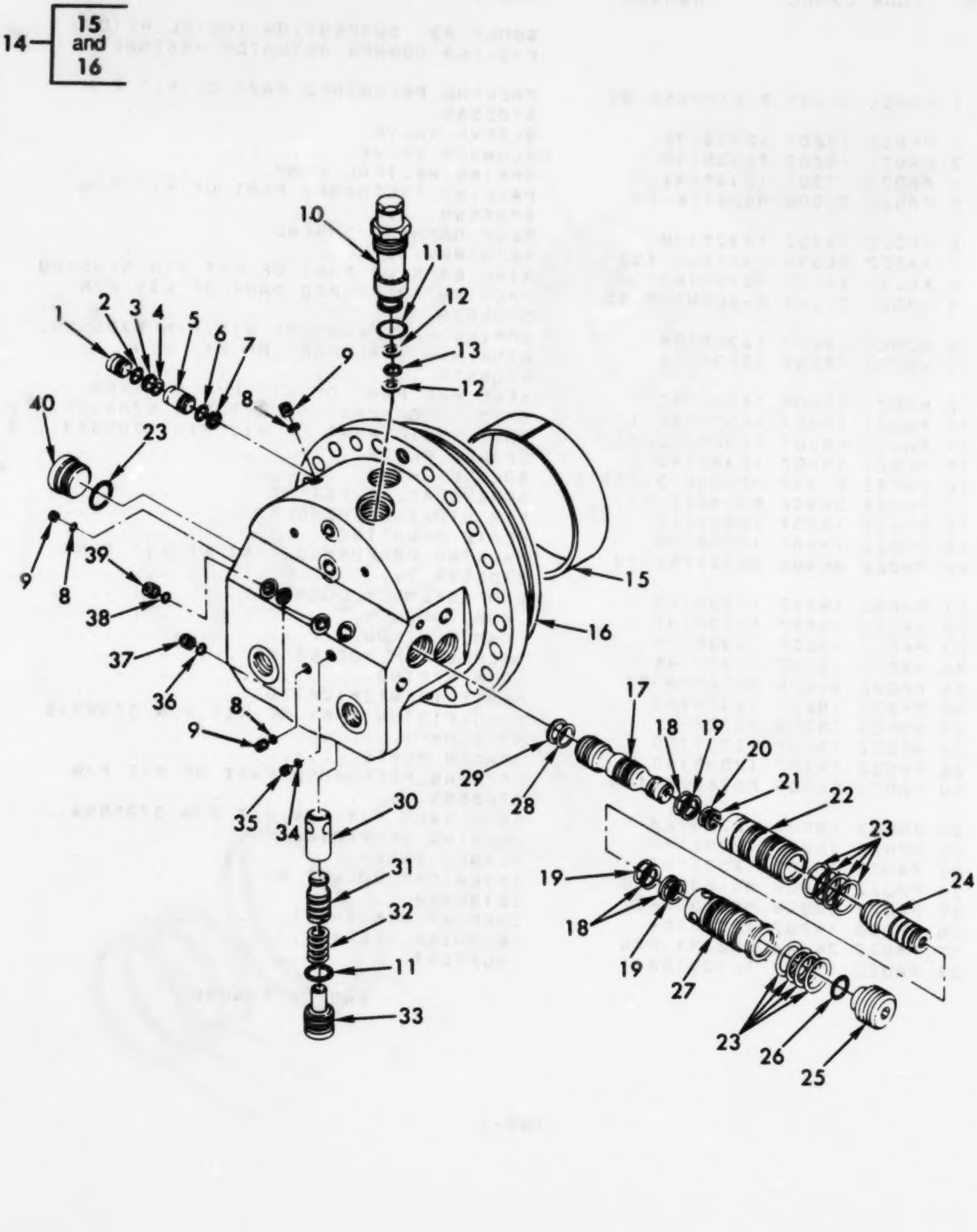

Figure 170. Corner Actuator – Manifold.

(1) ITEM NO	(2) SMR CODE	(3) CAGEC	(4) PART NUMBER	(5) DESCRIPTION AND USABLE ON CODES(UOC)	(6) QTY
				GROUP A3: SUSPENSION INSTALLATION FIG.170 CORNER ACTUATOR- MANIFOLD	
1	PADZZ	19207	12335172	PLUG,MACHINE THREAD................	1
2	PADZZ	96906	MS28778-10	PACKING,PREFORMED PART OF KIT P/N 5705559.............................	1
3	PADZZ	19207	12335173-1	WASHER,FLAT........................	1
4	PADZZ	19207	12335173-2	WASHER,FLAT........................	1
5	PADZZ	19207	12335171	VALVE,CHECK........................	1
6	KDDZZ	02697	2-113N552-90	PACKING,PREFORMED PART OF KIT P/N 5705559.............................	1
7	PADZZ	96906	MS28774-113	RETAINER,PACKING PART OF KIT P/N 5705559.............................	1
8	PADZZ	96906	MS28778-4	PACKING,PREFORMED PART OF KIT P/N 5705559.............................	3
9	PAFZZ	19207	12335054-2	PLUG,MACHINE THREAD................	3
10	PADZZ	91816	RV57-11	VALVE,RELIEF,PRESSU................	1
11	PADZZ	96906	MS28778-12	PACKING,PREFORMED PART OF KIT P/N 5705559.............................	2
12	PADZZ	96906	MS28774-111	RETAINER,PACKING PART OF KIT P/N 5705559.............................	2
13	KDDZZ	02697	2-111N552-90	PACKING,PREFORMED PART OF KIT P/N 5705559.............................	1
14	PFDDD	19207	12335168	MANIFOLD,CORNER....................	1
15	PADZZ	26124	SX2151-076	.BUSHING,SLEEVE....................	1
16	XADZZ	19207	12351768-1	.MANIFOLD..........................	1
17	PADZZ	19207	12335178	VALVE,LINEAR,DIRECT................	1
18	PADZZ	97820	S11248-112	RETAINER,PACKING PART OF KIT P/N 5705559.............................	3
19	PADZZ	96906	MS28775-112	PACKING,PREFORMED PART OF KIT P/N 5705559.............................	3
20	PADZZ	96906	MS28775-012	PACKING,PREFORMED PART OF KIT P/N 5705559.............................	1
21	PADZZ	96906	MS28774-012	RETAINER,PACKING PART OF KIT P/N 5705559.............................	1
22	PADZZ	19207	12335175	SLEEVE,WHEEL VALVE.................	1
23	KDDZZ	02697	2-024N552-90	PACKING,PREFORMED PART OF KIT P/N 5705559.............................	9
24	PADZZ	19207	12335177	VALVE,LINEAR,DIRECT................	1
25	PFDZZ	19207	12335180	PLUG,MACHINE THREAD................	1
26	PADZZ	96906	MS28778-8	PACKING,PREFORMED PART OF KIT P/N 5705559.............................	1
27	PADZZ	19207	12335174	SLEEVE,DIRECTIONAL.................	1
28	PADZZ	96906	MS28774-115	RETAINER,PACKING PART OF KIT P/N 5705559.............................	1
29	PADZZ	96906	MS28775-115	PACKING,PREFORMED PART OF KIT P/N 5705559.............................	1
30	PADZZ	19207	12335181	SLEEVE,DIRECTIONAL.................	1
31	PADZZ	19207	12335183	BODY,VALVE.........................	1
32	PADZZ	19207	12335184	SPRING,HELICAL,COMP................	1
33	PADZZ	19207	12335182	PLUG,MACHINE THREAD................	1
34	PADZZ	96906	MS28778-2	PACKING,PREFORMED PART OF KIT P/N	1

(1) ITEM NO	(2) SMR CODE	(3) CAGEC	(4) PART NUMBER	(5) DESCRIPTION AND USABLE ON CODES(UOC)	(6) QTY
				5705559..............................	
35	PFFZZ	19207	12335054-1	PLUG,MACHINE THREAD..................	4
36	PADZZ	96906	MS28778-6	PACKING,PREFORMED PART OF KIT P/N 5705559..............................	1
37	PAFZZ	19207	12335054-4	PLUG,MACHINE THREAD..................	1
38	PADZZ	96906	MS28778-3	PACKING,PREFORMED PART OF KIT P/N 5705559..............................	1
39	PAFZZ	19207	12335054-3	PLUG,MACHINE THREAD..................	1
40	PAFZZ	19207	12335179	PLUG,MACHINE THREAD..................	1

END OF FIGURE

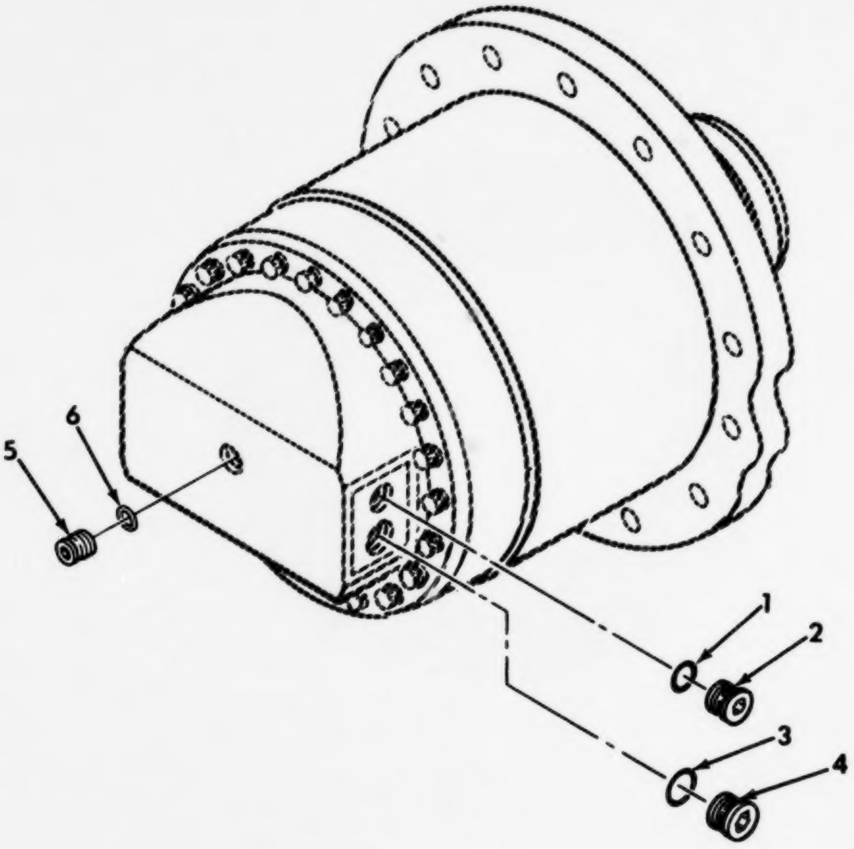

Figure 171. Intermediate Suspension Units 2R and 3L Shipping Plugs.

(1) ITEM NO	(2) SMR CODE	(3) CAGEC	(4) PART NUMBER	(5) DESCRIPTION AND USABLE ON CODES(UOC)	(6) QTY
				GROUP A3: SUSPENSION INSTALLATION FIG. 171 INTERMEDIATE SUSPENSION UNITS 2R AND 3L SHIPPING PLUGS	
1	PAFZZ	96906	MS28778-8	PACKING, PREFORMED PART OF KIT P/N 5705560	2
2	PFFZZ	19207	12335054-5	PLUG, MACHINE THREAD	2
3	PAFZZ	96906	MS28778-12	PACKING, PREFORMED PART OF KIT P/N 5705560	2
4	PFFZZ	19207	12335054-6	PLUG, MACHINE THREAD	2
5	PAFZZ	19207	12335054-4	PLUG, MACHINE THREAD	1
6	PAFZZ	96906	MS28778-6	PACKING, PREFORMED	1

END OF FIGURE

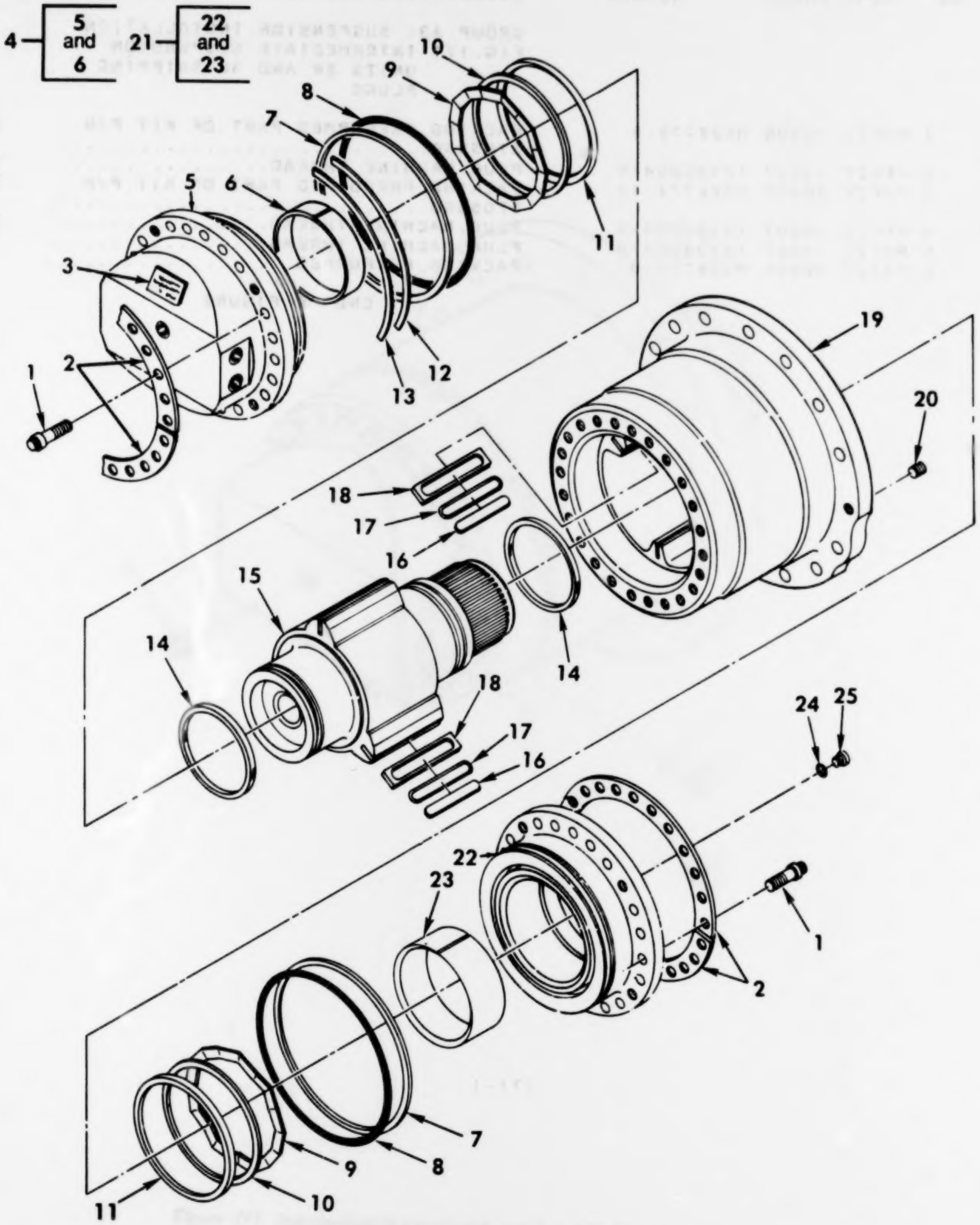

Figure 172. Intermediate Actuator Assembly.

(1) ITEM NO	(2) SMR CODE	(3) CAGEC	(4) PART NUMBER	(5) DESCRIPTION AND USABLE ON CODES(UOC)	(6) QTY
				GROUP A3: SUSPENSION INSTALLATION FIG. 172 INTERMEDIATE ACTUATOR ASSEMBLY	
1	PAFZZ	81349	M24240/3-20812	BOLT,MACHINE........................	48
2	PFDZZ	19207	12335143	SPACER,PLATE........................	4
3	PFDZZ	19207	12335142	PLATE,IDENTIFICATIO.................	1
4	PFDDD	19207	12335190	MANIFOLD ASSEMBLY...................	1
5	XADZZ	19207	12335190-1	.MANIFOLD...........................	1
6	PADZZ	26124	SX2151-076	.BUSHING,SLEEVE.....................	1
7	KDDZZ	19207	12335161	RING,BACKUP PART OF KIT P/N 5705560.	2
8	KDDZZ	02697	2-266N552-90	PACKING,PREFORMED PART OF KIT P/N 5705560............................	2
9	KDDZZ	19207	12335159	SPRING,WAVE PART OF KIT P/N 5705560.	2
10	KDDZZ	19207	12335158	RING,HUB SEAL PART OF KIT P/N 5705560............................	2
11	KDDZZ	19207	12335157	SEAL,HUB PART OF KIT P/N 5705560....	2
12	PADZZ	19207	12335162-1	SHIM .004 PART OF KIT P/N 5705560..	V
13	PADZZ	19207	12335162-2	SHIM .010 PART OF KIT P/N 5705560..	V
14	KDDZZ	75370	B2732	RING,PISTON PART OF KIT P/N 5705560.	2
15	PFDZZ	19207	12335153	WINGSHAFT...........................	1
16	PADZZ	19207	12335163	SPACER,PLATE........................	6
17	PADZZ	96906	MS28775-149	PACKING,PREFORMED PART OF KIT P/N 5705560............................	6
18	KDDZZ	19207	12335164	SEAL,VANE PART OF KIT P/N 5705560...	6
19	PFDZZ	19207	12335144	HOUSING,MECHANICAL..................	1
20	PADZZ	96906	MS51965-92	SETSCREW............................	2
21	PFDDD	19207	12335154	SUPPORT,WINGSHAFT...................	1
22	XADZZ	19207	12335154-1	.SUPPORT............................	1
23	PADZZ	26124	SX2151-076	.BUSHING,SLEEVE.....................	1
24	PADZZ	96906	MS28775-113	PACKING,PREFORMED PART OF KIT P/N 5705560............................	1
25	PFDZZ	19207	12335191	PLUG,PROTECTIVE,DUS WINGSHAFT......	1

END OF FIGURE

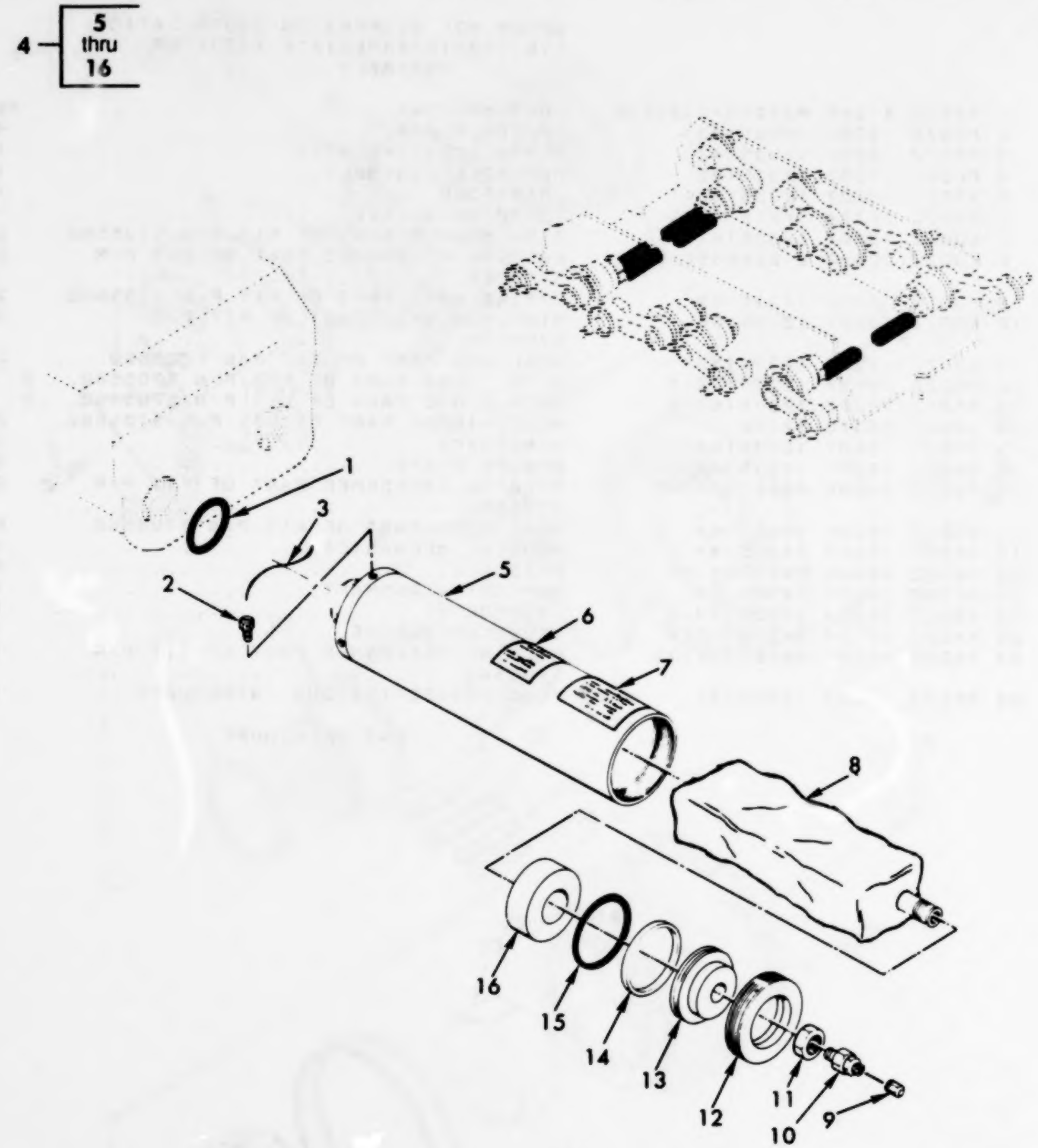

Figure 173. Accumulator Assembly and Mounting Parts.

(1) ITEM NO	(2) SMR CODE	(3) CAGEC	(4) PART NUMBER	(5) DESCRIPTION AND USABLE ON CODES(UOC)	(6) QTY
				GROUP A3: SUSPENSION INSTALLATION FIG. 173 ACCUMULATOR ASSEMBLY AND MOUNTING PARTS	
1	PAFZZ	96906	MS28778-14	PACKING, PREFORMED..................	6
2	PAFZZ	97403	13214E2562	SCREW, CAP, SOCKET HE................	6
3	MFFZZ	96906	MS20995F91AR	WIRE, NONELECTRICAL MAKE FROM NONELECTRICAL WIRE, P/N QQW461.......	V
4	PAFFF	26337	800107	ACCUMULATOR, HYDRAUL................	6
5	XAFZZ	26337	400323	.CYLINDER ASSY......................	1
6	PAFZZ	26337	552384	.DECAL..............................	1
7	PFFZZ	26337	300716	.PLATE, IDENTIFICATIO...............	1
8	KFFZZ	26337	600284	.BLADDER ASSY PART OF KIT P/N 5705405..............................	1
9	PAOZZ	96906	MS20813-1	.CAP, VALVE.........................	1
10	PAOZZ	96906	MS28889-2	.VALVE, PNEUMATIC TAN PART OF KIT P/N 5705405..........................	1
11	PAFZZ	88044	AN924-10	.NUT, PLAIN, HEXAGON................	1
12	PAFZZ	26337	400328	.RING, EXTERNALLY THR...............	1
13	PFFZZ	26337	400324	.PLATE, RETAINING, SHA..............	1
14	KFFZZ	26337	302511	.RING, RETAINING PART OF KIT P/N 5705405............................	1
15	KFFZZ	26337	305112	.PACKING, PREFORMED PART OF KIT P/N 5705405............................	1
16	KFFZZ	26337	400325	.GROMMET PART OF KIT P/N 5705405....	1

END OF FIGURE

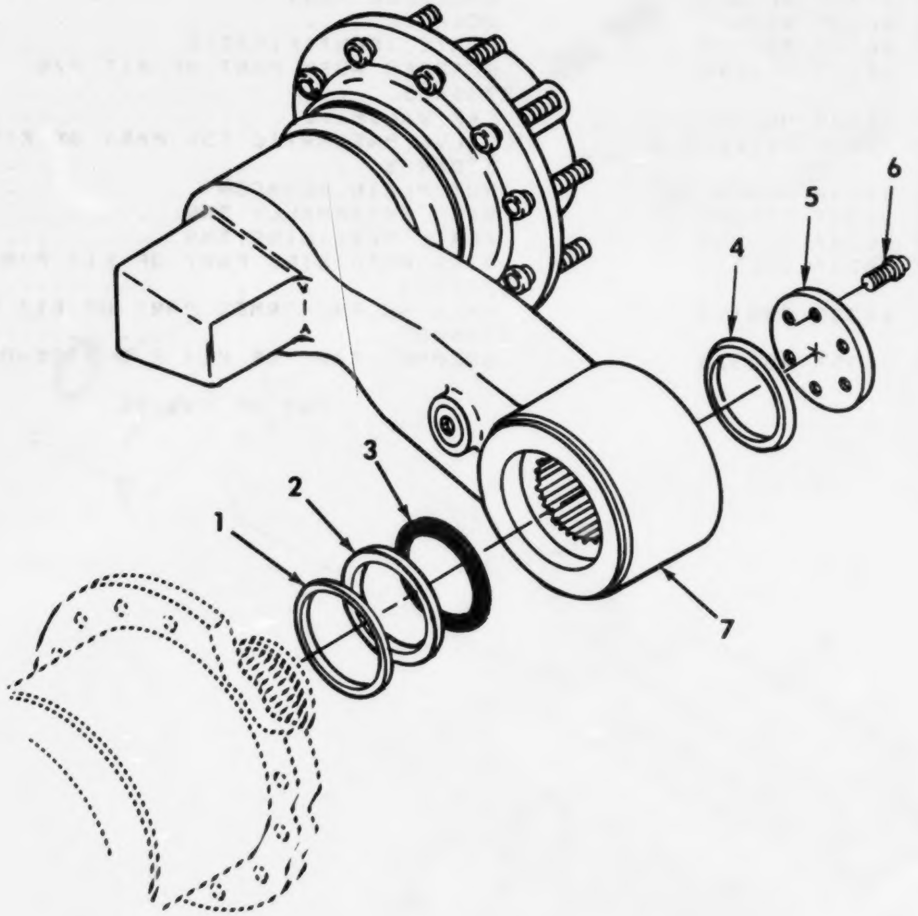

Figure 174. Roadwheel Arm Installation.

(1) ITEM NO	(2) SMR CODE	(3) CAGEC	(4) PART NUMBER	(5) DESCRIPTION AND USABLE ON CODES(UOC)	(6) QTY
				GROUP A3: SUSPENSION INSTALLATION FIG.174 ROADWHEEL ARM INSTALLATION	
1	KFOZZ	25119	25004750	SEAL PART OF KIT P/N 5705558........	8
2	KFOZZ	19207	12335160	RING,BACKUP PART OF KIT P/N 5705558.	8
3	KFOZZ	96906	MS28775-427	PACKING,PREFORMED PART OF KIT P/N 5705558............................	8
4	PAOZZ	19207	12334788	RING,TAPERED........................	8
5	PFOZZ	19207	12335056	RING,SIDE,AUTOMOTIV.................	8
6	PAOZZ	96906	MS21098-76	BOLT,SELF-LOCKING PART OF KIT P/N 5705558............................	48
7	PBOOO	97403	13211E9217	ARM ASSEMBLY,PIVOT,..................	8

END OF FIGURE

13 — 14 and 15

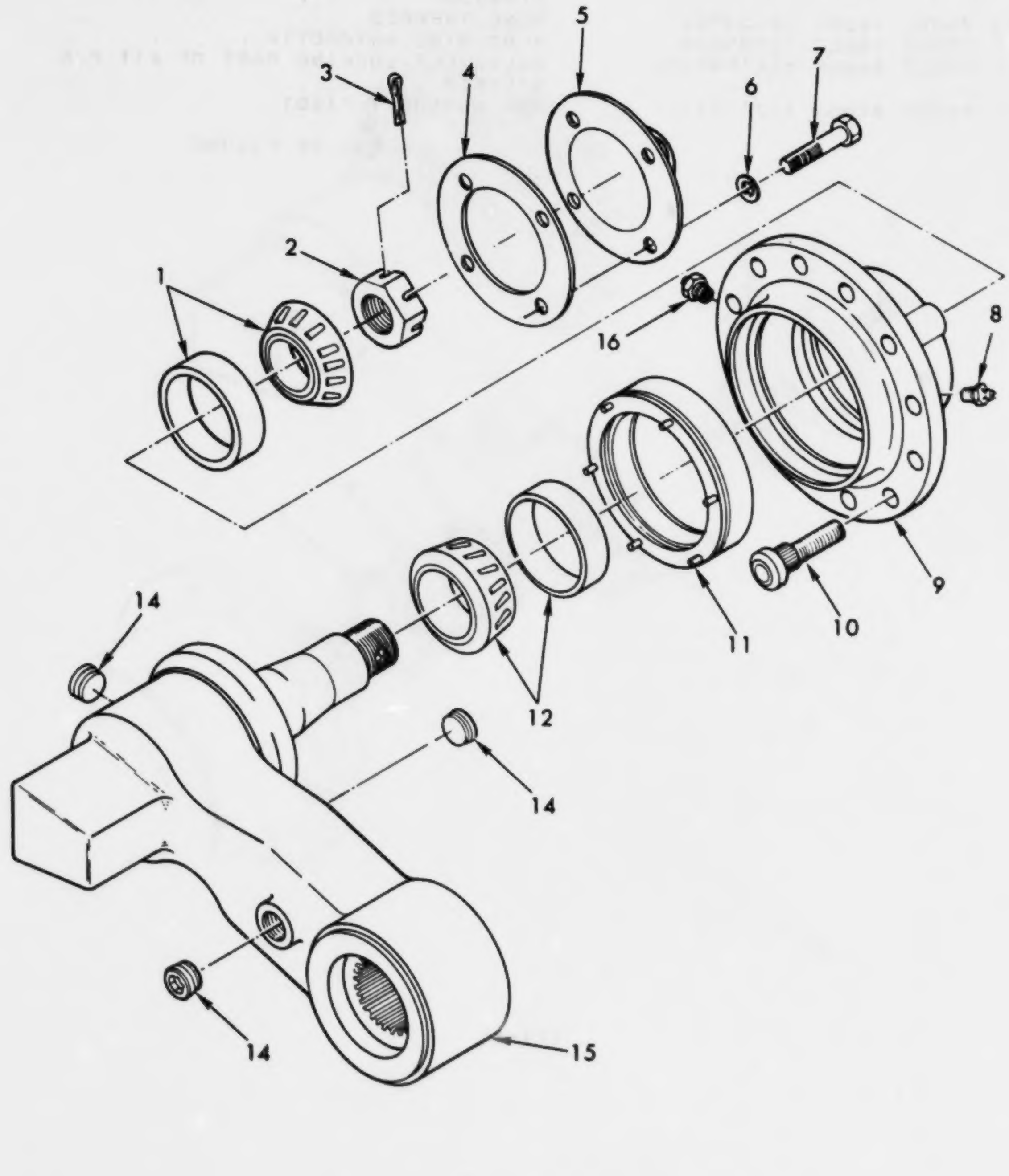

Figure 175. Roadwheel Arm Assembly.

(1) ITEM NO	(2) SMR CODE	(3) CAGEC	(4) PART NUMBER	(5) DESCRIPTION AND USABLE ON CODES(UOC)	(6) QTY
				GROUP A3: SUSPENSION INSTALLATION FIG.175 ROADWHEEL ARM ASSEMBLY	
1	PAOZZ	96906	MS19081-86	.BEARING,ROLLER,TAPE................	1
2	PAOZZ	97403	13211E9224	.NUT,PLAIN,SLOTTED,H................	1
3	PAOZZ	96906	MS24665-501	.PIN,COTTER.........................	1
4	PAOZZ	97403	13211E9231	.GASKET.............................	1
5	PAOZZ	97403	13214E2114	.HUB CAP,WHEEL......................	1
6	PAOZZ	96906	MS27183-14	.WASHER,FLAT........................	4
7	PAOZZ	96906	MS90728-61L	.BOLT,SELF-LOCKING..................	4
8	PAOZZ	96906	MS15003-1	.FITTING,LUBRICATION................	1
9	PAOZZ	97403	13211E9222	.HUB,BODY...........................	1
10	PAOZZ	97403	13211E9223	.BOLT,RIBBED SHOULDE................	10
11	PAOZZ	51829	B32-80-7607	.SEAL,PLAIN,ENCASED.................	1
12	PAOZZ	96906	MS19081-105	.BEARING,ROLLER,TAPE................	1
13	PAOZZ	97403	13211E9220	.ARM ASSEMBLY,PIVOT,................	1
14	PAOZZ	81348	WW-P-471ACABCF	..PLUG,PIPE.........................	3
15	XAOZZ	19207	12325801	..ARM...............................	1
16	PAOZZ	96906	MS35670-3A	.VALVE,SAFETY RELIEF................	1

END OF FIGURE

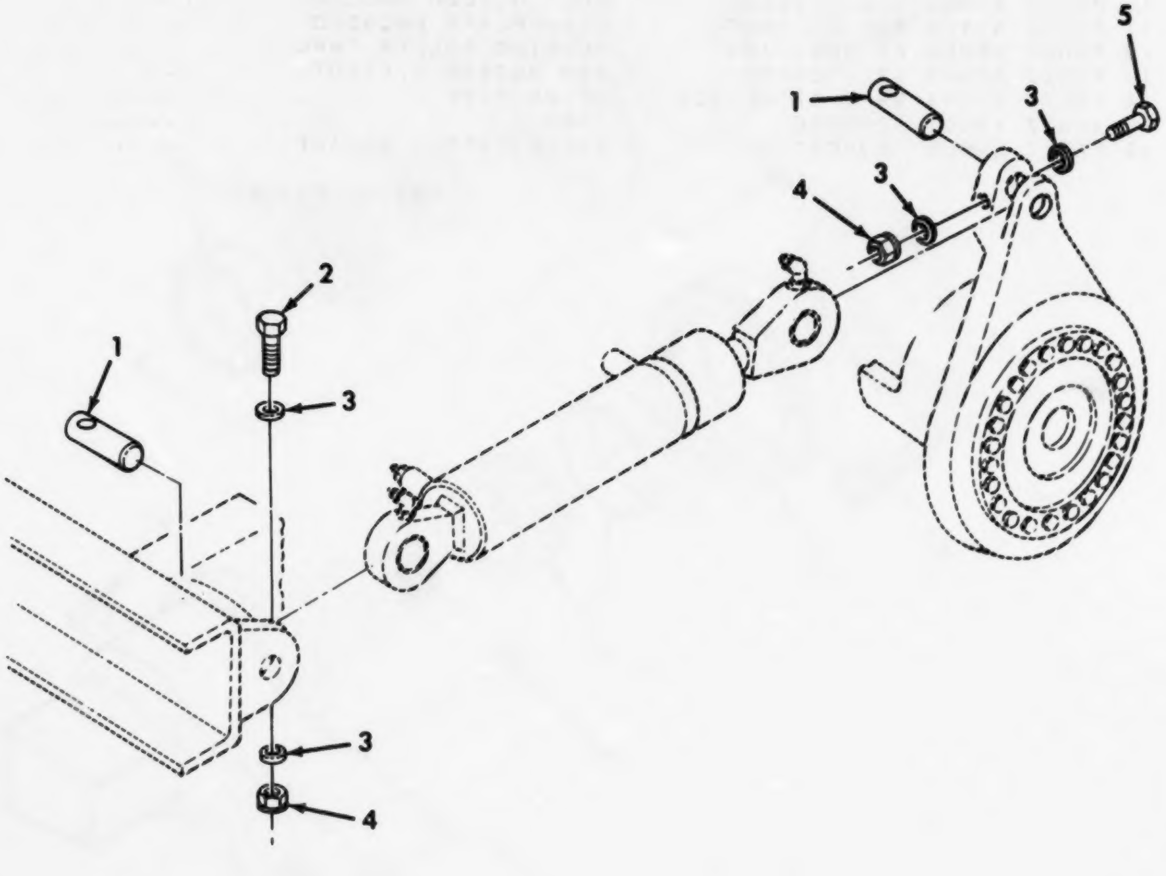

Figure 176. Track Adjusting Cylinder Mounting Hardware.

(1) ITEM NO	(2) SMR CODE	(3) CAGEC	(4) PART NUMBER	(5) DESCRIPTION AND USABLE ON CODES(UOC)	(6) QTY
				GROUP A3: SUSPENSION INSTALLATION FIG.176 TRACK ADJUSTING CYLINDER MOUNTING HARDWARE	
1	PAOZZ	97403	13211E8634	PIN,STRAIGHT,HEADLE..................	4
2	PAOZZ	96906	MS90725-75	SCREW,CAP,HEXAGON H..................	2
3	PAOZZ	96906	MS27183-14	WASHER,FLAT..........................	8
4	PAOZZ	96906	MS17829-6C	NUT,SELF-LOCKING,HE..................	4
5	PAOZZ	96906	MS90728-78	SCREW,CAP,HEXAGON H..................	2

END OF FIGURE

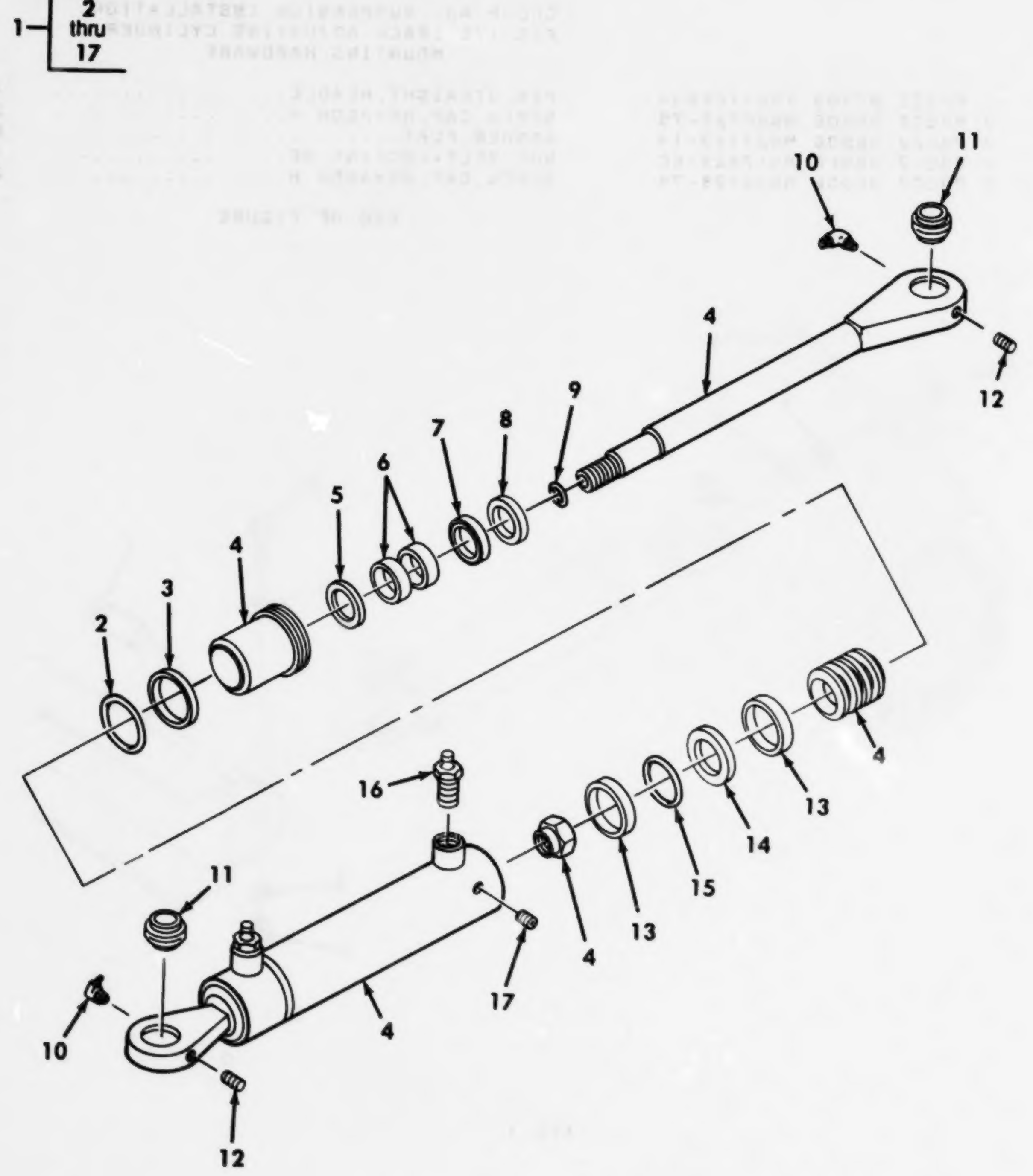

Figure 177. Track Adjusting Cylinder Assembly.

(1) ITEM NO	(2) SMR CODE	(3) CAGEC	(4) PART NUMBER	(5) DESCRIPTION AND USABLE ON CODES(UOC)	(6) QTY
				GROUP A3: SUSPENSION INSTALLATION FIG.177 TRACK ADJUSTING CYLINDER ASSEMBLY	
1	PAOFF	19207	12325842	CYLINDER,TRACK ADJ..................	2
2	KFFZZ	96906	MS28775-336	.PACKING,PREFORMED PART OF KIT P/N 57K1143..............................	1
3	KFFZZ	96906	MS28782-39	.RING,BACKUP PART OF KIT P/N 57K1143	1
4	XAFZZ	19207	NPN	.CYLINDER,TRACK ADJ.................	1
5	KFFZZ	19207	12335304-1	.RING,BUFFER PART OF KIT P/N 57K1143	1
6	KFFZZ	19207	12335305-2	.RING,WEAR PART OF KIT P/N 57K1143..	2
7	KFFZZ	19207	12335044-2	.SEAL PART OF KIT P/N 57K1143.......	1
8	KFFZZ	19207	12335303-2	.WIPER PART OF KIT P/N 57K1143......	1
9	KFFZZ	96906	MS28775-121	.PACKING,PREFORMED PART OF KIT P/N 57K1143..............................	1
10	PAOZZ	96906	MS15003-6	.FITTING,LUBRICATION................	2
11	PAOZZ	60380	15SF24	.BEARING,PLAIN,SELF-................	2
12	PAOZZ	81348	WW-P-471ACABCA	.PLUG,PIPE..........................	2
13	KFFZZ	19207	12335305-4	.RING,WEAR PART OF KIT P/N 57K1143..	2
14	KFFZZ	06085	12369135-2	.SEAL PART OF KIT P/N 57K1143.......	1
15	KFFZZ	06085	12369134-2	.PACKING,PREFORMED PART OF KIT P/N 57K1143..............................	1
16	PAOZZ	57733	330670	.VALVE,FILL.........................	2
17	PAFZZ	96906	MS51045-49	.SETSCREW...........................	1

END OF FIGURE

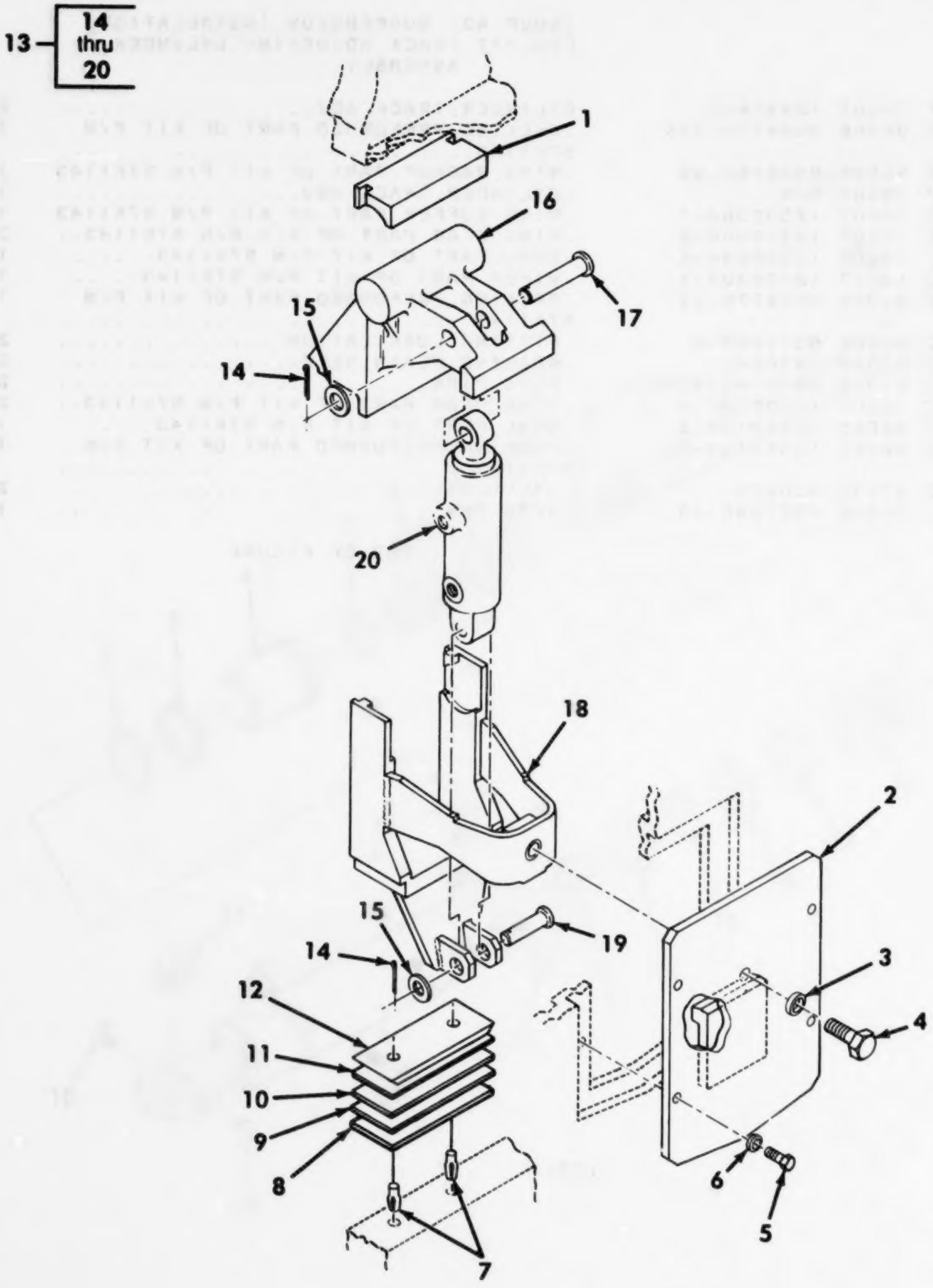

Figure 178. Front Bump Stop and Related Parts.

(1) ITEM NO	(2) SMR CODE	(3) CAGEC	(4) PART NUMBER	(5) DESCRIPTION AND USABLE ON CODES(UOC)	(6) QTY
				GROUP A3: SUSPENSION INSTALLATION FIG. 178 FRONT BUMP STOP AND RELATED PARTS	
1	PAOZZ	97403	13214E2768	ANVIL, SHOCK ABSORBE...................	2
2	PFOZZ	97403	13214E2771	COVER, ACCESS........................	2
3	PAOZZ	96906	MS27183-21	WASHER, FLAT.........................	2
4	PAOZZ	96906	MS90727-162	SCREW, CAP, HEXAGON H..................	2
5	PAOZZ	96906	MS90726-33	SCREW, CAP, HEXAGON H..................	8
6	PAOZZ	96906	MS27183-12	WASHER, FLAT.........................	8
7	PAOZZ	97403	13214E2793	PIN, GROOVED, HEADLES..................	4
8	PAOZZ	97403	13214E2769-1	SHIM .015...........................	V
9	PAOZZ	97403	13214E2769-2	SHIM .030...........................	V
10	PAOZZ	97403	13214E2769-3	SHIM .060...........................	V
11	PAOZZ	97403	13214E2769-4	SHIM .120...........................	V
12	PAOZZ	97403	13214E2770	SHIM................................	2
13	AOOOO	97403	13214E2772	BUMP STOP ASSY.......................	2
14	PAOZZ	96906	MS24665-353	.PIN, COTTER.........................	2
15	PAOZZ	96906	MS27183-21	.WASHER, FLAT........................	2
16	PFOZZ	97403	13214E2773	.BRACKET, EYE, NONROTA.................	1
17	PAOZZ	97403	13211E9255	.PIN, STRAIGHT, HEADED.................	1
18	PFOZZ	97403	13214E2775	.FRAME ASSY, SHOCK AB..................	1
19	PAOZZ	97403	13211E9256	.PIN, STRAIGHT, HEADED.................	1
20	PAOHH	19207	12325845	.SHOCK ABSORBER, DIRE..................	1

END OF FIGURE

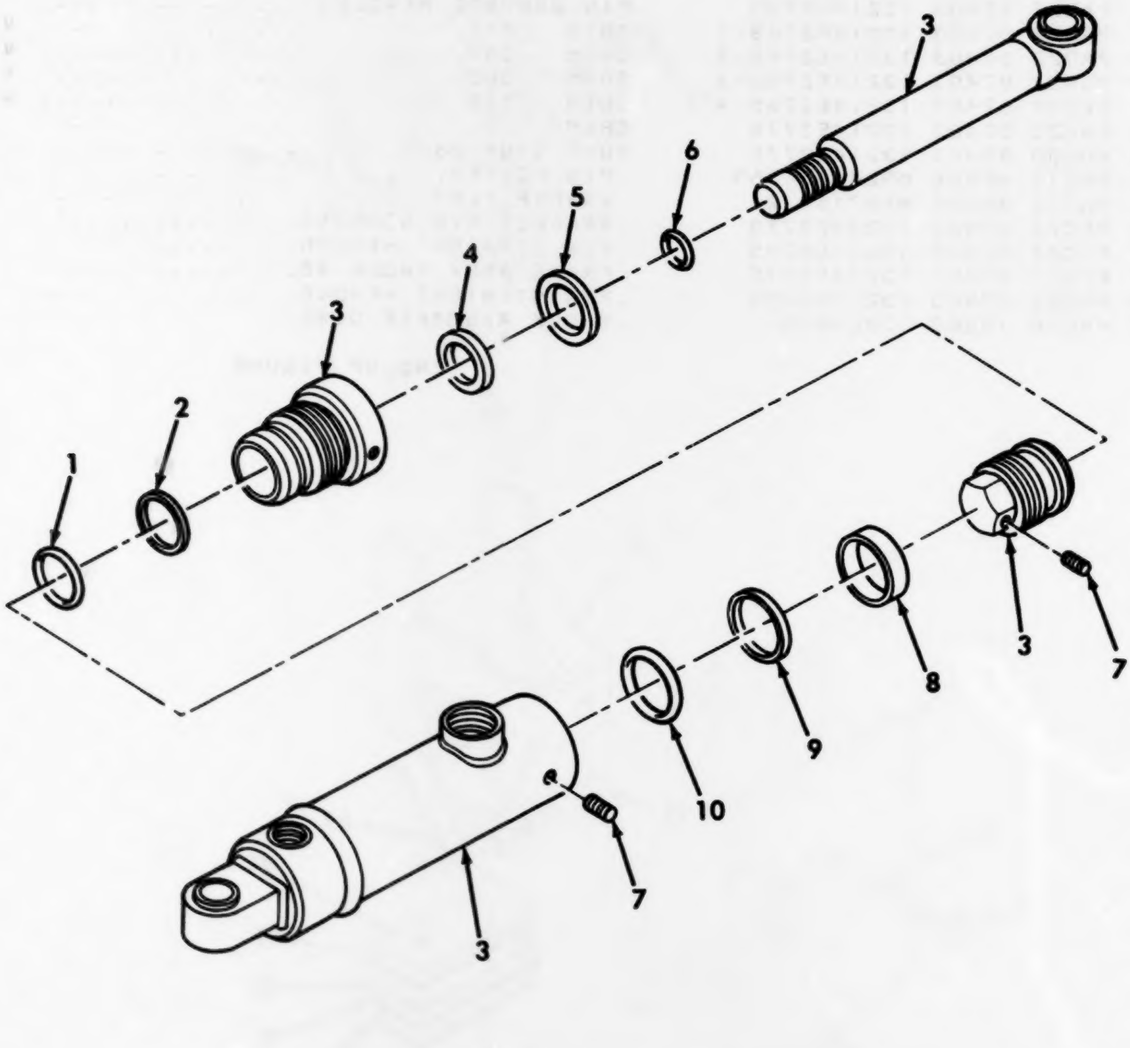

Figure 179. Bump Stop Cylinder Assembly.

(1) ITEM NO	(2) SMR CODE	(3) CAGEC	(4) PART NUMBER	(5) DESCRIPTION AND USABLE ON CODES(UOC)	(6) QTY
				GROUP A3: SUSPENSION INSTALLATION FIG.179 BUMP STOP CYLINDER ASSEMBLY	
1	KFFZZ	96906	MS28775-218	..PACKING,PREFORMED PART OF KIT P/N 57K1146..............................	1
2	KFFZZ	96906	MS28782-23	..RETAINER,PACKING PART OF KIT P/N 57K1146..............................	1
3	XAFZZ	19207	NPN-1	..CYLINDER,BUMP STOP................	1
4	KFFZZ	19207	12335044-1	..SEAL,ROD PART OF KIT P/N 57K1146..	1
5	KFFZZ	19207	1233530-1	..WIPER,ROD PART OF KIT P/N 57K1146.	1
6	KFFZZ	96906	MS28775-017	..PACKING,PREFORMED PART OF KIT P/N 57K1146..............................	1
7	PAFZZ	96906	MS51045-40	..SETSCREW..........................	2
8	KFFZZ	19207	12335305-1	..RING,WEAR PART OF KIT P/N 57K1146.	1
9	KFFZZ	06085	12369135-1	..SEAL,PISTON PART OF KIT P/N 57K1146..............................	1
10	KFFZZ	96906	MS28775-025	..PACKING,PREFORMED PART OF KIT P/N 57K1146..............................	1

END OF FIGURE

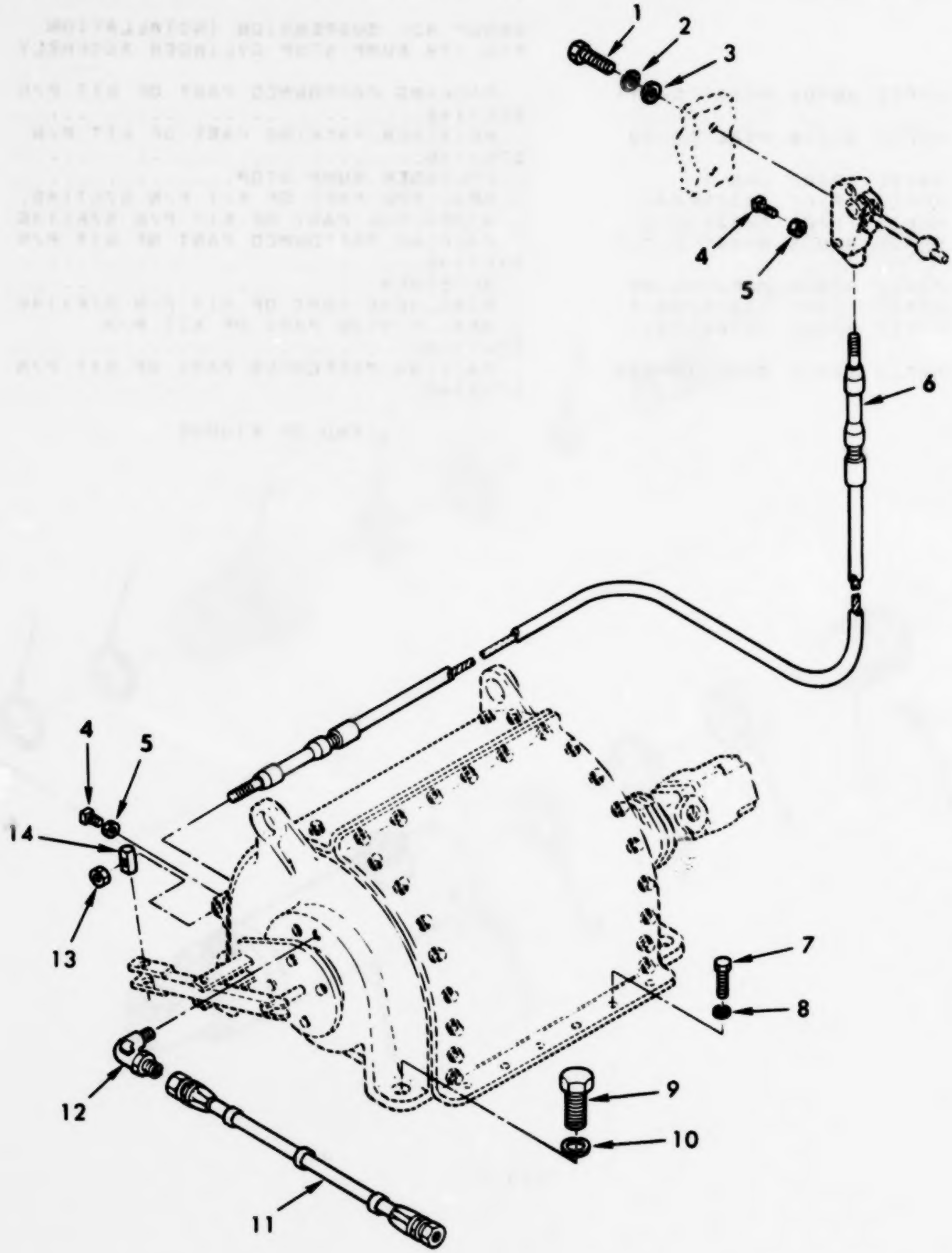

Figure 180. Winch Installation.

(1) ITEM NO	(2) SMR CODE	(3) CAGEC	(4) PART NUMBER	(5) DESCRIPTION AND USABLE ON CODES(UOC)	(6) QTY
				GROUP A5: WINCH INSTALLATION	
				FIG.180 WINCH INSTALLATION	
1	PAOZZ	96906	MS90727-114	SCREW,CAP,HEXAGON H..................	2
2	PAOZZ	96906	MS35338-48	WASHER,LOCK..........................	2
3	PAOZZ	96906	MS27183-18	WASHER,FLAT..........................	2
4	PAOZZ	96906	MS51955-38	SETSCREW.............................	2
5	PAOZZ	96906	MS51967-8	NUT,PLAIN,HEXAGON....................	2
6	PAOZZ	06970	580-404-048	CONTROL ASSEMBLY,PU..................	1
7	PAOZZ	96906	MS90728-60	SCREW,CAP,HEXAGON H..................	12
8	PAOZZ	96906	MS35338-46	WASHER,LOCK..........................	12
9	PAOZZ	96906	MS90728-234	SCREW,CAP,HEXAGON H..................	4
10	PAOZZ	96906	MS35338-53	WASHER,LOCK..........................	4
11	PAOZZ	19207	12357142	HOSE ASSEMBLY,NONME..................	1
12	PAOZZ	96906	MS51504A6-2	ELBOW,PIPE TO TUBE...................	1
13	PAOZZ	96906	MS35691-21	NUT,PLAIN,HEXAGON....................	1
14	PAOZZ	97403	13214E2919	TRUNNION,WINCH.......................	1

END OF FIGURE

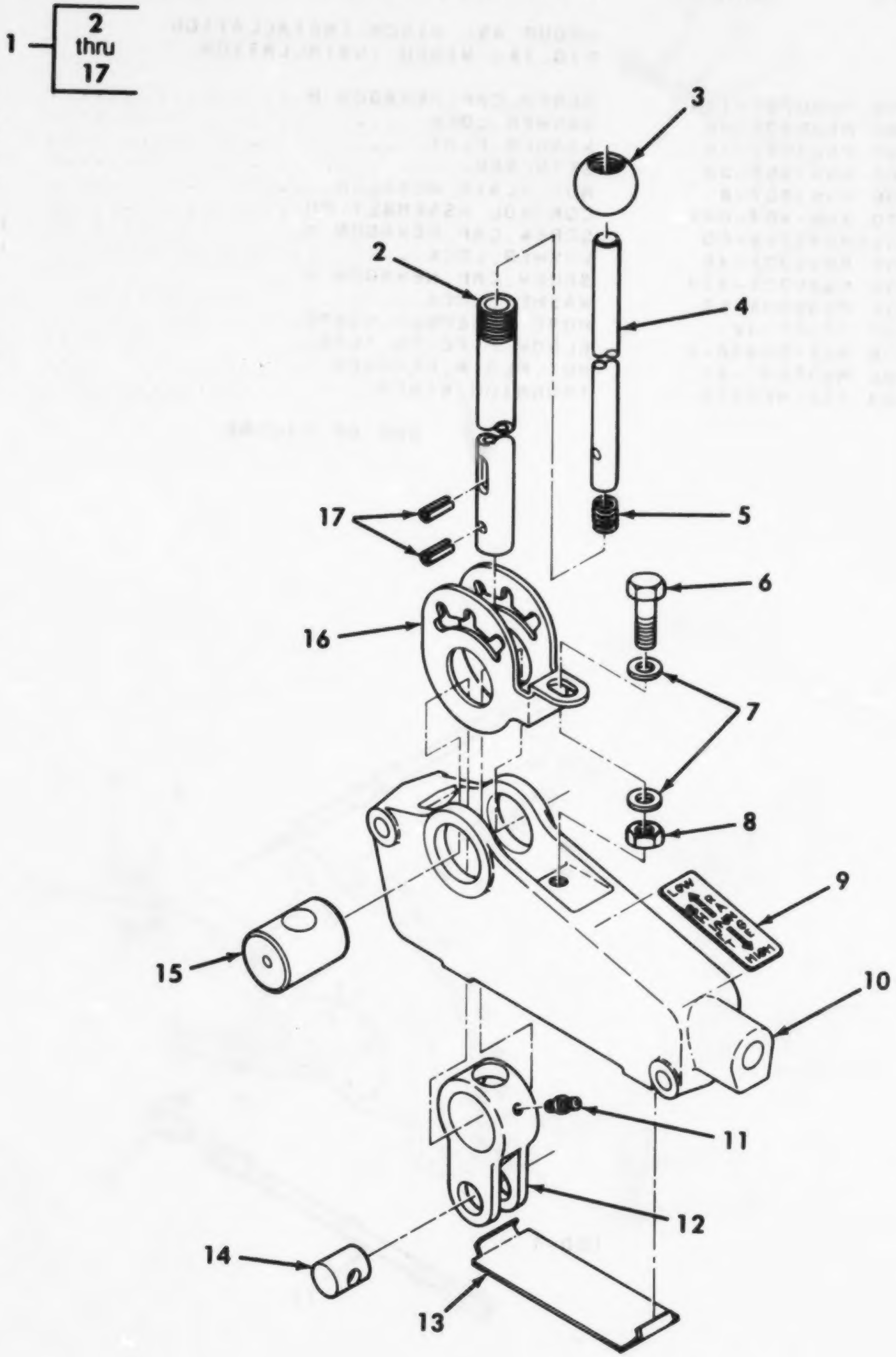

Figure 181. Winch Shift Control Assembly.

(1) ITEM NO	(2) SMR CODE	(3) CAGEC	(4) PART NUMBER	(5) DESCRIPTION AND USABLE ON CODES(UOC)	(6) QTY
				GROUP A5: WINCH INSTALLATION FIG.181 WINCH SHIFT CONTROL ASSEMBLY	
1	PAOFF	97403	13214E2920	SHIFT CONTROL ASSY	1
2	PAFZZ	97403	13214E2924	.LEVER,MANUAL CONTRO	1
3	PAOZZ	45320	41404	.KNOB	1
4	PFFZZ	97403	13214E2931	.LEVER,MANUAL CONTRO	1
5	PAFZZ	97403	13214E2932	.SPRING,HELICAL,COMP	1
6	PAFZZ	96906	MS90727-62	.SCREW,CAP,HEXAGON H	1
7	PAFZZ	96906	MS27183-14	.WASHER,FLAT	2
8	PAFZZ	96906	MS35691-21	.NUT,PLAIN,HEXAGON	1
9	PFOZZ	97403	13214E2929	.PLATE,INSTRUCTION	1
10	PFFZZ	97403	13214E2927	.HOUSING,SHIFT CONTR	1
11	PAOZZ	96906	MS15001-1	.FITTING,LUBRICATION	1
12	PAFZZ	97403	13214E2923	.LEVER,REMOTE CONTRO	1
13	PFOZZ	97403	13214E2926	.COVER,ACCESS	1
14	PAFZZ	97403	13214E2922	.PIN,STRAIGHT,HEADLE	1
15	PAFZZ	97403	13214E2925	.PIN,HOLLOW	1
16	PAFZZ	97403	13214E2928	.CLIP,HANDLE LOCKING	1
17	PAFZZ	96906	MS16562-67	.PIN,SPRING	2

END OF FIGURE

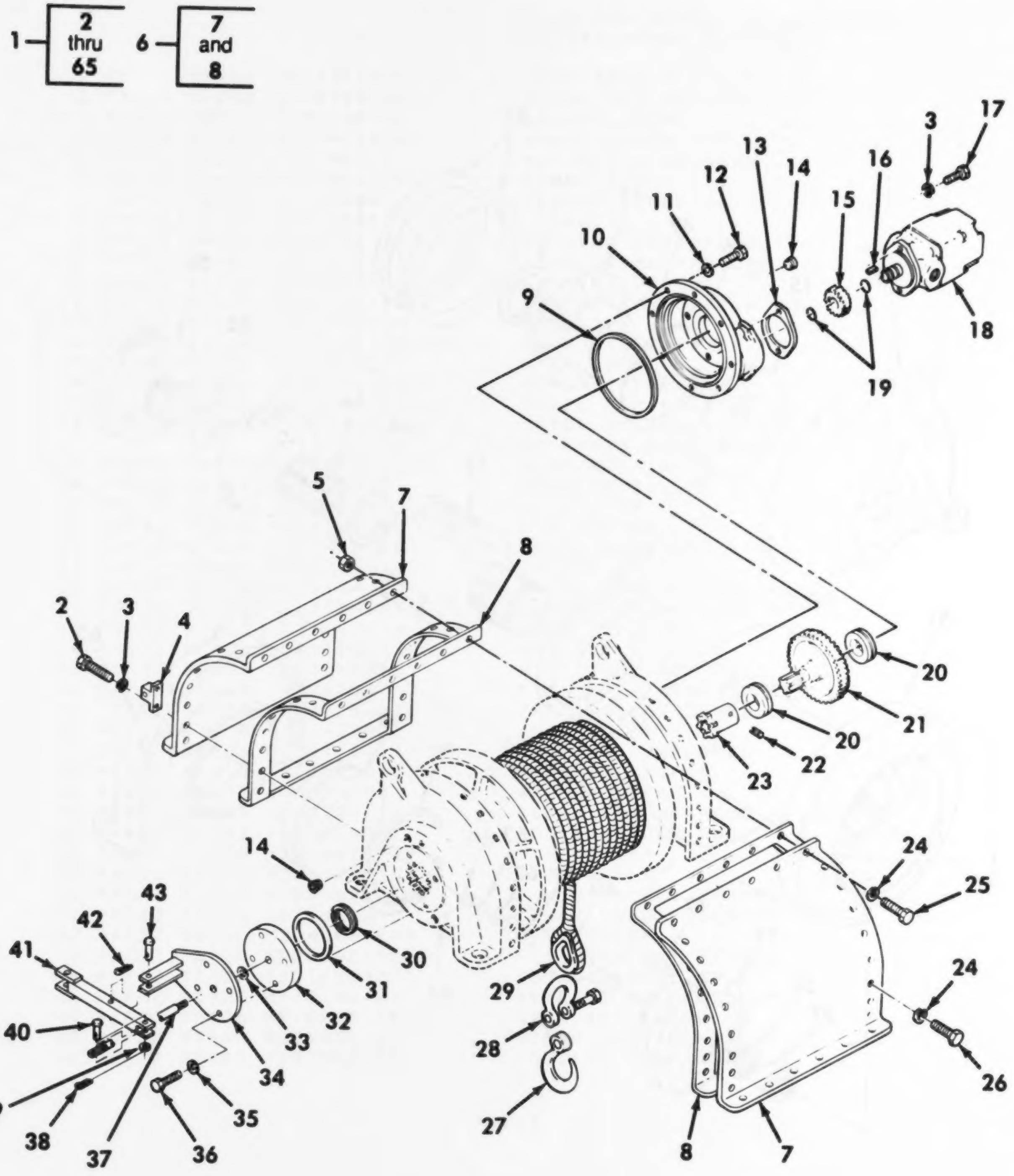

Figure 182. Winch Assembly (Sheet 1 of 2).

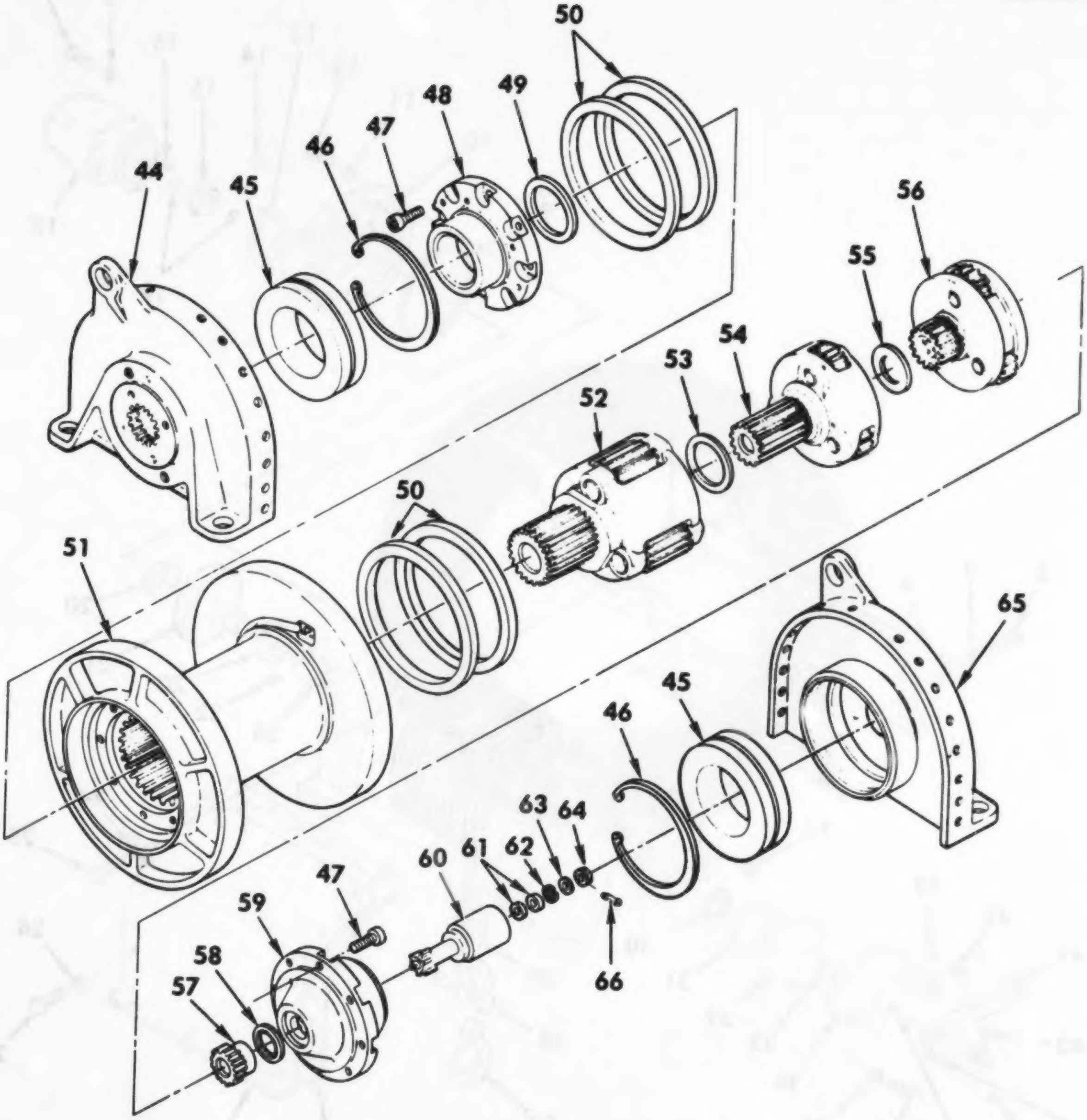

Figure 182. Winch Assembly (Sheet 2 of 2).

(1) ITEM NO	(2) SMR CODE	(3) CAGEC	(4) PART NUMBER	(5) DESCRIPTION AND USABLE ON CODES(UOC)	(6) QTY
				GROUP A5: WINCH INSTALLATION FIG.182 WINCH ASSEMBLY	
1	PFOFF	97403	13214E2910	WINCH,DRUM,VEHICLE...................	1
2	PAOZZ	96906	MS18154-60	.SCREW,CAP,HEXAGON H.............	2
3	PAOZZ	96906	MS35338-46	.WASHER,LOCK.....................	4
4	PAOZZ	97403	13214E2918	.MOUNT,COVER ASSY................	1
5	PAFZZ	96906	MS51967-8	.NUT,PLAIN,HEXAGON...............	6
6	PAFZZ	97403	13215E2332	.COVER,WINCH.....................	2
7	XAFZZ	19207	12334996	..COVER,WINCH....................	1
8	PAFZZ	19207	12334997	..GASKET.........................	1
9	PAFZZ	96906	MS28775-264	.PACKING,PREFORMED...............	1
10	PFFZZ	97403	13215E2335	.HOUSING,MECHANICAL..............	1
11	PAFZZ	96906	MS35338-45	.WASHER,LOCK.....................	8
12	PAFZZ	96906	MS90728-37	.SCREW,CAP,HEXAGON H.............	8
13	PAOZZ	97403	13215E2334	.GASKET..........................	1
14	PAOZZ	81348	WW-P-471ACABUD	.PLUG,PIPE.......................	4
15	PAOZZ	97403	13215E2341	.GEAR,SPUR.......................	1
16	PAOZZ	96906	MS20066-227	.KEY,MACHINE.....................	1
17	PAOZZ	96906	MS90728-62	.SCREW,CAP,HEXAGON H.............	2
18	PBOHH	64294	MC3F1A19D15B	.MOTOR,HYDRAULIC SEE FIGURE 183 FOR PARTS BREAKDOWN.............	1
19	PAOZZ	96906	MS16624-1100	.RING,RETAINING..................	2
20	PAFZZ	08162	MU1207DAL	.BEARING,ROLLER,CYLI.............	2
21	PFFZZ	97403	13215E2343	.GEAR,SPUR.......................	1
22	PAFZZ	96906	MS16562-30	.PIN,SPRING......................	1
23	PAFZZ	97403	13214E2908	.COUPLING,SHAFT,RIGI.............	1
24	PAFZZ	96906	MS35338-46	.WASHER,LOCK.....................	36
25	PAFZZ	96906	MS18154-60	.SCREW,CAP,HEXAGON H.............	6
26	PAFZZ	96906	MS18154-58	.SCREW,CAP,HEXAGON H.............	30
27	PAOZZ	97403	13211E9573	.HOOK,TOW........................	1
28	PAOZZ	97403	13211E9571	.SHACKLE.........................	1
29	PAOZZ	97403	13215E2359	.WIRE ROPE ASSEMBLY,.............	1
30	PAFZZ	19207	10915155	.RING,RETAINING..................	1
31	PAFZZ	96906	MS28775-242	.PACKING,PREFORMED...............	1
32	PFFZZ	97403	13214E2909	.COVER,ACCESS....................	1
33	PAFZZ	96906	MS28775-112	.PACKING,PREFORMED...............	1
34	PFFZZ	97403	13214E2916	.BRACKET,SHIFT...................	1
35	PAFZZ	02614	N405P41B6	.WASHER,LOCK.....................	4
36	PAFZZ	96906	MS90725-14	.SCREW,CAP,HEXAGON H.............	4
37	PAFZZ	97403	13214E2907	.ROD,THREADED END................	1
38	PAOZZ	96906	MS24665-132	.PIN,COTTER......................	1
39	PAOZZ	96906	MS27183-10	.WASHER,FLAT.....................	1
40	PAOZZ	96906	MS20392-3C27	.PIN,STRAIGHT,HEADED.............	1
41	PFOZZ	97403	13214E2917	.LEVER,MANUAL CONTRO.............	1
42	PAOZZ	96906	MS24665-285	.PIN,COTTER......................	1
43	PAOZZ	96906	MS20392-5C55	.PIN,STRAIGHT,HEADED.............	1
44	PFFZZ	97403	13215E2337	.SUPPORT,END.....................	1
45	PAFZZ	96906	MS17133-24	.BEARING,ROLLER,SELF.............	2
46	PAFZZ	96906	MS16625-1800	.RING,RETAINING..................	2
47	PAFZZ	96906	MS16998-96	.SCREW,CAP,SOCKET HE.............	16
48	PFFZZ	97403	13215E2358	.HOUSING,MECHANICAL..............	1

(1) ITEM NO	(2) SMR CODE	(3) CAGEC	(4) PART NUMBER	(5) DESCRIPTION AND USABLE ON CODES(UOC)	(6) QTY
49	PAFZZ	19207	10908649	.SPACER,RING........................	1
50	PAFZZ	73680	21093-4509	.SEAL,PLAIN ENCASED.................	4
51	XAFZZ	97403	13215E2339	.WINCH,DRUM,VEHICLE.................	1
52	PFFFF	97403	13215E2355	.CARRIER ASSEMBLY 3 SEE FIGURE 184 FOR PARTS BREAKDOWN.................	1
53	PAFZZ	19207	10908648	.WASHER, THRUST.....................	1
54	PFFHH	19204	10908580	.CARRIER ASSEMBLY,BO SEE FIGURE 185 FOR PARTS BREAKDOWN.............	1
55	PAFZZ	19207	10908642	.WASHER,FLAT........................	1
56	PFFFF	97403	13214E2903	.CARRIER ASSEMBLY 1 SEE FIGURE 186 FOR PARTS BREAKDOWN.................	1
57	PAFZZ	97403	13214E2906	.GEAR,SPUR..........................	1
58	PAFZZ	19207	10908650	.WASHER,FLAT........................	1
59	PFFZZ	97403	13215E2346	.HOUSING,END........................	1
60	PAFZZ	97403	13214E2912	.SPOOL,SHIFT........................	1
61	PAFZZ	43334	R6	.BEARING,BALL,ANNULA................	2
62	PAFZZ	96906	MS16625-1087	.RING,RETAINING.....................	1
63	PAFZZ	19207	10904944	.BEARING,WASHER,THRU................	1
64	PAFZZ	96906	MS35692-21	.NUT,PLAIN,SLOTTED,H................	1
65	PFFZZ	97403	13215E2336	.SUPPORT,MOTOR END..................	1
66	PAFZZ	96906	MS24665-285	.PIN,COTTER.........................	1

END OF FIGURE

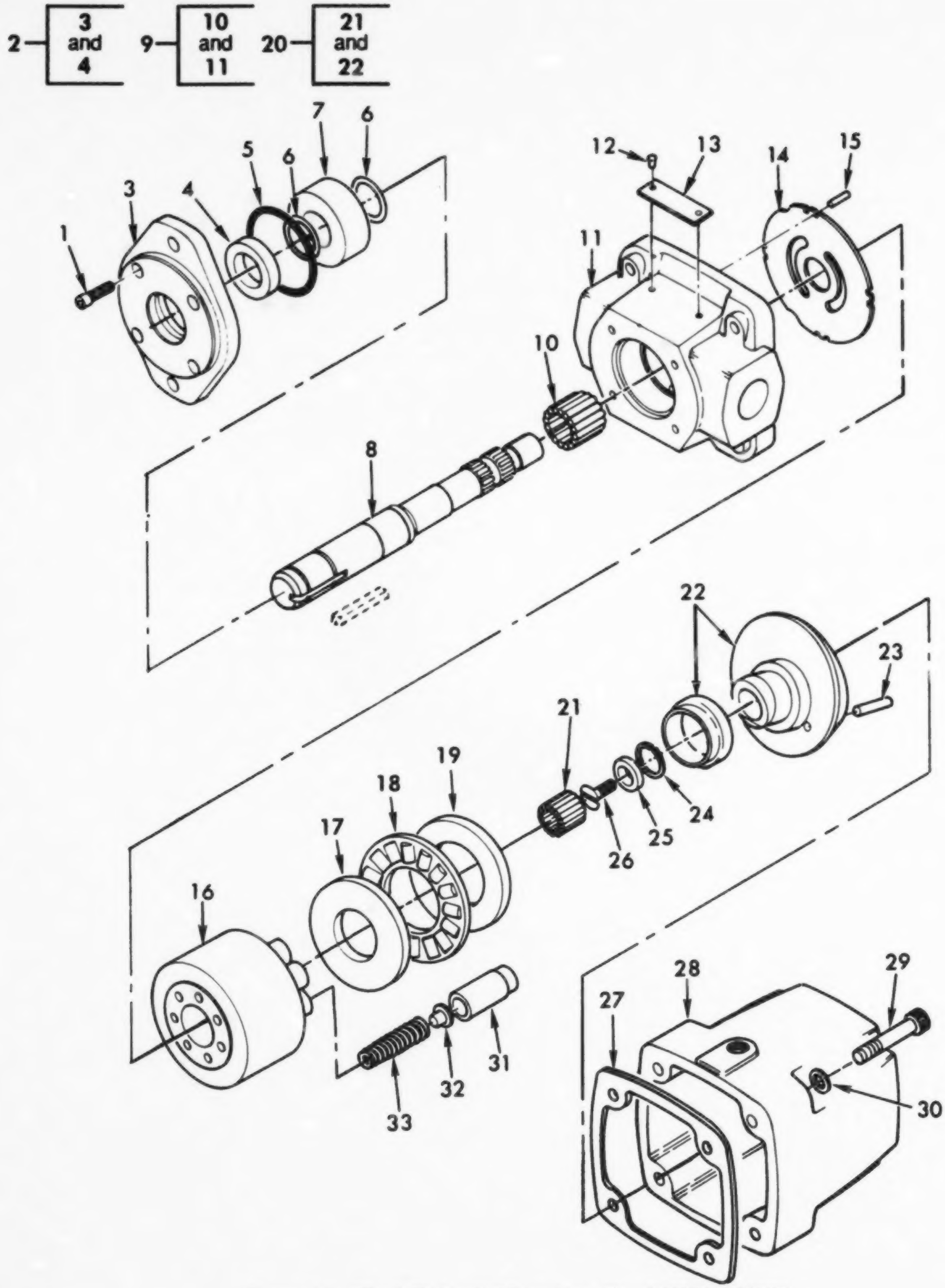

Figure 183. Winch Hydraulic Motor Assembly – MC3F1A19D15B

GROUP A5: WINCH INSTALLATION
FIG. 183 WINCH HYDRAULIC MOTOR ASSEMBLY- MC3F1A19D15B

(1) ITEM NO	(2) SMR CODE	(3) CAGEC	(4) PART NUMBER	(5) DESCRIPTION AND USABLE ON CODES(UOC)	(6) QTY
1	PAHZZ	64294	29531-57	SCREW,CAP,SOCKET HE PART OF KIT P/N 46095-6	4
2	PFHZZ	64294	33794	PLATE ASSY,MOUNTING	1
3	XAHZZ	64294	33795-1	.PLATE	1
4	PAHZZ	64294	27451	.SEAL,PLAIN ENCASED PART OF KIT P/N 46095-6	1
5	KFHZZ	64294	29771-034	PACKING,PREFORMED PART OF KIT P/N 46095-6	1
6	PAHZZ	64294	29656-10	RING,RETAINING	2
7	PAHZZ	64294	21496	BEARING,BALL,ANNULA	1
8	PAHZZ	64294	33780-11	SHAFT,SHOULDERED	1
9	PFHHH	64294	38248-12	BODY ASSEMBLY,HYDRA	1
10	PAHZZ	64294	27887	.BEARING,ROLLER,NEED	1
11	XAHZZ	64294	38249-3	.BODY	1
12	PFHZZ	64294	29549-4	SCREW,DRIVE	2
13	PFHZZ	64294	41693	PLATE,IDENTIFICATIO	1
14	KFHZZ	64294	48307-3	PLATE,WEAR PART OF KIT P/N 46095-6	1
15	PAHZZ	64294	17086-35	PIN,STRAIGHT,HEADLE	2
16	PFHZZ	64294	45179-4	CYLINDER,SLEEVE	1
17	PAHZZ	64294	33798	PLATE,PISTON	1
18	PAHZZ	64294	33263	BEARING,ROLLER,THRU	1
19	PFHZZ	64294	33799-1	PLATE,THRUST	1
20	PFHHH	64294	38933-11	RAMP ASSEMBLY	1
21	PAHZZ	64294	34903	.BEARING,ROLLER,NEED	1
22	XAHZZ	64294	38947-6	.RAMP	1
23	PFHZZ	64294	19212-8	PIN,STRAIGHT,HEADLE	1
24	PAHZZ	64294	29657-87	RING,RETAINING	1
25	PAHZZ	64294	36906	WASHER,RECESSED	1
26	PAHZZ	64294	151-36907	SCREW,MACHINE	1
27	KFHZZ	64294	49392	GASKET PART OF KIT P/N 46095-6	1
28	XAHZZ	64294	49391-1	COVER	1
29	PAHZZ	64294	29531-100	SCREW,CAP,SOCKET HE	4
30	KFHZZ	64294	29602-130	WASHER,FLAT PART OF KIT P/N 46095-6	4
31	PFHZZ	64294	33797-1	PISTON,VALVE	7
32	PFHZZ	64294	33801	SEAT,HELICAL COMPRE	7
33	PAHZZ	64294	33796	SPRING,HELICAL,COMP	7

END OF FIGURE

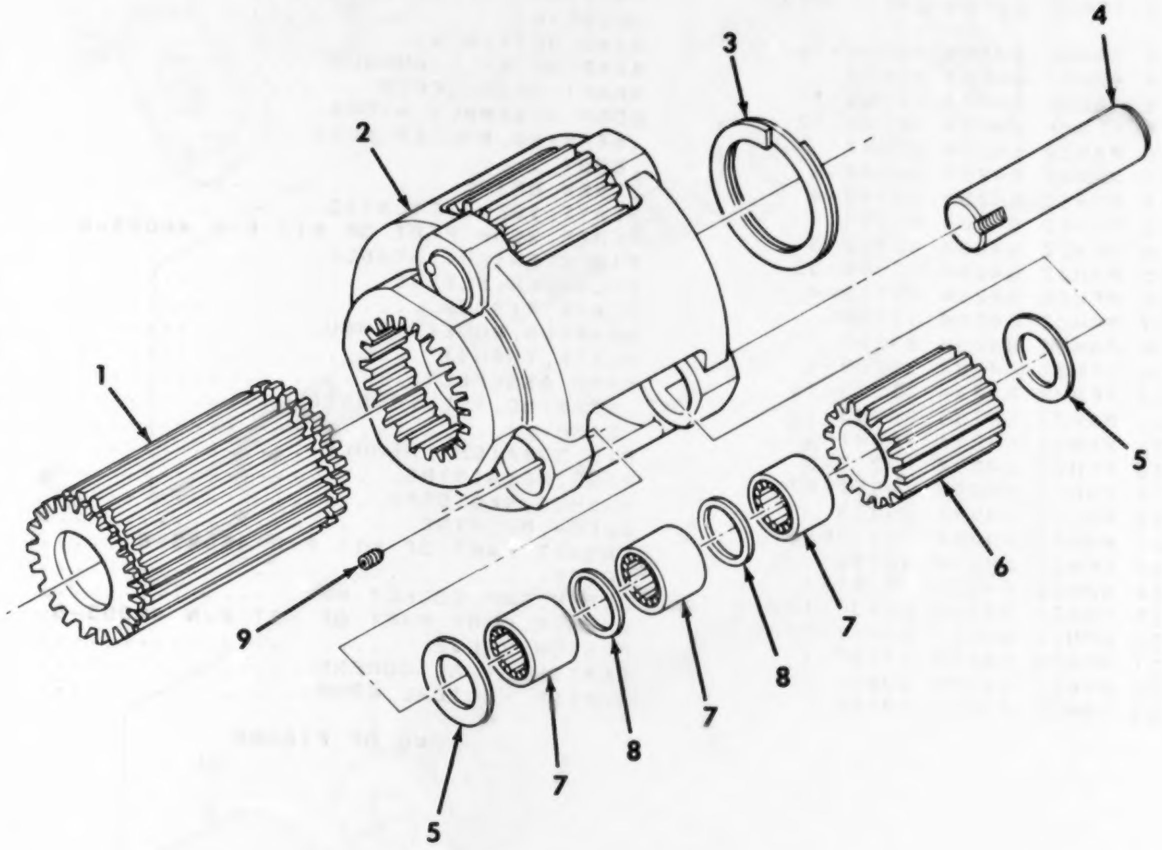

Figure 184. Stage Three Carrier Assembly – 13215E2355

(1) ITEM NO	(2) SMR CODE	(3) CAGEC	(4) PART NUMBER	(5) DESCRIPTION AND USABLE ON CODES(UOC)	(6) QTY
				GROUP A5: WINCH INSTALLATION FIG.184 STAGE THREE CARRIER ASSEMBLY 13215E2355	
1	PFFZZ	97403	13215E2357	SHAFT,STRAIGHT..........................	1
2	XAFZZ	19207	10908629	CARRIER,WINCH..........................	1
3	PAFZZ	19207	10915155	RING,RETAINING..........................	1
4	PAFZZ	19207	10908631	PIN, PLANET GEAR.......................	3
5	PAFZZ	19207	10908633	WASHER,FLAT............................	6
6	PAFZZ	19207	10908632	GEAR,SPUR..............................	3
7	PAFZZ	96906	MS19065-30	ROLLER,BEARING.........................	306
8	PAFZZ	19207	10908634	SPACER,RING............................	6
9	PAFZZ	96906	MS51964-66	SETSCREW...............................	3

END OF FIGURE

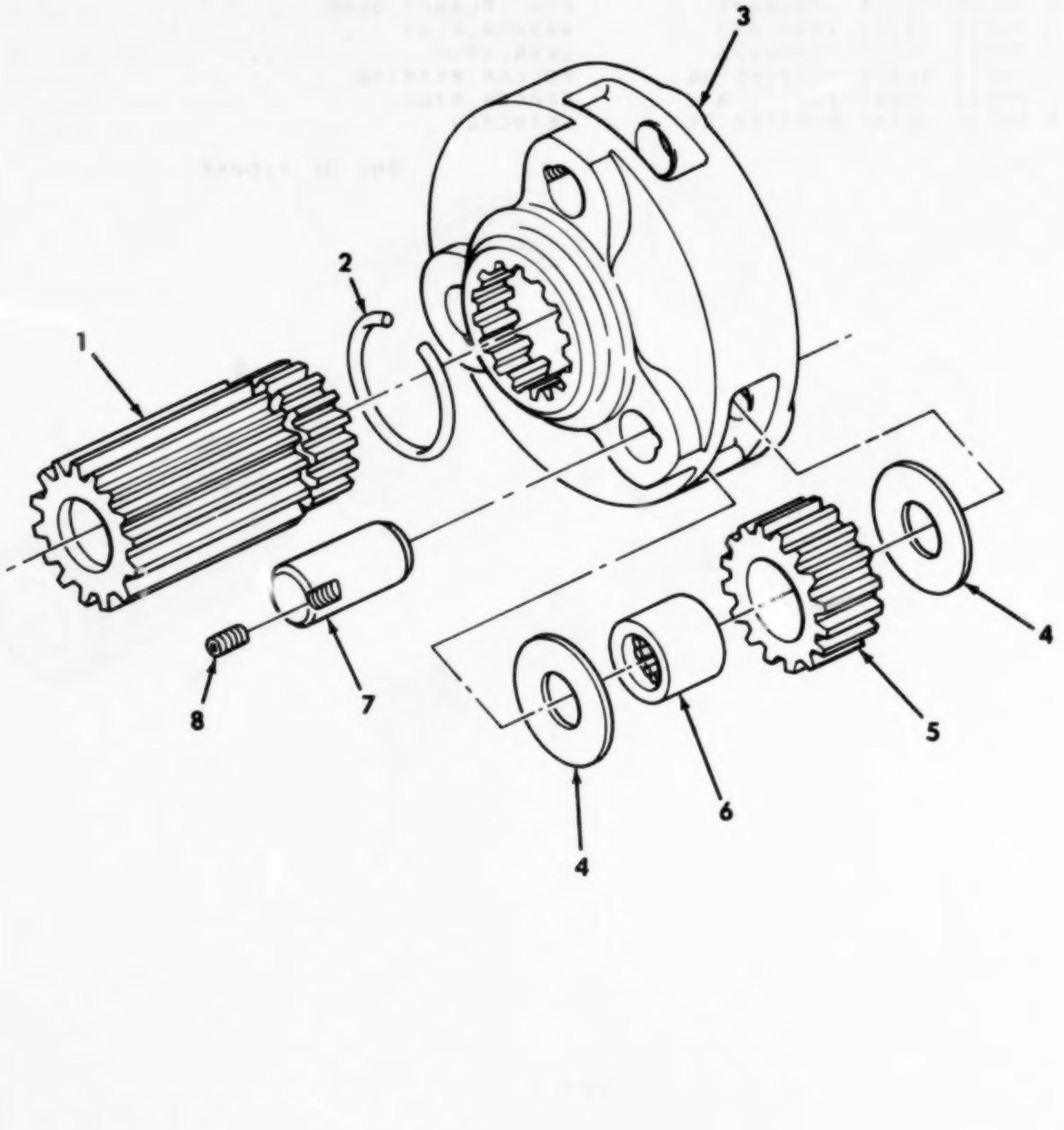

Figure 185. Stage Two Carrier Assembly – 10908580.

(1) ITEM NO	(2) SMR CODE	(3) CAGEC	(4) PART NUMBER	(5) DESCRIPTION AND USABLE ON CODES(UOC)	(6) QTY
				GROUP A5: WINCH INSTALLATION FIG.185 STAGE TWO CARRIER ASSEMBLY- 10908580	
1	PAFZZ	19207	10908578	GEAR,SPUR	1
2	PAFZZ	19207	10908535	RING,RETAINING	1
3	XAFZZ	19207	10908579	CARRIER	1
4	PAFZZ	19207	10908582	WASHER,FLAT	6
5	PAFZZ	19207	10908581	GEAR,SPUR	3
6	KFFZZ	96906	MS51961-6	BEARING,ROLLER,NEED PART OF KIT P/N 5702992	3
7	KFFZZ	19207	10908583	PIN,PLANET GEAR PART OF KIT P/N 5702992	3
8	PAFZZ	96906	MS51964-66	SETSCREW PART OF KIT P/N 5702992	3

END OF FIGURE

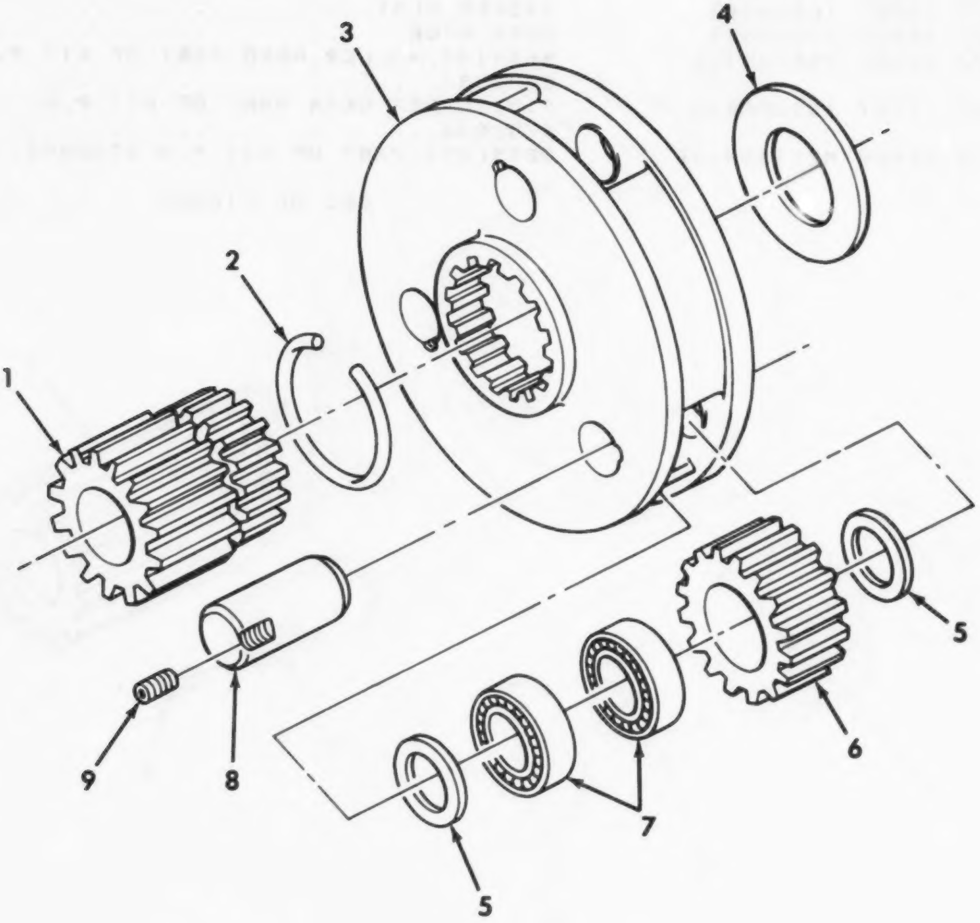

Figure 186. Stage One Carrier Assembly – 13214E2903.

(1) ITEM NO	(2) SMR CODE	(3) CAGEC	(4) PART NUMBER	(5) DESCRIPTION AND USABLE ON CODES(UOC)	(6) QTY
				GROUP A5: WINCH INSTALLATION FIG. 186 STAGE ONE CARRIER ASSEMBLY-13214E2903	
1	PAFZZ	97403	13214E2905	GEAR,SPUR	1
2	PAFZZ	19207	10908535	RING,RETAINING	1
3	XAFZZ	19207	10908542	CARRIER	1
4	PAFZZ	19207	10908650	WASHER,FLAT	1
5	PAFZZ	19207	10908534	WASHER,FLAT	6
6	PAFZZ	19207	10908541	GEAR,SPUR	3
7	PAFZZ	43334	3L04XR1KJ	BEARING,BALL,ANNULA	6
8	PAFZZ	19207	10908536	PIN,STRAIGHT,HEADLE	3
9	PAFZZ	96906	MS51964-66	SETSCREW	3

END OF FIGURE

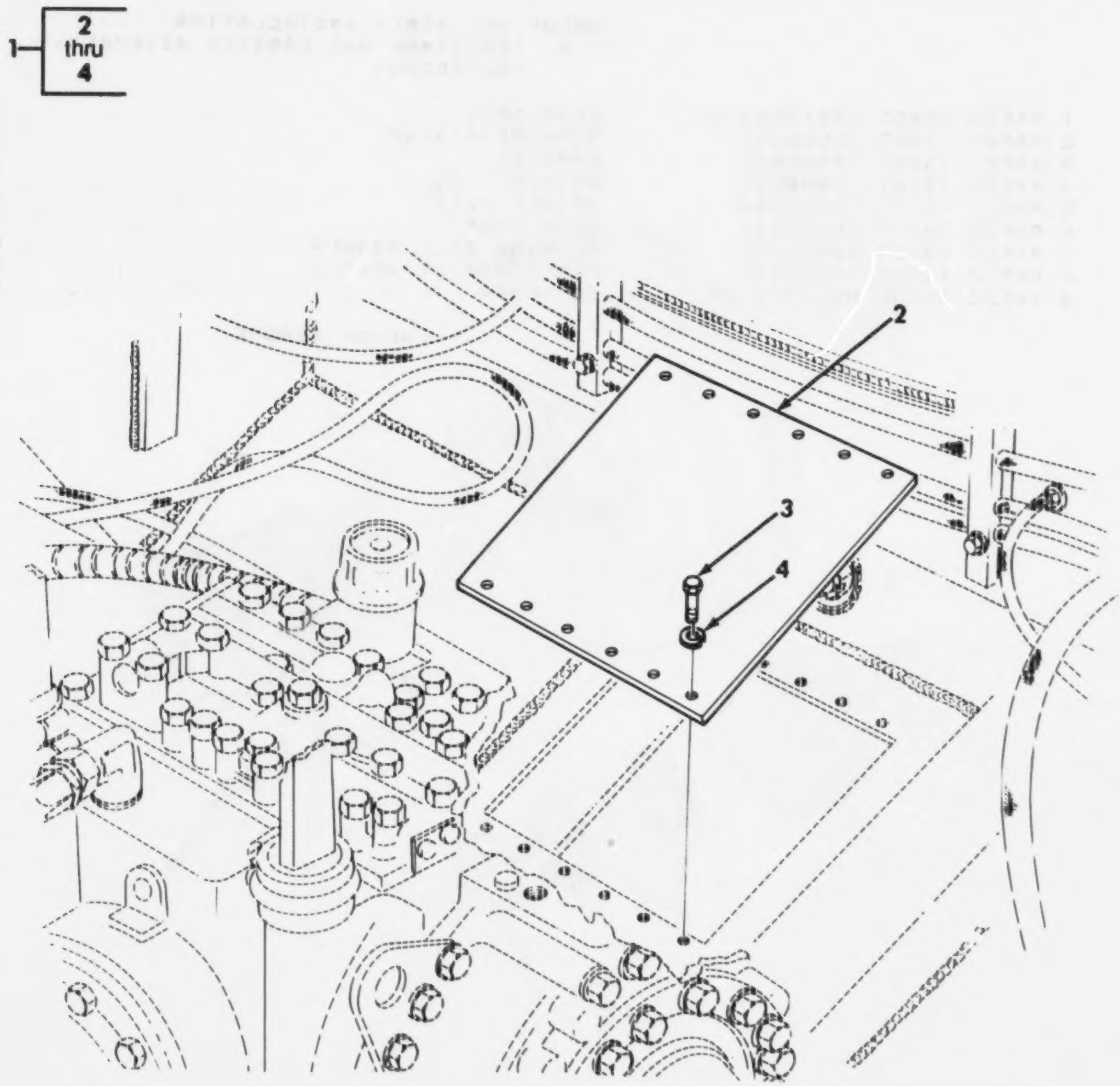

Figure 187. Winch Cover Parts Kit.

(1) ITEM NO	(2) SMR CODE	(3) CAGEC	(4) PART NUMBER	(5) DESCRIPTION AND USABLE ON CODES(UOC)	(6) QTY
				GROUP A6: SPECIAL PURPOSE KITS FIG.187 WINCH COVER PARTS KIT	
1	PBOZZ	19207	5705833	KIT,WINCH COVER.....................	1
2	XDOZZ	97403	13211E8638	.COVER,ACCESS......................	1
3	PAOZZ	96906	MS18154-60	.SCREW,CAP,HEXAGON H................	12
4	PAOZZ	96906	MS35338-46	.WASHER,LOCK.......................	12

END OF FIGURE

(1) ITEM NO	(2) SMR CODE	(3) CAGEC	(4) PART NUMBER	(5) DESCRIPTION AND USABLE ON CODES(UOC)	(6) QTY
				GROUP A7: BULK ITEMS FIG.BULK-1 BULK MATERIALS LIST (NOT ILLUSTRATED)	
1	PAOZZ	81349	M13486/10-1	CABLE,SPECIAL PURPO STRANDED,LOW TENSION,HEAVY DUTY,MULTIPLE CONDUCTORS,UNSHIELDED,CONDUCTOR SIZE 14,INSULATED,.137 DIA..........	V
2	PAOZZ	81349	M13486/2-2	CABLE,SPECIAL PURPO STRANDED,LOW TENSION,HEAVY DUTY,SINGLE CONDUCTOR, SHIELDED,CONDUCTOR SIZE 16, INSULATED,.170 DIA................	V
3	PFOZZ	16003	C43974	CHAIN,WELDLESS WELDLESS,DOUBLE-LOOP PATTERN,TYPE II CLASS 2,TRADE 4	V
4	PFOZZ	81348	RRC271	CHAIN,WELDLESS TYPE 2 CLASS 6 TRADE 1............................	V
5	PFOZZ	81349	M21840TYPE1A,CL1 ,1.00W,BLK3230	FASTNER TAPE,HOOK SYNTHETIC,TYPE 1A,CLASS 1,1.00 IN WIDE,BLACK 3230, 25 YARD SPOOL.......................	V
6	PFFZZ	81349	M21840TYPE1A,CL1 ,1.50W,BLK3230	FASTENER TAPE,HOOK SYNTHETIC,TYPE 1A,CLASS 1,1.50 IN WIDE,BLACK 3230, 25 YARD SPOOL.......................	V
7	PAFZZ	11153	065	FASTENER TAPE,HOOK NYLON,GREEN, 2.00 WIDTH,TYPE 2,CLASS 2...........	V
8	PAFZZ	81337	6-1-5876	FASTENER TAPE,HOOK NYLON,GREEN, 1.00 WIDTH,TYPE 2,CLASS 1...........	V
9	PFOZZ	81349	MILF21840TYPEII. CL1,2.00W,GRN	FASTNER TAPE,PILE NYLON,TYPEII,CL2, 2.00W,GRN 106.........................	V
10	PAOZZ	81337	5-4-1695-4	FASTENER TAPE, PILE NYLON, GREEN, 1.00 WIDTH, CLASS 1................	V
11	PAFZZ	96906	MS35830-14DF	HINGE,BUTT ISSUE LENGTH 84 IN......	V
12	PAOZZ	96906	MS35831-6A	HINGE,BUTT CONTINUOUS,ALUMINUM P/N AND LEAF,TEMPER,HALF HARD,84IN LONG ISSUE LENGTH........................	V
13	PAOZZ	81348	WW-H-1053	HOSE,METALLIC FLEXIBLE,CLASS S, COMP C,TYPE 1, 1.25 ID.............	V
14	PAFZF	98296	56823619-7	HOSE,METALLIC FLEXIBLE,CLASS S, TYPE 2,3.00 ID........................	V
15	PAOZZ	81349	M62217/1-16BULK	HOSE,NONMETALLIC NONMETALLIC, STRAIGHT,SILICONE,POLYESTER REINFORCED,TYPE 1,1.1 IN ID, RANDOM LENGTH..............................	V
16	PAOZZ	81349	M62217/18 BULK L	HOSE,NONMETALLIC TYPE 1,1/2 IN ID, RANDOM LENGTH.......................	V
17	PAOZZ	81349	M62217/1-36	HOSE,NONMETALLIC NONMETALLIC, STRAIGHT,SILICONE,POLYESTER REINFORCED,TYPE 1,2.25 IN ID, RANDOM LENGTH.......................	V
18	PAOZZ	81349	M62217/1-44	HOSE,NONMETALLIC SILICONE, POLYESTER REINFORCED, 2.75 ID.......	V
19	PFOZZ	19207	12334250-19	HOSE,NONMETALLIC TYPE 1,GRADE A, CLASS 2,SIZE *30,RANDOM LENGTH,	V

(1) ITEM NO	(2) SMR CODE	(3) CAGEC	(4) PART NUMBER	(5) DESCRIPTION AND USABLE ON CODES(UOC)	(6) QTY
				3.75 ID..............................	
20	PAOZZ	81349	M23053/1-101-0	INSULATION SLEEVING ELECTRICAL, HEAT SHRINKABLE,POLYCHLOROPRENE, FLEXIBLE,CLASS 1,.250 ID AS SUPPLIED,BLACK....................	V
21	PAOZZ	81349	M23053/1-102-0	INSULATION SLEEVING ELECTRICAL, HEAT SHRINKABLE,POLYCHLOROPRENE, FLEXIBLE,CLASS 1,.375 ID AS SUPPLIED,BLACK....................	V
22	PAOZZ	81349	M23053/1-103-0	INSULATION SLEEVING ELECTRICAL HEAT SHRINKABLE,POLYCHLOROPRENE FLEXIBLE CLASS 1,BLACK...........	V
23	PAOZZ	81349	M23053/1-201-0	INSULATION,SLEEVING RUBBER, POLYCHLOROPRENE,CLASS 2,HEAT SHRINKABLE,.250 ID..................	V
24	PAOZZ	81349	M23053/4-102-0	INSULATION SLEEVING ELECTRICAL, HEAT SHRINKABLE,POLYOLEFIN, SEMIRIGID,CLASS 1, .187 ID AS SUPPLIED, BLACK....................	V
25	PAFZZ	81349	M23053/5-103-9	INSULATION SLEEVING ELECTRICAL, HEAT SHRINKABLE,POLYOLFIN,FLEXIBLE, CROSSLINKED,CLASS 1,.093 ID AS SUPPLIED,WHITE....................	V
26	PAOZZ	81349	M23053/5-108-0	INSULATION SLEEVING ELECTRICAL, HEAT SHRINKABLE,POLYOLEFIN,FLEXIBLE, CROSSLINKED,CLASS 1,.500 ID AS SUPPLIED, BLACK...................	V
27	PFOZZ	81349	M23053/5-305-0	INSULATION SLEEVING INSULATION SLEEVING,ELECTRICAL,HEAT SHRINKABLE, POLYOLEFIN,FLEXIBLE CROSS LINKED, CLASS 3,.187 ID AS SUPPLIED,BLACK...	V
28	PAFZZ	19207	8724762	NONMETALLIC ROD LAMINATED, THERMOSETTING ROD,SPEC L-P-509,.125 DIA,LENGTH AS REQUIRED............	V
29	PAFZZ	19207	8724763	NONMETALLIC ROD LAMINATED, THERMOSETTING ROD,SPEC L-P-509,.156 DIA.............................	V
30	PAFZZ	19207	8724764	NONMETALLIC ROD LAMINATED, THERMOSETTING ROD,SPEC L-P-509,.232 DIA.............................	V
31	PAOZZ	77902	PLEXIGLAS GM	PLASTIC SHEET CLEAR PLASTIC,.125 IN. THICK,GRADE C,TYPE 1...........	V
32	PAOZZ	19207	11677925	ROPE,FIBROUS POLYPROPYLENE,TYPE 1, 5/8-INCH X 48 INCHES...............	V
33	PAOZZ	97403	13204E2894	SEAL,RUBBER SPECIAL EXTRUSION......	V
34	PAOZZ	81349	M13486/1-1	WIRE,ELECTRICAL STRANDED,LOW TENSION,HEAVY DUTY,SINGLE CONDUCTOR, UNSHIELDED,CONDUCTOR SIZE 20, INSULATED,.115 DIA................	V
35	PAOZZ	81349	M13486/1-3	WIRE,ELECTRICAL STRANDED,LOW TENSION,HEAVY DUTY,SINGLE CONDUCTOR, UNSHIELDED,CONDUCTOR SIZE 16,	V

(1) ITEM NO	(2) SMR CODE	(3) CAGEC	(4) PART NUMBER	(5) DESCRIPTION AND USABLE ON CODES(UOC)	(6) QTY
				INSULATED,.135 DIA..................	
36	PAOZZ	81349	M13486/1-5	WIRE,ELECTRICAL STRANDED,LOW TENSION,HEAVY DUTY,SINGLE CONDUCTOR, UNSHIELDED,CONDUCTOR SIZE 14, INSULATED,.160 DIA..................	V
37	PAOZZ	81349	M13486/1-7	WIRE,ELECTRICAL STRANDED,LOW TENSION,HEAVY DUTY,SINGLE CONDUCTOR, UNSHIELDED,CONDUCTOR SIZE 12, INSULATED,.235 DIA..................	V
38	PAOZZ	81349	M13486/1-9	WIRE,ELECTRICAL STRANDED,LOW TENSION,HEAVY DUTY,SINGLE CONDUCTOR, UNSHIELDED,CONDUCTOR SIZE 8, INSULATED,.360 DIA..................	V
39	PAFZZ	81349	M22759/18-16-9	WIRE,ELECTRICAL FLUOROPOLYMER INSULATED,EXTRUDED ETHYLENE TETRAFLUOROETHYLENE COPOLYMER,LIGHT WEIGHT,TIN COATED COPPER CONDUCTOR, 600 VOLT,150 DEG CENTIGRADE,SIZE 16, .070 DIA...........................	V
40	PAFZZ	81349	M22759/18-20-9	WIRE,ELECTRICAL FLUOROPOLYMER INSULATED,EXTRUDED ETHYLENE TETRAFLUOROETHYLENE COPOLYMER,LIGHT WEIGHT,TIN COATED COPPER CONDUCTOR, 600 VOLT,150 DEG CENTIGRADE,SIZE 20, .051 DIA...........................	V
41	PAHZZ	96906	MS20995C47	WIRE,NONELECTRICAL CORROSION RESISTANT STEEL,.047 DIA............	V
42	PAFZZ	81348	QQW461	WIRE,NONELECTRICAL CARBON STEEL, ZINC COATED,.091 DIAMETER...........	V
43	PAOZZ	00624	900010-32C	WIRE,NONELECTRICAL CORROSION RESISTANT STEEL,.032 DIA............	V

END OF FIGURE

(1) ITEM NO	(2) SMR CODE	(3) CAGEC	(4) PART NUMBER	(5) DESCRIPTION AND USABLE ON CODES(UOC)	(6) QTY
				GROUP 8B2: REPAIR PARTS KITS	
				FIG. KIT-1 REPAIR PARTS KITS (NOT ILLUSTRATED)	
	PADZZ	05842	KP4033-9012	PARTS KIT,SEAL REPL................	1
				KEY,MACHINE (1) 86-14	
				PACKING,PREFORMED (1) 86-37	
				PACKING,PREFORMED (2) 86-36	
				PACKING,PREFORMED (1) 86-33	
				PACKING,PREFORMED (1) 86-46	
				PACKING,PREFORMED (10) 86-28	
				PACKING,PREFORMED (4) 86-44	
				PACKING,PREFORMED (10) 86-23	
				PACKING,PREFORMED (1) 86-40	
				SEAL (1) 86-6	
				SEAL (1) 86-5	
				WASHER,BACKUP (3) 86-35	
				WASHER,BACKUP (1) 86-32	
	PADZZ	53964	SA910070	FILTER ELEMENT,FLUI SEPERATOR......	1
				FILTER ELEMENT,FLUI(1) 53-6	
				GASKET (1) 53-5	
				O-RING (1) 53-4	
	PADZZ	97403	13215E6617	GEAR SET,BEVEL,MATC.................	1
				GEAR,BEVELED (1) 147-11	
				PINION ASSEMBLY (1) 147-27	
	PAHZZ	15434	3013497	GASKET SET.........................	1
				GASKET (2) 101-10	
				GASKET (2) 101-8	
	PADZZ	15434	3801539	GASKET SET.........................	1
				GASKET (1) 92-2	
				GASKET (2) 101-10	
				GASKET (2) 101-8	
	PAHZZ	64294	46095-6	PARTS KIT,MINOR....................	1
				GASKET (1) 183-27	
				PACKING,PREFORMED (1) 183-5	
				PLATE,WEAR (1) 183-14	
				SCREW,CAP,SOCKET HE(4) 183-1	
				SEAL,PLAIN ENCASED (1) 183-4	
				WASHER,FLAT (4) 183-30	
	PAFZZ	19207	57K1015	PARTS KIT,SEAL REPL................	1
				PACKING,PREFORMED (9) 89-5	
	PAFZZ	19207	57K1143	PARTS KIT,CYLINDER.................	1
				PACKING,PREFORMED (1) 177-9	
				PACKING,PREFORMED (1) 177-15	
				PACKING,PREFORMED (1) 177-2	
				RING,BACKUP (1) 177-3	
				RING,BUFFER (1) 177-5	
				RING,WEAR (2) 177-6	
				RING,WEAR (2) 177-13	
				SEAL (1) 177-7	
				SEAL (1) 177-14	
				WIPER (1) 177-8	

(1) ITEM NO	(2) SMR CODE	(3) CAGEC	(4) PART NUMBER	(5) DESCRIPTION AND USABLE ON CODES(UOC)	(6) QTY
	PAHZZ	19207	57K1144	PARTS KIT,LINEAR AC.................	1
				PACKING,PREFORMED (1) 60-11	
				PACKING,PREFORMED (1) 60-8	
				PACKING HEAD,STATIC(1) 60-2	
				RETAINER,PACKING (1) 60-3	
				RING,BUFFER (1) 60-4	
				RING WEAR (2) 60-5	
				RING,WEAR (2) 60-9	
				SEAL (1) 60-10	
				SEAL,ROD (1) 60-6	
				WIPER (1) 60-7	
	PAHZZ	19207	57K1145	PARTS KIT,SEAL REPL.................	1
				PACKING,PREFORMED (1) 61-13	
				PACKING,ROD STATIC (1) 61-8	
				PACKING,HEAD STATIC(1) 61-2	
				RETAINER,HEAD STATI(1) 61-3	
				RING,SEAL (1) 61-4	
				RING,WEAR (4) 61-11	
				RING,WEAR (4) 61-5	
				SEAL (1) 61-12	
				SEAL,ROD (1) 61-6	
				WIPER,ROD (1) 61-7	
	PAHZZ	19207	57K1146	PARTS KIT,CYLINDER..................	1
				PACKING,PREFORMED (1) 179-6	
				PACKING,PREFORMED (1) 179-10	
				PACKING,PREFORMED (1) 179-1	
				RETAINER,PACKING (1) 179-2	
				RING,WEAR (1) 179-8	
				SEAL,PISTON (1) 179-9	
				SEAL,ROD (1) 179-4	
				WIPER,ROD (1) 179-5	
	PAFZZ	19207	5702992	PARTS KIT,HYDRAULIC.................	1
				BEARING,ROLLER,NEED(3) 185-6	
				PIN,PLANET GEAR (3) 185-7	
				SETSCREW (3) 185-8	
	PAOZZ	19207	5705404	TRACK SHOE SET,VEHI.................	1
				NUT,PLAIN,HEXAGON H(1) 155-7	
				TRACK PAD (1) 155-4	
				WASHER,FLAT (1) 155-8	
	PAFZZ	19207	5705405	PARTS KIT,HYDRAULIC.................	1
				BLADDER ASSEMBLY (1) 173-8	
				GROMMET (1) 173-16	
				PACKING,PREFORMED (1) 173-15	
				RING,RETAINING (1) 173-14	
				VALVE,PNEUMATIC TAN(1) 173-10	
	PAFZZ	19207	5705406	PARTS KIT,HYDRAULIC.................	1
				PACKING,PREFORMED (1) 80-8	
				PACKING,PREFORMED (1) 80-12	
				RING,PACKING (2) 80-11	
				RING,PISTON (2) 80-10	
	PAOZZ	19207	5705407	PARTS KIT,FLUID PRE.................	1
				ELEMENT (1) 83-12	

(1) ITEM NO	(2) SMR CODE	(3) CAGEC	(4) PART NUMBER	(5) DESCRIPTION AND USABLE ON CODES(UOC)	(6) QTY
				GASKET (1) 83-6	
				GASKET,COVER (1) 83-8	
				GASKET,ELEMENT (1) 83-11	
	PAOZZ	19207	5705408	PARTS KIT,FLUID PRE................	1
				ELEMENT (1) 82-15	
				PACKING,PREFORMED (1) 82-12	
				PACKING,PREFORMED (1) 82-14	
				RETAINER,PACKING (1) 82-13	
	PAOZZ	19207	5705413	PARTS KIT,FLUID PRE................	1
				FILTER ELEMENT,FLUI(1) 106-6	
				PACKING,PREFORMED (1) 106-5	
	PAOZZ	19207	5705422	PARTS KIT,FLUID PRE FILTER ELEMENT AND GASKETS........................	1
				ELEMENT (1) 123-13	
				GASKET (1) 123-12	
				WASHER,FLAT (1) 123-21	
	PAFZZ	19207	5705423	PARTS KIT,HYDRAULIC................	1
				PACKING,PREFORMED (1) 117-12	
				PLATE (2) 117-9	
				RETAINER,PACKING (1) 117-17	
				SEAL (2) 117-8	
				SEAL,PLAIN (1) 117-15	
				SEAL,RUBBER SPECIAL(2) 117-7	
	PADZZ	19207	5705558	PARTS KIT,SEAL REPL................	8
				BOLT,SELF-LOCKING (6) 174-6	
				PACKING,PREFORMED (1) 174-3	
				RING,BACKUP (1) 174-2	
				SEAL (1) 174-1	
	PADZZ	19207	5705559	PARTS KIT,LINEAR AC................	1
				GASKET (2) 167-8	
				PACKING,PREFORMED (2) 167-9	
				PACKING,PREFORMED (1) 170-20	
				PACKING,PREFORMED (3) 170-19	
				PACKING,PREFORMED (1) 170-29	
				PACKING,PREFORMED (1) 170-2	
				PACKING,PREFORMED (2) 170-11	
				PACKING,PREFORMED (1) 170-34	
				PACKING,PREFORMED (1) 170-38	
				PACKING,PREFORMED (3) 170-8	
				PACKING,PREFORMED (1) 170-36	
				PACKING,PREFORMED (1) 170-26	
				PACKING,PREFORMED (9) 170-23	
				PACKING,PREFORMED (1) 170-13	
				PACKING,PREFORMED (1) 170-6	
				PACKING,PREFORMED (1) 169-20	
				PACKING,PREFORMED (6) 169-30	
				PACKING,PREFORMED (2) 169-5	
				PACKING,PREFORMED (2) 169-1	
				PACKING,PREFORMED (2) 169-9	
				PACKING,PREFORMED (1) 167-6	
				PACKING,PREFORMED (4) 167-2	
				PACKING,PREFORMED (2) 167-3	

(1) ITEM NO	(2) SMR CODE	(3) CAGEC	(4) PART NUMBER	(5) DESCRIPTION AND USABLE ON CODES(UOC)	(6) QTY
				RETAINER,PACKING (2) 170-12	
				RETAINER,PACKING (3) 170-18	
				RETAINER,PACKING (1) 170-7	
				RETAINER,PACKING (1) 170-28	
				RETAINER,PACKING (1) 170-21	
				RETAINER,PACKING (1) 167-7	
				RING,BACKUP (2) 169-8	
				RING,HUB SEAL (2) 169-11	
				RING,PISTON (2) 169-27	
				SEAL,HUB (2) 169-12	
				SEAL,VANE (6) 169-31	
				SHIM (V) 169-13	
				SHIM (V) 169-14	
				SPRING,WAVE (2) 169-10	
	PADZZ	19207	5705560	PARTS KIT,HYDRAULIC................	1
				PACKING,PREFORMED (1) 172-24	
				PACKING,PREFORMED (6) 172-17	
				PACKING,PREFORMED (2) 172-8	
				PACKING,PREFORMED (2) 171-3	
				PACKING,PREFORMED (2) 171-1	
				RING,BACKUP (2) 172-7	
				RING,HUB SEAL (2) 172-10	
				RING,PISTON (2) 172-14	
				SEAL,HUB (2) 172-11	
				SEAL,VANE (6) 172-18	
				SHIM (V) 172-12	
				SHIM (V) 172-13	
				SPRING,WAVE (2) 172-9	

END OF FIGURE

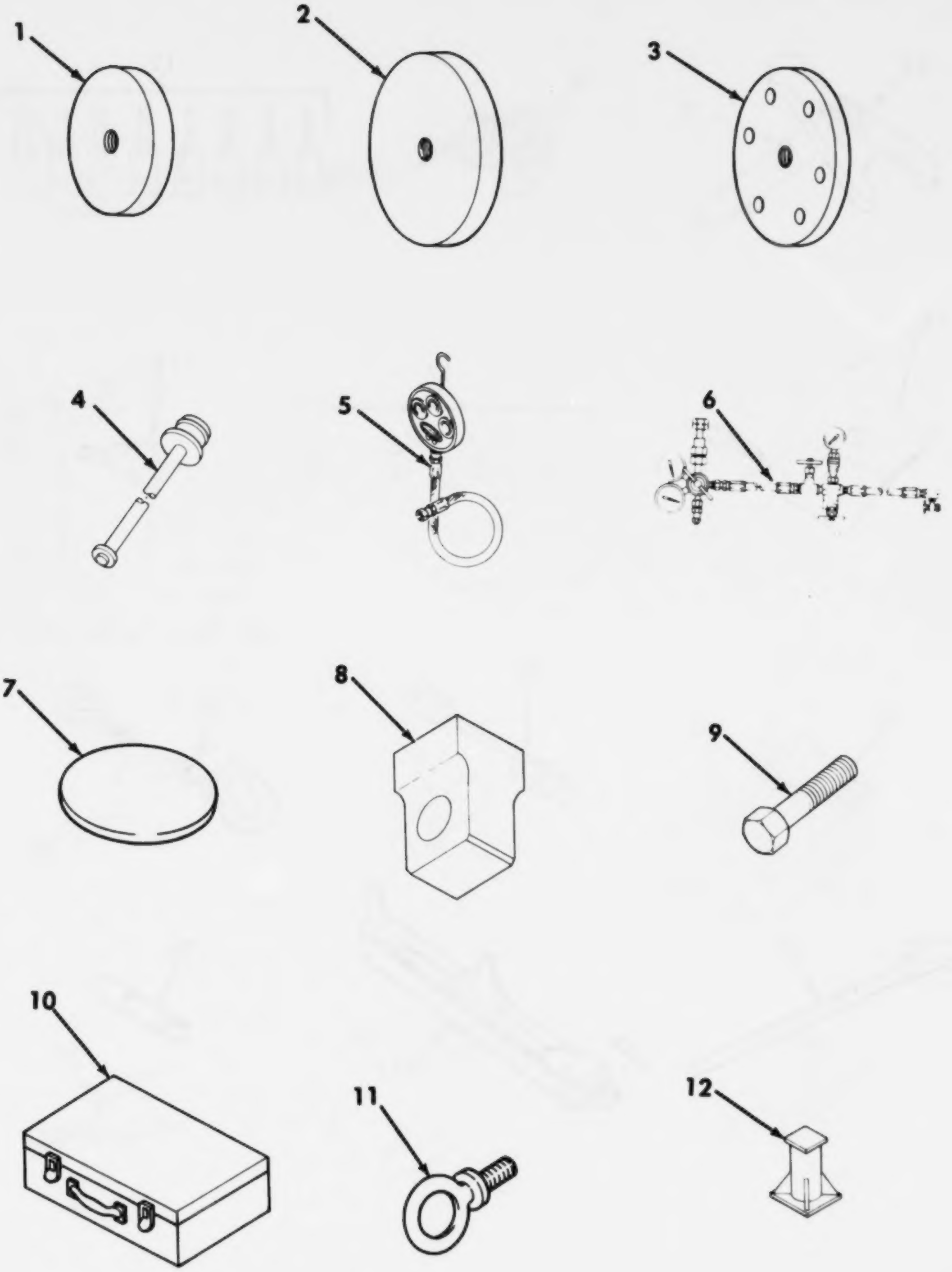

Figure 188. Special Tools – Unit, Direct, and General Support (Sheet 1 of 4).

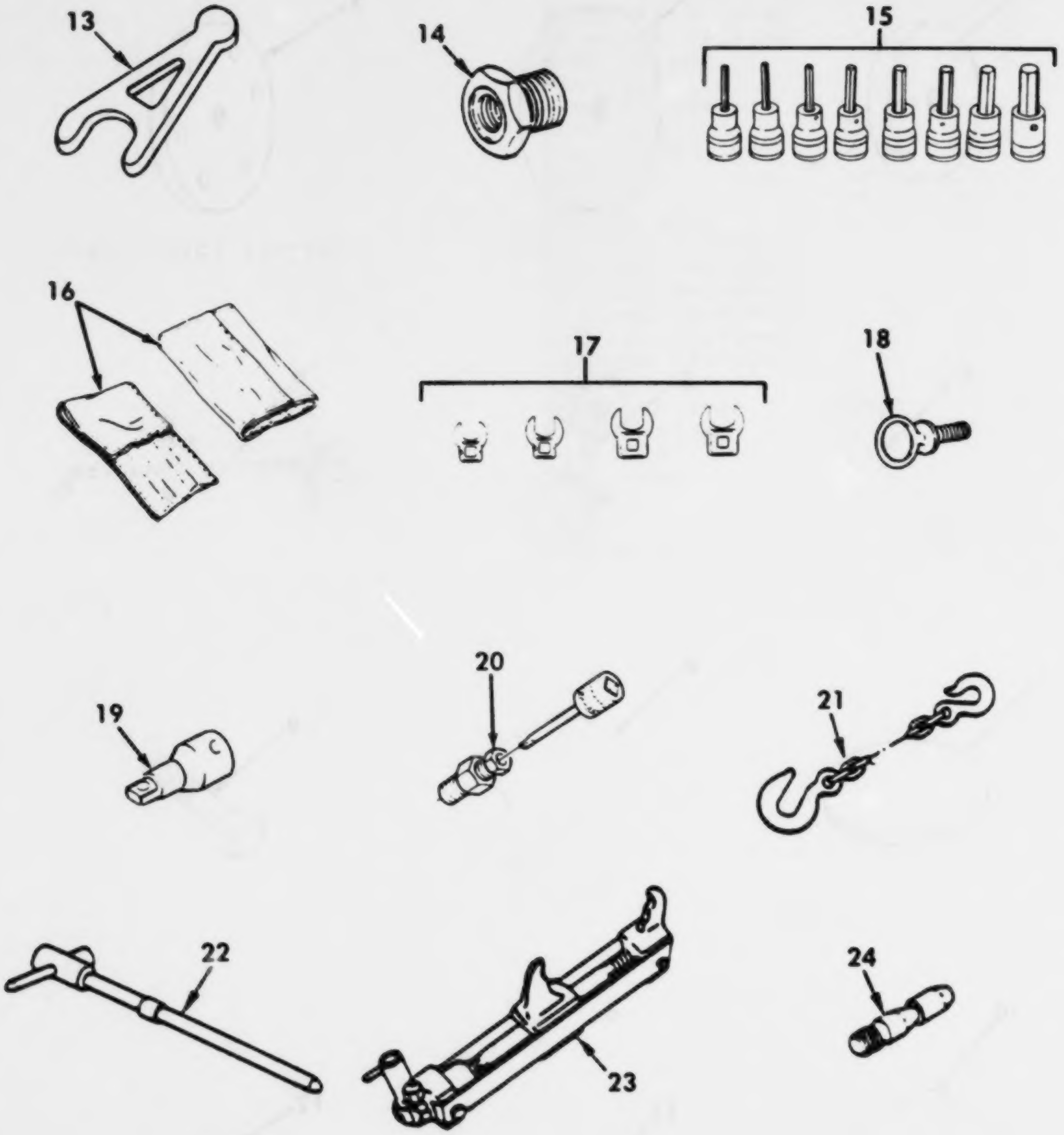

Figure 188. Special Tools – Unit, Direct, and General Support (Sheet 2 of 4).

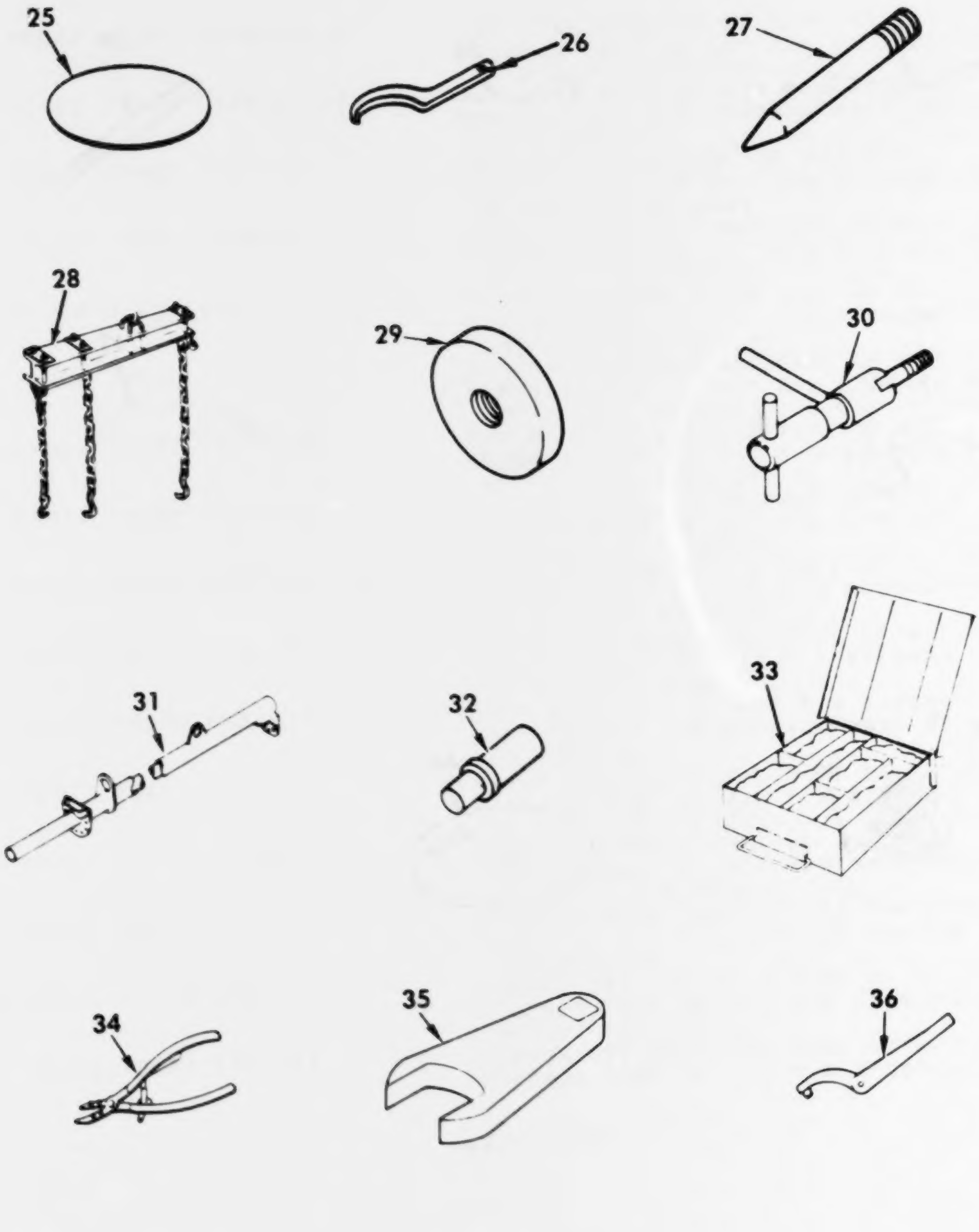

Figure 188. Special Tools – Unit, Direct, and General Support (Sheet 3 of 4).

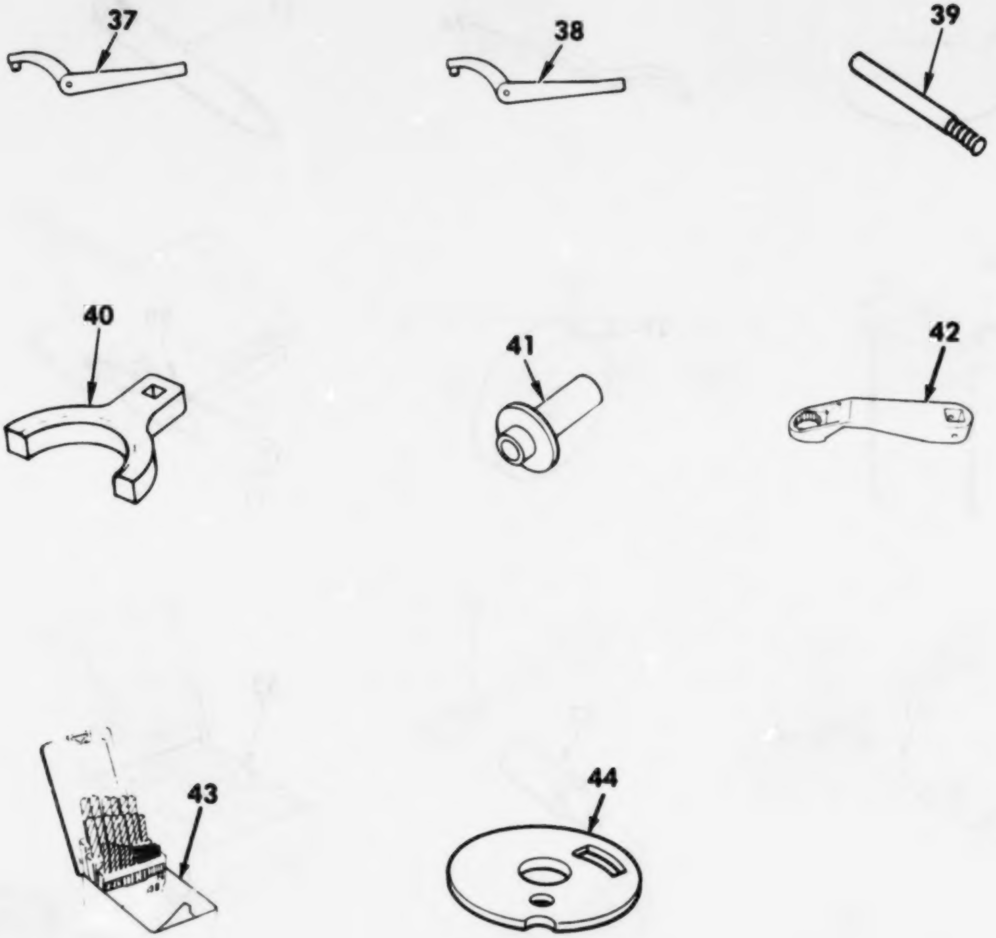

Figure 188. Special Tools – Unit, Direct, and General Support (Sheet 4 of 4).

(1) ITEM NO	(2) SMR CODE	(3) CAGEC	(4) PART NUMBER	(5) DESCRIPTION AND USABLE ON CODES(UOC)	(6) QTY
				GROUP AY: SUPPORT EQUIPMENT AND SPECIAL TOOLS	
				FIG. 188 SPECIAL TOOLS - UNIT, DIRECT, AND GENERAL SUPPORT	
1	PEOZZ	19207	12355511-4	INSERTER, BEARING AN PART OF KIT P/N 5705425 PART OF KIT P/N 5705426 PART OF KIT P/N 5705427................	
2	PEOZZ	19207	12355511-5	REPLACER PART OF KIT P/N 5705425 PART OF KIT P/N 5705426 PART OF KIT P/N 5705427.........................	
3	PEOZZ	19207	12355437	INSERTER, SEAL PART OF KIT P/N 5705425 PART OF KIT P/N 5705426 PART OF KIT P/N 5705427................	
4	PEOZZ	19207	12355501	PLUG, HYDRAULIC TANK PART OF KIT P/N 5705425 PART OF KIT P/N 5705426 PART OF KIT P/N 5705427................	
5	PEOZZ	08832	GS5	TESTER, HYDRAULIC HO PART OF KIT P/N 5705425 PART OF KIT P/N 5705426 PART OF KIT P/N 5705427................	
6	PEOOO	19200	12252157	ACCUMULATOR CHARGIN PART OF KIT P/N 5705425 PART OF KIT P/N 5705426 PART OF KIT P/N 5705427................	
7	PEOZZ	19207	12355436	PAD, REMOVER ROADWHE PART OF KIT P/N 5705425 PART OF KIT P/N 5705426 PART OF KIT P/N 5705427................	
8	PEOZZ	19207	12355451	SOCKET, SQUARE PLUG PART OF KIT P/N 5705425 PART OF KIT P/N 5705426 PART OF KIT P/N 5705427................	
9	PEOZZ	96906	MS90728-118	SCREW, CAP, HEXAGON H PART OF KIT P/N 5705425 PART OF KIT P/N 5705426 PART OF KIT P/N 5705427................	
10	PEOZZ	19207	5705562	PARTS KIT, HYDRAULIC PART OF KIT P/N 5705425 PART OF KIT P/N 5705426 PART OF KIT P/N 5705427................	
11	PEOZZ	96906	MS51937-5	BOLT, EYE PART OF KIT P/N 5705427 PART OF KIT P/N 5705426 PART OF KIT P/N 5705425.........................	
12	PEOZZ	19207	12355345	STAND, VEHICLE SUPPO PART OF KIT P/N 5705425 PART OF KIT P/N 5705426 PART OF KIT P/N 5705427................	
13	PEOZZ	19207	12355582	JACK, ROADWHEEL PART OF KIT P/N 5705425 PART OF KIT P/N 5705426 PART OF KIT P/N 5705427................	
14	PEOZZ	79470	C3109X6X2	BUSHING, PIPE PART OF KIT P/N 5705425 PART OF KIT P/N 5705426 PART OF KIT P/N 5705427......................	
15	PEOZZ	55719	208FA	SOCKET SET, SOCKET W PART OF KIT P/N 5705425 PART OF KIT P/N 5705426 PART OF KIT P/N 5705427................	
16	PEOZZ	19207	5705565	WRENCH SET, OPEN END PART OF KIT P/N 5705425 PART OF KIT P/N 5705426 PART	

(1) ITEM NO	(2) SMR CODE	(3) CAGEC	(4) PART NUMBER	(5) DESCRIPTION AND USABLE ON CODES(UOC)	(6) QTY
				OF KIT P/N 5705427.................	
17	PEOZZ	19207	5705566	WRENCHSET,CROWFOOT, PART OF KIT P/N 5705425 PART OF KIT P/N 5705426 PART OF KIT P/N 5705427.................	
18	PEOZZ	96906	MS51937-7	BOLT,EYE PART OF KIT P/N 5705425 PART OF KIT P/N 5705426 PART OF KIT P/N 5705427..........................	
19	PEOZZ	55719	GAX-1	ADAPTER,SOCKET WREN PART OF KIT P/N 5705425 PART OF KIT P/N 5705426 PART OF KIT P/N 5705427.................	
20	PEFZZ	15434	3375981	ADJUSTING TOOL PART OF KIT P/N 5705425 PART OF KIT P/N 5705426.....	
21	PEFZZ	97403	13211E9331	CHAIN ASSEMBLY,SING PART OF KIT P/N 5705426 PART OF KIT P/N 5705425.....	
22	PEFZZ	19207	7083639	DRIFTPIN PART OF KIT P/N 5705425 PART OF KIT P/N 5705426............	
23	PEFZZ	19207	8741739	FIXTURE,TRACK CONNE PART OF KIT P/N 5705425 PART OF KIT P/N 5705426.....	
24	PEFZZ	19207	12332340	PIN,STRAIGHT,KNURLE PART OF KIT P/N 5705425 PART OF KIT P/N 5705426.....	
25	PEFZZ	97403	13211E8658	SPACER,PLATE PART OF KIT P/N 5705425 PART OF KIT P/N 5705426...........	
26	PEFZZ	19207	12355454	WRENCH,SPANNER PART OF KIT P/N 5705425 PART OF KIT P/N 5705426.....	
27	PEFZZ	19207	12355438	PIN,STRAIGHT,THREAD PART OF KIT P/N 5705425 PART OF KIT P/N 5705426.....	
28	PEFZZ	19207	12355523	SLING,POWERPACK PART OF KIT P/N 5705425 PART OF KIT P/N 5705426.....	
29	PEFZZ	19207	12355510-1	INSERTER,BEARING AN PART OF KIT P/N 5705425 PART OF KIT P/N 5705426.....	
30	PEFZZ	19207	12355536	WRENCH,CAM ADJUSTME PART OF KIT P/N 5705425 PART OF KIT P/N 5705426.....	
31	PEFZZ	97403	13214E1988	SLING,ACTUATOR REMO PART OF KIT P/N 5705425 PART OF KIT P/N 5705426.....	
32	PEFZZ	19207	12355441	INSERTER,BEARING AN PART OF KIT P/N 5705425 PART OF KIT P/N 5705426.....	
33	PEFZZ	83324	K4-621-621L	TOOL KIT,SCREW THRE PART OF KIT P/N 5705425 PART OF KIT P/N 5705426.....	
34	PEFZZ	79136	6900	PLIERS,RETAINING RI PART OF KIT P/N 5705425 PART OF KIT P/N 5705426.....	
35	PEFZZ	19207	12355452	CROWFOOT ATTACHMENT PART OF KIT P/N 5705425 PART OF KIT P/N 5705426.....	
36	PEFZZ	65814	0-474	WRENCH,SPANNER PART OF KIT P/N 5705425 PART OF KIT P/N 5705426.....	
37	PEFZZ	19207	11602326	WRENCH,SPANNER PART OF KIT P/N 5705425 PART OF KIT P/N 5705426.....	
38	PEFZZ	55719	APS357	WRENCH,SPANNER PART OF KIT P/N 5705425 PART OF KIT P/N 5705426.....	
39	PEFZZ	19207	12355519	PIN,STRAIGHT,THREAD PART OF KIT P/N 5705425 PART OF KIT P/N 5705426.....	
40	PEFZZ	19207	12355559	WRENCH,SPANNER PART OF KIT P/N 5705425 PART OF KIT P/N 5705426.....	

(1) ITEM NO	(2) SMR CODE	(3) CAGEC	(4) PART NUMBER	(5) DESCRIPTION AND USABLE ON CODES(UOC)	(6) QTY
41	PEFZZ	19207	12355515	INSERTER,SEAL PART OF KIT P/N 5705425 PART OF KIT P/N 5705426.....	
42	PEFZZ	K5547	J-38544	WRENCH PART OF KIT P/N 5705425 PART OF KIT P/N 5705426...................	
43	PEFZZ	55719	DBC229	DRILL SET,TWIST COBALT PART OF KIT P/N 5705425 PART OF KIT P/N 5705426.	
44	PEFZZ	19207	12379458	TOOL,LOCKPLATE PART OF KIT P/N 5705425 PART OF KIT P/N 5705426.....	

END OF FIGURE

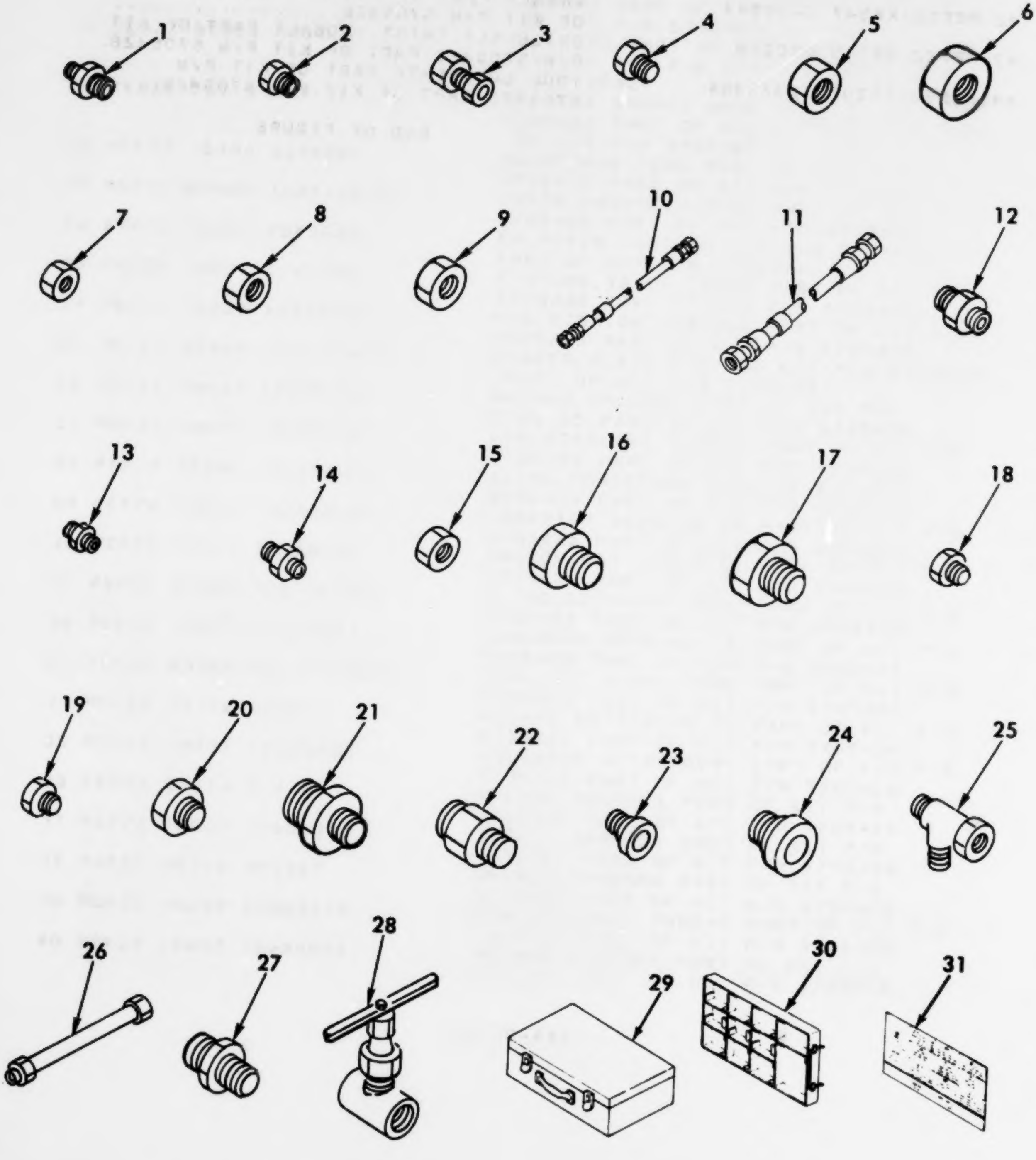

Figure 189. Parts Kit, Hydraulic Troubleshooting –P/N, 5705562.

(1) ITEM NO	(2) SMR CODE	(3) CAGEC	(4) PART NUMBER	(5) DESCRIPTION AND USABLE ON CODES(UOC)	(6) QTY
				GROUP AY: SUPPORT EQUIPMENT AND SPECIAL TOOLS	
				FIG. 189 PARTS KIT, HYDRAULIC TROUBLESHOOTING- P/N, 5705562	
1	PAOZZ	96906	MS51500A8-4	ADAPTER,STRAIGHT,PI.................	
2	PAOZZ	96906	MS51503A4	ADAPTER,STRAIGHT,PI.................	
3	PAOZZ	01276	2242-8-8S	ADAPTER,STRAIGHT,PI.................	
4	PAOZZ	01276	2081-8-2S	BUSHING,PIPE.......................	
5	PAOZZ	96906	MS51532B10	CAP,TUBE...........................	
6	PAOZZ	96906	MS51532B12	CAP,TUBE...........................	
7	PAOZZ	96906	MS51532B4	CAP,TUBE...........................	
8	PAOZZ	96906	MS51532B6	CAP,TUBE...........................	
9	PAOZZ	96906	MS51532B8	CAP,TUBE...........................	
10	PAOZZ	19207	12355351	HOSE ASSEMBLY,NONME.................	
11	PAOZZ	19207	12355352	HOSE ASSEMBLY,NONME.................	
12	PAOZZ	96906	MS51519B10S	NIPPLE,TUBE........................	
13	PAOZZ	96906	MS51519A4	NIPPLE,TUBE........................	
14	PAOZZ	96906	MS51519A8	NIPPLE,TUBE........................	
15	PAOZZ	79470	C5105X6	NUT,TUBE COUPLING 3/8 OD...........	
16	PAOZZ	96906	MS51518B10	PLUG,MACHINE THREAD 5/8 OD.........	
17	PAOZZ	96906	MS51518B12	PLUG,TUBE FITTING,T 3/4 OD.........	
18	PAOZZ	96906	MS51518B4	PLUG,TUBE FITTING,T 1/4 OD.........	
19	PAOZZ	96906	MS51518B6	PLUG,MACHINE THREAD 3/8 OD.........	
20	PAOZZ	96906	MS51518B8	PLUG,TUBE FITTING,T 1/2 OD.........	
21	PAOZZ	96906	MS24399-19	REDUCER,TUBE 3/4 X 3/8.............	
22	PAOZZ	81343	10-8 070123C	REDUCER BODY,TUBE 5/8 X 1/2........	
23	PAOZZ	96906	MS51534A6-4	REDUCER,TUBE 3/8 X 1/4.............	
24	PAOZZ	96906	MS51534A8-4	REDUCER BODY,TUBE 1/2 X 1/4........	
25	PAOZZ	96906	MS51523A8	TEE,TUBE...........................	
26	PAOZZ	19207	12355353	COUPLING,TUBE 1/2 OD...............	
27	PAOZZ	96906	MS24593-8	VALVE,CHECK........................	
28	PAOZZ	97399	10FO-1-3T	VALVE,GLOBE........................	
29	PBOZZ	19207	12367609	BOX,ACCESSORIES STO.................	
30	PBOZZ	19207	12367607	TRAY ASSEMBLY......................	
31	PBOZZ	19207	12367608	DECAL HYDRAULIC TROUBLESHOOTING KIT	

END OF FIGURE

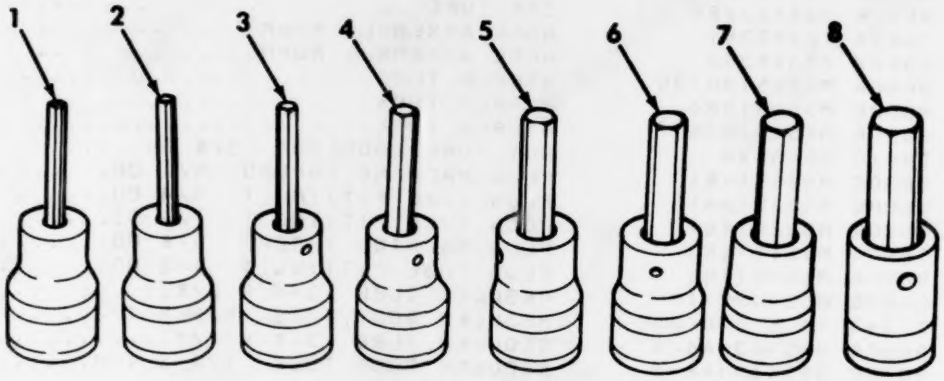

Figure 190. Socket Set, Socket Wrench – P/N, 208FA.

(1) ITEM NO	(2) SMR CODE	(3) CAGEC	(4) PART NUMBER	(5) DESCRIPTION AND USABLE ON CODES(UDC)	(6) QTY
				GROUP AY: SUPPORT EQUIPMENT AND SPECIAL TOOLS	
				FIG. 190 SOCKET SET, SOCKET WRENCH- P/N, 208FA	
1	PEOZZ	55719	FA4A	SOCKET WRENCH ATTAC 1/8 INCH.......	
2	PEOZZ	55719	FA4.5A	SOCKET WRENCH ATTAC 9/64 INCH......	
3	PEOZZ	55719	FA5A	BIT,SCREWDRIVER 5/32 INCH...........	
4	PEOZZ	55719	FA6A	SOCKET WRENCH ATTAC 3/16 INCH......	
5	PEOZZ	55719	FA7A	SOCKET WRENCH ATTAC 7/32 INCH......	
6	PEOZZ	55719	FA8A	SOCKET WRENCH ATTAC 1/4 INCH.......	
7	PEOZZ	03914	FA10B	SOCKET WRENCH ATTAC 5/16 INCH......	
8	PEOZZ	55719	FA12A	SOCKET WRENCH ATTAC 3/8 INCH.......	

END OF FIGURE

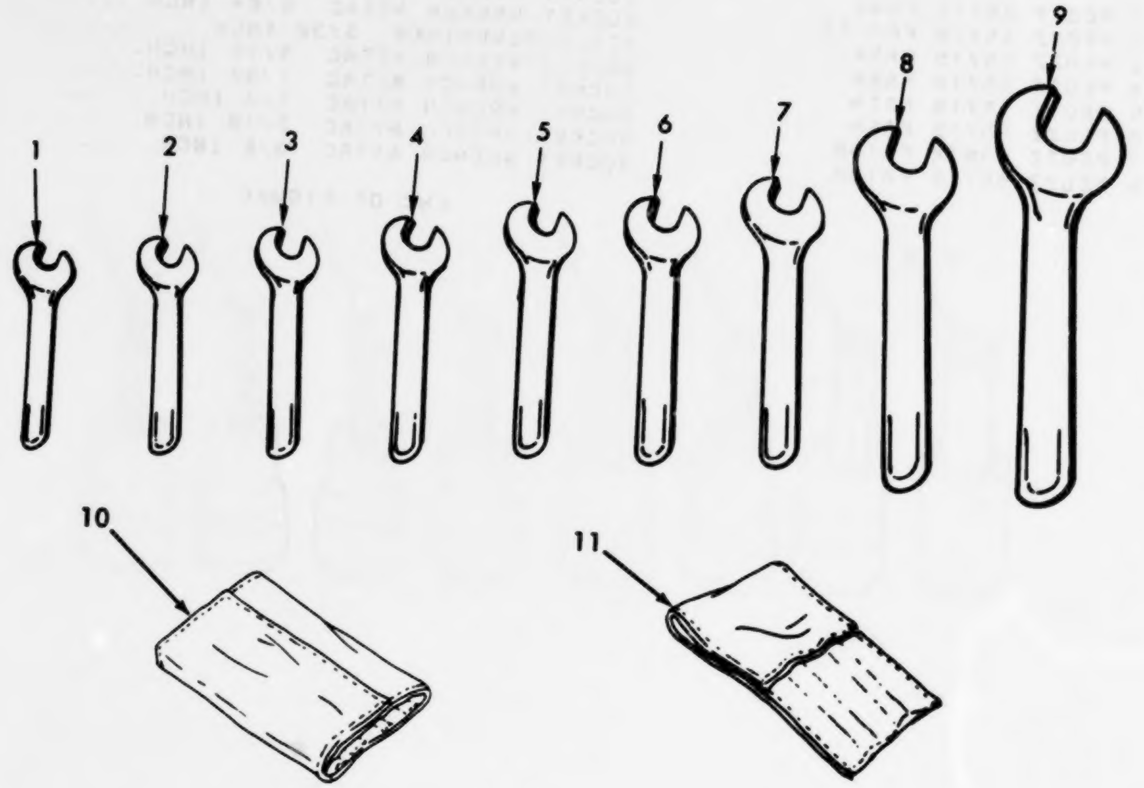

Figure 191. Wrench Set, Open End – P/N, 5705565.

(1) ITEM NO	(2) SMR CODE	(3) CAGEC	(4) PART NUMBER	(5) DESCRIPTION AND USABLE ON CODES(UOC)	(6) QTY
				GROUP AY: SUPPORT EQUIPMENT AND SPECIAL TOOLS	
				FIG. 191 WRENCH SET, OPEN END- P/N, 5705565	
1	PEOZZ	07971	1234	WRENCH, OPEN END 1-1/16 IN..........	
2	PEOZZ	07971	1236	WRENCH, OPEN END 1-1/8 IN...........	
3	PEOZZ	03914	28-038	WRENCH, OPEN END 1-3/16 IN..........	
4	PEOZZ	07971	1240	WRENCH, OPEN END 1-1/4 IN...........	
5	PEOZZ	30106	1242	WRENCH, OPEN END 1-5/16 IN..........	
6	PEOZZ	07971	1244	WRENCH, OPEN END 1-3/8 IN...........	
7	PEOZZ	07971	1248	WRENCH, OPEN END 1-1/2 IN...........	
8	PEOZZ	30106	1260	WRENCH, OPEN END 1-7/8 IN...........	
9	PEOZZ	07971	1272S	WRENCH, OPEN END 2-1/2 IN...........	
10	PEOZZ	19207	12362149	BAG, TOOLS AND SPARE.................	
11	PEOZZ	19207	12362150	BAG, TOOLS AND SPARE.................	

END OF FIGURE

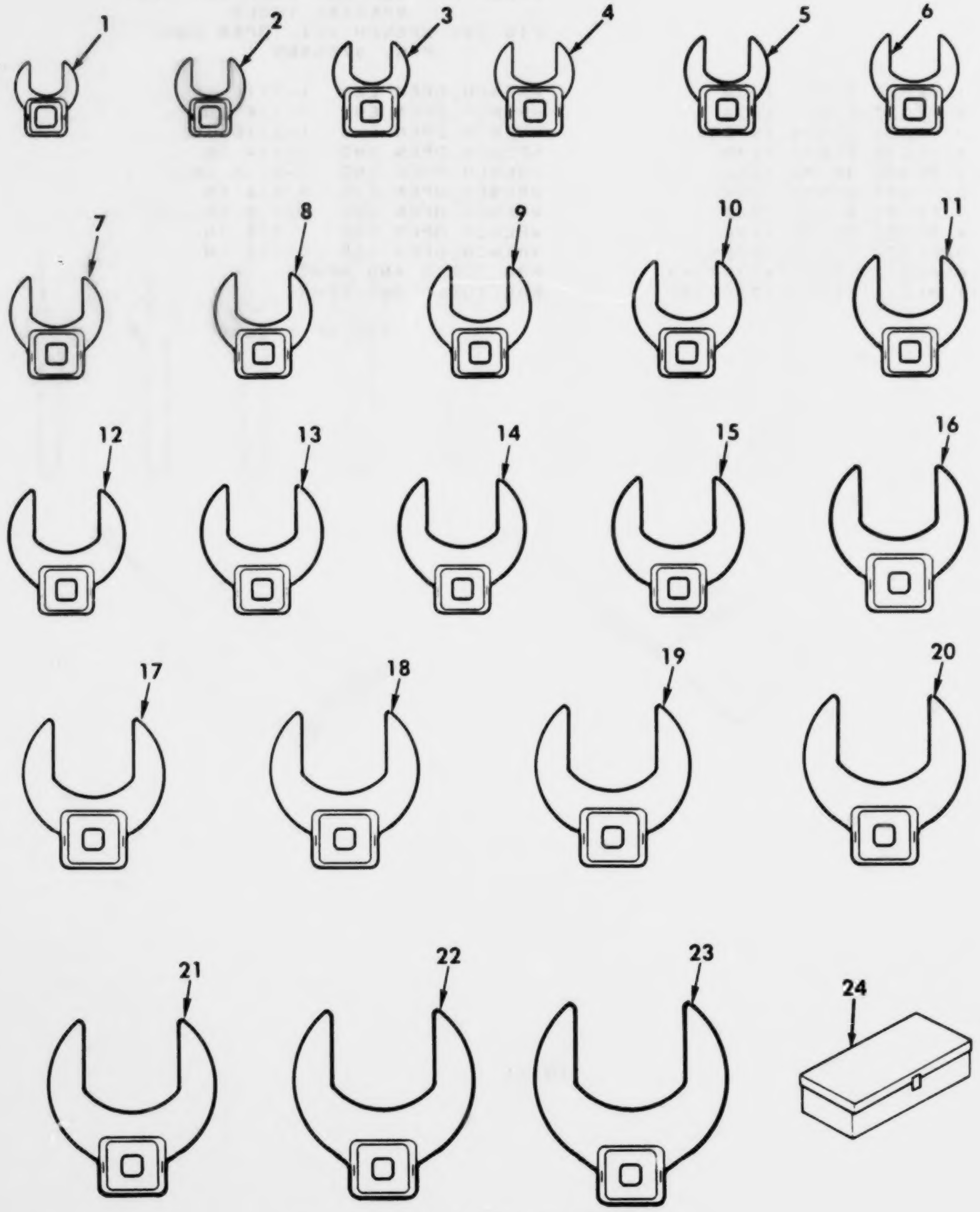

Figure 192. Wrench Set, Crowfoot – P/N, 5705566.

(1) ITEM NO	(2) SMR CODE	(3) CAGEC	(4) PART NUMBER	(5) DESCRIPTION AND USABLE ON CODES(UOC)	(6) QTY
				GROUP AY: SUPPORT EQUIPMENT AND SPECIAL TOOLS	
				FIG. 192 WRENCH SET, CROWFOOT- P/N, 5705566	
1	PEOZZ	K5773	FC18	CROWFOOT ATTACHMENT 9/16 IN........	
2	PEOZZ	K5773	FC20	CROWFOOT ATTACHMENT 5/8 IN.........	
3	PEOZZ	K5773	FC22	CROWFOOT ATTACHMENT 11/16 IN.......	
4	PEOZZ	K5773	FC24	CROWFOOT ATTACHMENT 3/4 IN.........	
5	PEOZZ	K5773	FC26	CROWFOOT ATTACHMENT 13/16 IN.......	
6	PEOZZ	55719	FC28	CROWFOOT ATTACHMENT 7/8 IN.........	
7	PEOZZ	K5773	FC30	CROWFOOT ATTACHMENT 15/16 IN.......	
8	PEOZZ	55719	AN8506-10	CROWFOOT ATTACHMENT 1 IN...........	
9	PEOZZ	55719	FC34	CROWFOOT ATTACHMENT 1-1/16 IN......	
10	PEOZZ	55719	FC36	CROWFOOT ATTACHMENT 1-1/8 IN.......	
11	PEOZZ	55719	FC38	CROWFOOT ATTACHMENT 1-3/16 IN......	
12	PEOZZ	K5773	FC40	CROWFOOT ATTACHMENT 1-1/4 IN.......	
13	PEOZZ	55719	FC42	CROWFOOT ATTACHMENT 1-5/16 IN......	
14	PEOZZ	55719	FC44	CROWFOOT ATTACHMENT 1-3/8 IN.......	
15	PEOZZ	55719	FC48	CROWFOOT ATTACHMENT 1-1/2 IN.......	
16	PEOZZ	55719	FC52	CROWFOOT ATTACHMENT 1-5/8 IN.......	
17	PEOZZ	55719	FC54	CROWFOOT ATTACHMENT 1-11/16 IN.....	
18	PEOZZ	55719	FC56	CROWFOOT ATTACHMENT 1/3/4 IN.......	
19	PEOZZ	55719	FC60	CROWFOOT ATTACHMENT 1-7/8 IN.......	
20	PEOZZ	55719	FC64	CROWFOOT ATTACHMENT 2 IN...........	
21	PEOZZ	55719	FC68	CROWFOOT ATTACHMENT 2-1/8 IN.......	
22	PEOZZ	55719	FC72	CROWFOOT ATTACHMENT 2-1/4 IN.......	
23	PEOZZ	55719	FC80	CROWFOOT ATTACHMENT 2-1/2 IN.......	
24	PEOZZ	19207	12367674	BOX,ACCESSORIES STO................	

END OF FIGURE

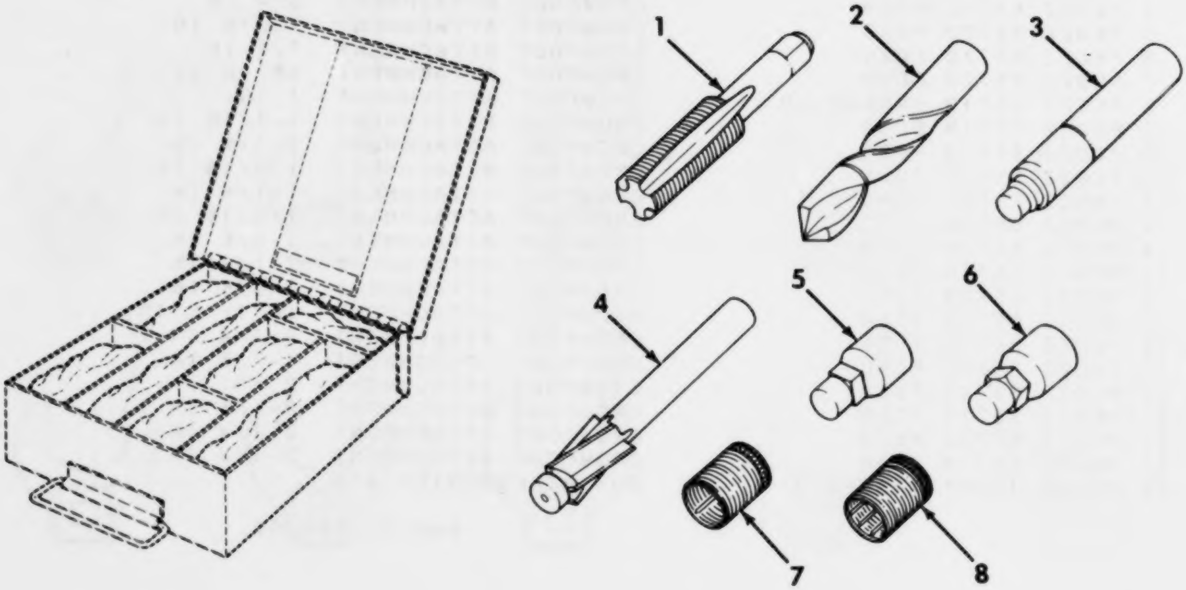

Figure 193. Kit, Thread Insert – P/N, K4-621-621L.

(1) ITEM NO	(2) SMR CODE	(3) CAGEC	(4) PART NUMBER	(5) DESCRIPTION AND USABLE ON CODES(UOC)	(6) QTY
				GROUP AY: SUPPORT EQUIPMENT AND SPECAIL TOOLS	
				FIG.193 KIT, THREAD INSERT- P/N, K4-621-621L	
1	KFFZZ	83324	3/4-16GH3	TAP,THREAD CUTTING..................	
2	PAFZZ	83324	SR62D	DRILL,TWIST.........................	
3	PAFZZ	83324	SR62W4-A	WRENCH,4 POINT......................	
4	PAFZZ	83324	SR62W-A	INSERTER,SCREW THRE.................	
5	PAFZZ	83324	SR62S-A	SWAGE TOOL..........................	
6	PAFZZ	83324	SR621R	EXTRACTOR,SCREW THR.................	
7	PAFZZ	81349	M45932/1-40	INSERT,SCREW THREAD 4 POINT.........	
8	PAFZZ	81349	M45932/1-39L	INSERT,SCREW THREAD 6 POINT.........	

END OF FIGURE

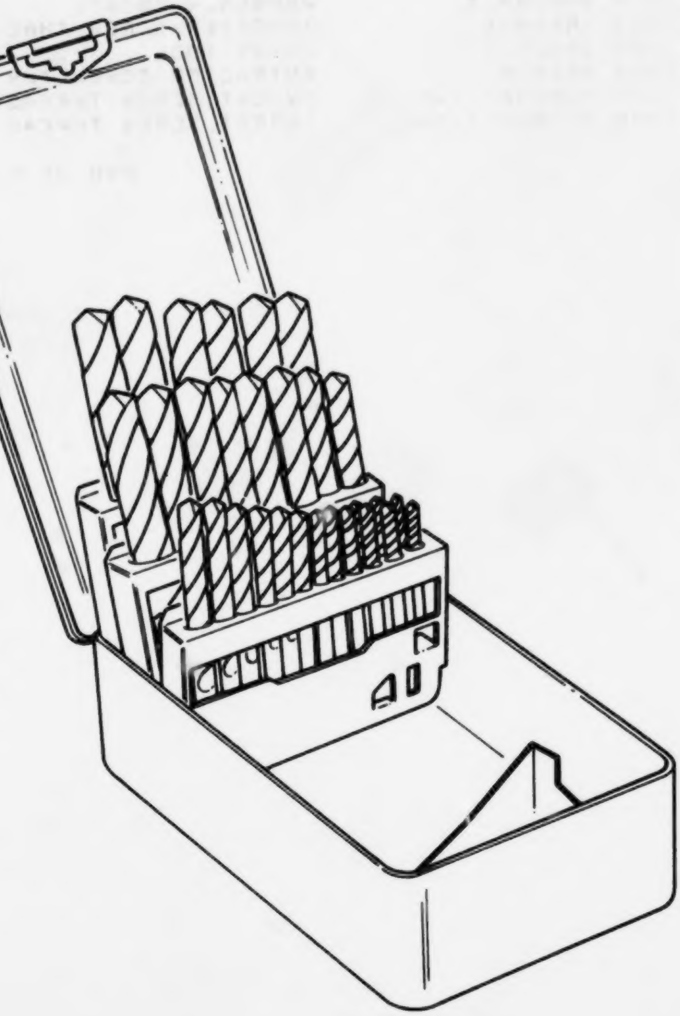

Figure 194. Drill Set, Twist (Cobalt) – P/N, DBC229.

(1) ITEM NO	(2) SMR CODE	(3) CAGEC	(4) PART NUMBER	(5) DESCRIPTION AND USABLE ON CODES(UOC)	(6) QTY
				GROUP AY: SUPPORT EQUIPMENT AND SPECIAL TOOLS	
				FIG.194 DRILL SET, TWIST(COBALT)- P/N, DBC299	
1	PEFZZ	13130	2013 1/16	DRILL,TWIST 1/16 INCH...............	
2	PEFZZ	13130	2013 5/64	DRILL,TWIST 5/64 INCH...............	
3	PEFZZ	13130	2013 3/32	DRILL,TWIST 3/32 INCH...............	
4	PEFZZ	13130	2013 7/64	DRILL,TWIST 7/64 INCH...............	
5	PEFZZ	13130	2013 1/8	DRILL,TWIST 1/8 INCH................	
6	PEFZZ	13130	2013 9/64	DRILL,TWIST 9/64 INCH...............	
7	PEFZZ	13130	2013 5/32	DRILL,TWIST 5/32 INCH...............	
8	PEFZZ	13130	2013 11/64	DRILL,TWIST 11/64 INCH..............	
9	PEFZZ	13130	2013 3/16	DRILL,TWIST 3/16 INCH...............	
10	PEFZZ	13130	2013 13/64	DRILL,TWIST 13/64 INCH..............	
11	PEFZZ	13130	2013 7/32	DRILL,TWIST 7/32 INCH...............	
12	PEFZZ	13130	2013 15/64	DRILL,TWIST 15/64 INCH..............	
13	PEFZZ	13130	2013 1/4	DRILL,TWIST 1/4 INCH................	
14	PEFZZ	13130	2013 17/64	DRILL,TWIST 17/64 INCH..............	
15	PEFZZ	13130	2013 9/32	DRILL,TWIST 9/32 INCH...............	
16	PEFZZ	13130	2013 19/64	DRILL,TWIST 19/64 INCH..............	
17	PEFZZ	13130	2013 5/16	DRILL,TWIST 5/16 INCH...............	
18	PEFZZ	55719	DBC21/64	DRILL,TWIST 21/64 INCH..............	
19	PEFZZ	55719	DBC11/32	DRILL,TWIST 11/32 INCH..............	
20	PEFZZ	13130	04314	DRILL,TWIST 23/64 INCH..............	
21	PEFZZ	13130	2013 3/8	DRILL,TWIST 3/8 INCH................	
22	PEFZZ	13130	2013 25/64	DRILL,TWIST 25/64 INCH..............	
23	PEFZZ	13130	2013 13/32	DRILL,TWIST 13/32 INCH..............	
24	PEFZZ	13130	2013 27/64	DRILL,TWIST 27/64 INCH..............	
25	PEFZZ	13130	2013 7/16	DRILL,TWIST 7/16 INCH...............	
26	PEFZZ	13130	2013 29/64	DRILL,TWIST 29/64 INCH..............	
27	PEFZZ	13130	2013 15/32	DRILL,TWIST 15/32 INCH..............	
28	PEFZZ	55719	DBC31/64	DRILL,TWIST 31/64 INCH..............	
29	PEFZZ	55719	DBC1/2	DRILL,TWIST 1/2 INCH................	
30	PEFZZ	55719	B129A	CASE,TWIST DRILL....................	

END OF FIGURE

(1) ITEM NO	(2) SMR CODE	(3) CAGEC	(4) PART NUMBER	(5) DESCRIPTION AND USABLE ON CODES(UOC)	(6) QTY
				GROUP BB3: SUPPORT EQUIPMENT AND SPECIAL TOOLS	
				FIG.KIT-5 UNIT, DIRECT, AND GENERAL SUPPORT MAINTENANCE SPECIAL TOOL KITS (NOT ILLUSTRATED)	
1	ADHHH	19207	5705425	SPECIAL TOOL KIT,GS GENERAL SUPPORT LEVEL..........................	
				ACCUMULATOR CHARGIN(1) 188-6	
				ADAPTER,SOCKET WREN(2) 188-19	
				ADJUSTING TOOL (1) 188-20	
				BOLT,EYE (1) 188-11	
				BOLT,EYE (2) 188-18	
				BUSHING,PIPE (1) 188-14	
				CHAIN ASSEMBLY,SING(1) 188-21	
				CROWFOOT ATTACHMENT(1) 188-35	
				DRIFTPIN (1) 188-22	
				DRILL SET,TWIST (1) 188-43	
				FIXTURE,TRACK CONNE(2) 188-23	
				INSERTER,SEAL (1) 188-41	
				INSERTER,BEARING AN(1) 188-32	
				INSERTER,BEARING AN(1) 188-29	
				INSERTER,SEAL (1) 188-3	
				INSERTER,BEARING AN(1) 188-1	
				JACK,ROADWHEEL (2) 188-13	
				PAD,REMOVER ROADWHE(1) 188-7	
				PARTS KIT,HYDRAULIC(2) 188-10	
				PIN,STRAIGHT,THREAD(2) 188-39	
				PIN,STRAIGHT,THREAD(3) 188-27	
				PIN,STRAIGHT,KNURLE(6) 188-24	
				PLIERS,RETAINING RI(1) 188-34	
				PLUG,HYDRAULIC TANK(2) 188-4	
				REPLACER (1) 188-2	
				SCREW,CAP,HEXAGON H(3) 188-9	
				SLING,ACTUATOR REMO(1) 188-31	
				SLING,POWERPACK (1) 188-28	
				SOCKET SET,SOCKET W(1) 188-15	
				SOCKET,SQUARE PLUG (1) 188-8	
				SPACER,PLATE (2) 188-25	
				STAND,VEHICLE SUPPO(4) 188-12	
				TESTER,HYDRAULIC HO(1) 188-5	
				TOOL KIT,SCREW THRE(1) 188-33	
				WRENCH (1) 188-42	
				TOOL,LOCKPLATE (1) 188-44	
				WRENCH SET,OPEN END(2) 188-16	
				WRENCH,CAM ADJUSTME(1) 188-30	
				WRENCH,SPANNER (1) 188-36	
				WRENCH,SPANNER (1) 188-37	
				WRENCH,SPANNER (1) 188-40	
				WRENCH,SPANNER (1) 188-38	
				WRENCH,SPANNER (1) 188-26	

(1) ITEM NO	(2) SMR CODE	(3) CAGEC	(4) PART NUMBER	(5) DESCRIPTION AND USABLE ON CODES(UOC)	(6) QTY
				WRENCHSET,CROWFOOT,(2) 188-17	
2	ADFFF	19207	5705426	SPECIAL TOOL,KIT,DS DIRECT SUPPORT LEVEL..............................	
				ACCUMULATOR CHARGIN(1) 188-6	
				ADAPTER,SOCKET WREN(2) 188-19	
				ADJUSTING TOOL (1) 188-20	
				BOLT,EYE (1) 188-11	
				BOLT,EYE (2) 188-18	
				BUSHING,PIPE (1) 188-14	
				CHAIN ASSEMBLY,SING(1) 188-21	
				CROWFOOT ATTACHMENT(1) 188-35	
				DRIFTPIN (1) 188-22	
				DRILL SET,TWIST (1) 188-43	
				FIXTURE,TRACK CONNE(1) 188-23	
				INSERTER,SEAL (1) 188-41	
				INSERTER,BEARING AN(1) 188-32	
				INSERTER,BEARING AN(1) 188-29	
				INSERTER,SEAL (1) 188-3	
				INSERTER,BEARING AN(1) 188-1	
				JACK,ROADWHEEL (2) 188-13	
				PAD,REMOVER ROADWHE(1) 188-7	
				PARTS KIT,HYDRAULIC(2) 188-10	
				PIN,STRAIGHT,THREAD(2) 188-39	
				PIN,STRAIGHT,THREAD(3) 188-27	
				PIN,STRAIGHT,KNURLE(6) 188-24	
				PLIERS,RETAINING RI(1) 188-34	
				PLUG,HYDRAULIC TANK(2) 188-4	
				REPLACER (1) 188-2	
				SCREW,CAP,HEXAGON H(3) 188-9	
				SLING,ACTUATOR REMO(1) 188-31	
				SLING,POWERPACK (1) 188-28	
				SOCKET SET,SOCKET W(1) 188-15	
				SOCKET,SQUARE PLUG (1) 188-8	
				SPACER,PLATE (2) 188-25	
				STAND,VEHICLE SUPPO(4) 188-12	
				TESTER,HYDRAULIC HO(1) 188-5	
				TOOL KIT,SCREW THRE(1) 188-33	
				TOOL,LOCKPLATE (1) 188-44	
				WRENCH (1) 188-42	
				WRENCH SET,OPEN END(2) 188-16	
				WRENCH,CAM ADJUSTME(1) 188-30	
				WRENCH,SPANNER (1) 188-36	
				WRENCH,SPANNER (1) 188-37	
				WRENCH,SPANNER (1) 188-40	
				WRENCH,SPANNER (1) 188-38	
				WRENCH,SPANNER (1) 188-26	
				WRENCHSET,CROWFOOT,(2) 188-17	
3	ADOOO	19207	5705427	SPECIAL TOOL KIT,OR..............................	
				ACCUMULATOR CHARGIN(1) 188-6	
				ADAPTER,SOCKET WREN(2) 188-19	
				BOLT,EYE (2) 188-11	
				BOLT,EYE (2) 188-18	

(1) ITEM NO	(2) SMR CODE	(3) CAGEC	(4) PART NUMBER	(5) DESCRIPTION AND USABLE ON CODES(UOC)	(6) QTY
				BUSHING,PIPE (1) 188-14	
				INSERTER,SEAL (1) 188-3	
				INSERTER,BEARING AN(1) 188-1	
				JACK,ROADWHEEL (2) 188-13	
				PAD,REMOVER ROADWHE(1) 188-7	
				PARTS KIT,HYDRAULIC(2) 188-10	
				PLUG,HYDRAULIC TANK(2) 188-4	
				REPLACER (1) 188-2	
				SCREW,CAP,HEXAGON H(3) 188-9	
				SOCKET SET,SOCKET W(1) 188-15	
				SOCKET,SQUARE PLUG (1) 188-8	
				STAND,VEHICLE SUPPO(4) 188-12	
				TESTER,HYDRAULIC HO(1) 188-5	
				WRENCH SET,OPEN END(2) 188-16	
				WRENCHSET,CROWFOOT,(2) 188-17	

END OF FIGURE

CROSS-REFERENCE INDEXES

NATIONAL STOCK NUMBER INDEX

STOCK NUMBER	FIG.	ITEM
6240-00-001-9405	25	7
5310-00-004-5033	63	65
5310-00-004-5034	63	17
4720-00-004-8249	156	19
5315-00-005-0442	64	14
	161	24
	182	42
	182	66
5305-00-007-6338	120	2
	130	36
4240-00-007-9453	156	11
5315-00-012-4553	136	9
5315-00-013-7214	70	7
5315-00-013-7258	62	9
5310-00-014-5850	8	29
	13	18
	15	15
	165	20
2520-00-015-7139	120	20
5306-00-017-4723	134	1
5306-00-017-6143	188	18
4240-00-018-3079	158	3
4730-00-018-9566	177	12
6240-00-019-0877	45	45
	46	10
4730-00-019-1489	77	41
4730-00-019-2067	119	18
6240-00-019-3093	46	6
	47	22
4730-00-021-1802	108	9
5305-00-022-8292	45	5
5925-00-026-4767	30	2
5340-00-027-1633	134	10
5310-00-027-2342	120	19
2590-00-040-2075	16	13
5315-00-043-1782	175	3
6240-00-044-6914	45	3
	46	7
5310-00-045-3296	8	30
	103	14
	163	21
	165	17
5310-00-045-3299	31	3
	47	7
	158	7
5310-00-045-4007	1	12
5315-00-045-4037	127	61
5310-00-045-5207	15	6
4820-00-045-7415	77	37
	189	27

STOCK NUMBER	FIG.	ITEM
2590-00-045-9901	45	22
2540-00-047-3926	70	1
5330-00-047-4096	43	5
6240-00-047-4097	44	1
5330-00-047-4098	45	11
5330-00-047-4099	45	16
5330-00-047-4101	45	51
5330-00-047-4104	45	2
5330-00-047-4105	45	31
5306-00-050-0347	188	11
5340-00-050-2740	2	42
	11	14
	40	5
	50	3
	119	47
5310-00-050-3520	70	8
4730-00-050-4203	63	67
	70	11
	181	11
4730-00-050-4208	57	23
	58	10
	60	13
	60	19
	61	10
	175	8
5305-00-050-4212	68	1
5310-00-050-9372	73	11
5306-00-051-4077	48	42
5306-00-051-4081	1	45
	63	16
2520-00-051-5327	126	17
5315-00-052-0146	130	17
5305-00-052-2234	57	55
4730-00-052-3420	54	13
5305-00-052-6915	165	21
5305-00-052-6920	159	13
5340-00-053-8994	77	134
5305-00-054-6654	47	40
5305-00-054-9273	180	4
6150-00-055-1751	47	17
5340-00-057-2904	18	27
5340-00-057-2906	139	11
5999-00-057-2929	18	8
	18	10
	21	20
	30	28
	41	9
	42	1
	46	1
	55	29

CROSS-REFERENCE INDEXES

NATIONAL STOCK NUMBER INDEX

STOCK NUMBER	FIG.	ITEM
5999-00-057-2929	120	34
	157	5
5340-00-057-3026	18	22
	34	19
	105	7
5340-00-057-3037	34	18
5340-00-057-3052	48	40
5305-00-058-1082	124	4
5315-00-058-9808	120	26
5315-00-059-0491	63	13
4720-00-060-2732	156	16
5315-00-060-4324	109	35
5310-00-061-1258	45	24
5970-00-063-1495	BULK	22
5970-00-063-1499	BULK	21
5970-00-063-1500	BULK	20
5330-00-064-7796	130	52
2540-00-065-1922	9	2
4730-00-067-7564	78	29
5305-00-068-0500	35	1
5305-00-068-0502	19	6
	30	32
	43	13
	44	13
	63	32
5305-00-068-0505	63	1
5305-00-068-0508	2	33
	163	9
5305-00-068-0510	113	7
	136	18
	137	21
	162	11
	180	7
5305-00-068-0511	51	2
	53	1
	57	17
	58	17
	65	34
	65	37
	68	5
	76	1
	125	7
	162	15
	182	17
5306-00-068-0514	58	2
5305-00-068-0515	165	7
5305-00-068-0543	110	15
5310-00-068-8067	1	42
	112	5
4730-00-069-1184	105	5
5305-00-071-1788	99	20
5305-00-071-1789	144	12
5305-00-071-2055	148	71
5305-00-071-2056	147	17
	148	70
5305-00-071-2057	148	68
5305-00-071-2067	7	1
5305-00-071-2069	7	11
	62	12
	65	8
	99	22
5305-00-071-2070	65	39
	119	7
	134	12
5305-00-071-2071	7	20
	159	11
5305-00-071-2072	65	7
5305-00-071-2074	188	9
5305-00-071-2077	58	9
5305-00-071-2079	60	16
5305-00-071-2237	182	36
5305-00-071-2505	164	11
5305-00-071-2506	13	29
5305-00-071-2509	119	38
5365-00-072-6729	131	8
5365-00-073-5130	144	19
4730-00-074-0713	78	50
	189	25
5975-00-074-2072	13	23
	14	4
5305-00-078-7039	10	18
5340-00-079-7837	21	34
6210-00-079-8943	30	16
5310-00-080-6004	1	13
	7	15
	9	21
	11	12
	16	9
	23	2
	30	19
	51	3
	53	2
	54	24
	57	59
	60	23
	63	38
	64	11
	65	19
	66	2
	67	2

CROSS-REFERENCE INDEXES

NATIONAL STOCK NUMBER INDEX

STOCK NUMBER	FIG.	ITEM	STOCK NUMBER	FIG.	ITEM
5310-00-080-6004	71	15	5310-00-081-4219	178	6
	72	6	5315-00-081-7041	109	26
	76	17	5315-00-081-7875	76	75
	77	58	5315-00-081-7876	182	40
	77	65	4730-00-082-0856	123	22
	79	2	2590-00-083-0266	15	19
	80	2	5310-00-087-4652	16	3
	82	19		65	32
	83	19		66	3
	84	20		91	1
	87	5		162	10
	91	2		164	5
	93	7	6220-00-087-9667	47	29
	96	6	5340-00-087-9668	47	28
	101	1	5310-00-088-0553	48	37
	104	7	5310-00-088-1251	107	25
	109	5	5340-00-088-1255	156	24
	119	2	5305-00-088-8332	110	6
	136	16	4730-00-089-2515	130	13
	137	23	4730-00-089-3406	121	9
	138	3		122	49
	152	37	5330-00-090-2128	6	8
	156	4	5365-00-090-5426	18	1
	161	34		20	2
	162	2	5365-00-090-9164	143	14
	164	4	4730-00-096-8331	114	18
	175	6	3110-00-097-6353	110	9
	176	3	3110-00-100-2368	85	16
	181	7	3110-00-100-5499	147	26
4730-00-080-7040	2	9	3110-00-100-5937	175	1
	48	21	3110-00-100-5989	116	28
	107	27	3110-00-100-6151	127	26
5340-00-080-9853	156	22		131	19
5310-00-081-4219	1	51		132	19
	4	3		133	19
	5	4	3110-00-100-6153	120	22
	8	3	3110-00-100-6155	86	20
	48	36	3110-00-100-7349	127	46
	63	19	3110-00-102-0613	147	8
	76	24	5305-00-103-3041	135	2
	77	88	5305-00-103-9814	128	7
	104	3	5306-00-104-2845	127	19
	105	16	4730-00-105-2684	130	14
	108	4	8315-00-106-5973	BULK	8
	119	4	6250-00-112-0475	47	13
	137	1	5940-00-113-3137	14	8
	142	2	5940-00-113-3138	34	25
	146	9	5940-00-113-3145	34	26
	161	19	5940-00-113-3148	34	9
	165	24	5940-00-113-9826	12	2

CROSS-REFERENCE INDEXES

NATIONAL STOCK NUMBER INDEX

STOCK NUMBER	FIG.	ITEM
5940-00-114-1315	34	7
5320-00-115-1544	45	7
5935-00-115-2307	39	6
5305-00-115-9526	8	25
	23	4
	27	2
	30	21
	45	25
	54	22
	56	3
	58	26
	105	9
	182	26
4730-00-118-8546	77	123
5930-00-130-5349	24	5
5310-00-132-1438	47	21
5935-00-132-2677	22	2
3110-00-132-6967	127	11
	134	6
5930-00-133-9629	24	13
	30	13
3040-00-133-9967	1	36
	136	4
	137	12
5310-00-134-4169	101	4
3110-00-135-7205	146	11
5315-00-140-1938	8	7
5310-00-141-1795	64	2
5330-00-141-6552	103	9
4730-00-143-3941	77	117
	78	71
5365-00-144-6445	134	8
	134	16
5330-00-145-1509	135	4
5310-00-145-1650	173	11
5305-00-145-8367	30	11
	159	15
4210-00-146-2963	48	20
9390-00-146-9334	BULK	28
5305-00-149-8618	30	5
5340-00-150-1658	156	9
4910-00-150-5805	188	20
5310-00-151-5572	79	7
2910-00-152-2033	KIT	
6145-00-152-6499	BULK	36
5305-00-153-8694	85	6
5305-00-155-5075	74	23
	183	12
3110-00-155-6560	127	7
3110-00-155-6565	127	4
3110-00-155-7760	127	58
3110-00-155-7770	127	59
6240-00-155-7836	30	15
6240-00-155-8707	28	11
	28	13
5180-00-157-1105	188	33
5120-00-157-2133	188	36
6145-00-161-1609	BULK	35
4730-00-163-0236	108	10
4730-00-163-0237	77	128
4720-00-165-4776	9	8
5305-00-165-8074	57	49
5310-00-167-0721	78	11
5310-00-167-0770	91	14
5310-00-167-0818	110	17
5310-00-167-1303	91	19
5330-00-167-9773	45	23
6250-00-169-4162	47	8
4730-00-172-0010	149	6
4730-00-172-0034	177	10
5330-00-173-4770	47	16
5325-00-174-9325	159	21
5365-00-175-1315	127	8
5305-00-175-3230	82	4
	111	6
5340-00-177-3711	103	28
5340-00-177-3957	8	19
4730-00-177-6166	36	2
6220-00-179-4324	46	9
6220-00-179-4834	45	21
6695-00-179-4945	45	30
6220-00-179-4946	45	15
2520-00-179-7036	144	13
6220-00-179-8976	45	29
5310-00-180-0277	125	6
	128	6
	129	3
3110-00-180-7117	184	7
9390-00-180-7289	BULK	29
9905-00-182-5041	44	14
3110-00-183-6730	74	14
	74	20
3110-00-183-9901	130	6
5120-00-184-8397	192	1
5120-00-184-8398	192	2
5120-00-184-8400	192	4
5120-00-184-8401	192	5
5120-00-184-8403	192	7
5120-00-184-8405	192	9
5120-00-184-8407	192	11

CROSS-REFERENCE INDEXES

NATIONAL STOCK NUMBER INDEX

STOCK NUMBER	FIG.	ITEM
5120-00-184-8409	192	13
5120-00-184-8410	192	14
5120-00-184-8412	192	15
5120-00-184-8414	192	16
5120-00-184-8415	192	17
5120-00-184-8416	192	18
5120-00-184-8418	192	19
5120-00-184-8420	192	20
5120-00-184-8422	192	21
5120-00-184-8424	192	22
5120-00-184-8428	192	23
5310-00-184-8974	66	47
	77	33
	105	8
	107	16
	108	17
	122	4
5310-00-184-8992	62	11
	63	51
	91	15
	122	31
	152	30
4730-00-186-3027	2	27
4730-00-186-3845	50	17
	78	88
5315-00-187-9591	69	4
	70	3
4730-00-188-3504	146	29
4730-00-188-3505	148	66
4730-00-188-3506	148	65
4730-00-188-3507	146	4
5305-00-191-3641	50	2
4730-00-193-2709	2	37
5310-00-193-7577	32	5
4730-00-196-1467	119	15
4730-00-196-1468	122	37
4730-00-196-1483	50	21
4730-00-196-1490	54	16
4730-00-196-1504	2	31
5365-00-200-8772	127	35
5935-00-201-6673	160	13
6220-00-202-8591	45	10
5365-00-202-8946	83	5
4730-00-203-0920	36	8
4730-00-203-3831	189	15
5120-00-203-4792	191	9
5120-00-203-4799	191	8
5120-00-203-4804	191	7
5120-00-203-4806	191	6
5120-00-203-4807	191	5
5120-00-203-4808	191	4
5120-00-203-4809	191	3
5120-00-203-4810	191	2
5120-00-203-4811	191	1
5310-00-205-8249	110	2
5305-00-206-2508	15	4
5307-00-206-4044	73	8
5310-00-209-0786	20	9
	30	31
5310-00-209-0788	13	16
	30	9
	43	11
	45	6
	47	32
5310-00-209-0965	93	11
	99	19
	127	18
	134	2
	144	11
	147	16
	148	67
5310-00-211-9271	136	7
2540-00-212-9068	9	12
5935-00-214-0904	18	7
4730-00-214-8108	119	23
5365-00-215-5541	74	6
5365-00-215-5605	74	7
4730-00-221-2141	150	1
3020-00-221-8777	74	17
1650-00-222-4525	81	12
	173	9
4730-00-225-0699	77	43
5305-00-225-3841	20	7
5305-00-225-3843	15	8
	23	7
	28	20
	50	19
	77	73
	107	4
5310-00-225-6408	44	7
5310-00-225-6993	65	5
	159	2
5340-00-225-8313	40	4
5310-00-225-8327	110	1
5306-00-225-8498	1	50
	119	6
5306-00-225-8499	109	24
	146	10
	161	17
5945-00-225-8692	30	10

CROSS-REFERENCE INDEXES

NATIONAL STOCK NUMBER INDEX

STOCK NUMBER	FIG.	ITEM
5306-00-225-9086	148	34
5306-00-225-9088	137	19
	138	22
	161	4
	178	5
5306-00-225-9089	137	8
5306-00-225-9093	1	8
5306-00-225-9095	138	16
5306-00-226-4825	154	2
5306-00-226-4827	109	32
	142	7
5306-00-226-4828	3	2
	5	2
5306-00-226-4830	182	12
5306-00-226-4831	76	30
5306-00-226-4832	76	23
5306-00-226-4834	8	31
5306-00-226-4838	4	5
5306-00-226-4841	15	17
5930-00-226-6429	24	12
4730-00-226-6902	78	47
4730-00-226-8874	36	9
	119	44
3110-00-227-2559	175	12
3110-00-227-3240	135	5
3110-00-227-3245	86	10
3110-00-227-4682	152	23
3110-00-227-4788	182	45
2590-00-229-5696	182	54
4730-00-231-3018	108	8
	122	36
4730-00-231-5623	54	17
5315-00-234-1863	63	46
5120-00-236-2261	192	3
4730-00-239-2503	105	4
5120-00-240-8702	188	19
5310-00-241-6640	109	17
4730-00-242-3147	78	67
5310-00-245-3421	161	16
5310-00-245-3424	5	5
	8	4
	76	28
	161	20
5310-00-247-3360	23	5
	28	18
9505-00-248-9842	BULK	42
5360-00-250-5622	130	44
5330-00-251-8839	50	13
	77	14
	167	6

STOCK NUMBER	FIG.	ITEM
5330-00-251-8839	170	11
	171	3
5330-00-251-9395	118	10
5365-00-252-4746	135	6
5330-00-252-8888	167	8
4730-00-253-4412	2	48
5305-00-253-5604	110	20
5305-00-253-5609	73	17
5305-00-253-5614	76	7
5305-00-253-5615	6	6
	26	5
	143	29
	146	5
5305-00-253-5626	70	15
5310-00-255-0014	131	15
4730-00-255-0560	122	45
5310-00-255-4371	9	13
5365-00-260-4875	127	5
	134	5
5365-00-260-4883	116	9
5310-00-261-7340	96	9
5310-00-261-8278	15	5
5310-00-262-2986	94	12
5365-00-262-4701	123	18
6240-00-266-9940	25	2
	25	9
	25	13
	28	7
5305-00-267-8956	63	53
5305-00-269-3217	66	6
5305-00-269-3218	137	14
5305-00-269-3225	176	2
5305-00-269-3238	181	6
5305-00-269-3239	109	28
5305-00-269-3246	63	66
	83	17
5310-00-269-4040	57	24
	163	16
5310-00-269-6717	78	4
	88	9
2530-00-270-3878	6	7
4730-00-273-6686	2	17
	54	4
4730-00-273-6714	175	14
4730-00-274-4601	78	8
3110-00-274-4958	182	61
5325-00-276-6098	159	17
5140-00-277-8835	194	30
4730-00-278-3144	122	38
4730-00-278-4311	50	23

CROSS-REFERENCE INDEXES

NATIONAL STOCK NUMBER INDEX

STOCK NUMBER	FIG.	ITEM	STOCK NUMBER	FIG.	ITEM
5365-00-282-1831	127	3	6250-00-337-7465	47	6
	132	14	5325-00-338-1274	160	12
	133	14	4730-00-350-4437	48	12
5365-00-282-7017	148	41	5325-00-353-0948	45	47
5330-00-285-9842	2	20	5330-00-355-2099	149	8
	50	8	4730-00-355-2100	149	9
	54	8	5310-00-367-1799	73	4
	77	29	6240-00-368-4972	45	17
	78	14	4240-00-368-6291	158	5
	88	23	4730-00-375-6403	77	107
	169	5		78	66
	170	2	4730-00-375-6405	122	23
5330-00-285-9847	77	85		150	3
4730-00-289-0382	2	50	5310-00-393-6685	18	3
4730-00-289-0383	2	6		20	1
	9	10	5935-00-399-6673	21	15
	48	16		43	17
	119	10		157	11
4820-00-289-3378	50	33	5940-00-399-6676	12	17
4730-00-289-5176	2	49		18	11
	182	14		21	1
4730-00-289-5484	119	22		24	22
3110-00-289-6748	152	6		30	25
4240-00-289-7978	158	4		34	21
5330-00-292-0570	143	46		42	9
	152	43		43	18
5120-00-293-2567	192	12		157	6
9505-00-293-4208	BULK	43		160	8
6240-00-295-2668	47	5	2520-00-400-6454	135	12
5930-00-296-6318	24	1	5307-00-401-0883	125	14
5315-00-297-1745	143	45	5365-00-401-2065	130	26
5330-00-297-6329	25	3	5340-00-401-2070	130	48
	25	10	5355-00-401-5294	181	3
	25	14	6140-00-404-2669	16	2
	28	8	5310-00-407-9566	3	3
5310-00-297-8901	91	4		4	2
5330-00-297-9990	122	46		15	18
5310-00-298-8903	21	2		63	20
	24	21		119	5
6210-00-299-5564	25	15		120	3
2920-00-304-3493	92	1		127	54
5930-00-307-8856	24	2		142	8
5940-00-314-0479	18	20		143	2
	39	4		154	3
4730-00-322-8457	48	28		182	11
5925-00-333-1584	30	7	5310-00-413-3040	89	11
5935-00-333-9414	160	11	9390-00-414-7139	BULK	30
2930-00-337-0027	113	3	4820-00-420-5499	50	22
6210-00-337-7345	28	9	3040-00-421-1325	134	19
6220-00-337-7463	44	11	4820-00-424-7431	83	4

CROSS-REFERENCE INDEXES

NATIONAL STOCK NUMBER INDEX

STOCK NUMBER	FIG.	ITEM	STOCK NUMBER	FIG.	ITEM
4730-00-431-9307	77	98	5310-00-483-8790	67	4
5305-00-432-4202	139	12		136	19
5340-00-435-6124	132	16		137	13
	133	16		176	4
5340-00-435-9372	8	15	5310-00-483-8791	1	5
5340-00-439-8139	134	17		161	5
4730-00-441-2263	2	1	5310-00-483-8792	20	10
	48	3		54	20
5330-00-441-3105	85	3		77	77
4730-00-441-8700	107	20		82	20
	189	1	5310-00-484-1718	94	2
5935-00-443-5076	43	2	5999-00-485-8954	43	3
2520-00-446-2484	148	1	4730-00-491-9576	77	21
5305-00-446-9901	10	19		78	38
	18	26	5365-00-492-6068	185	2
	76	2		186	2
	103	27	4730-00-495-3409	77	42
	156	10	5310-00-495-7376	74	12
5310-00-449-2381	93	2	2520-00-498-3815	148	69
5315-00-451-0089	130	31	4730-00-499-9837	130	11
5975-00-451-5001	77	27	5330-00-505-2419	85	9
4730-00-451-7958	88	8	5305-00-509-8106	94	13
5306-00-455-0468	55	18	4820-00-513-5471	189	28
5365-00-455-2750	131	16	5365-00-514-0393	156	12
2520-00-455-5634	127	31	5315-00-514-2660	113	4
3120-00-455-7053	131	20	5330-00-514-3289	141	7
2520-00-460-6430	130	50		143	13
2520-00-460-6433	130	46	5310-00-514-6674	130	35
2520-00-460-6440	130	45	5120-00-516-4979	190	1
5330-00-462-0907	46	8	5120-00-517-7021	192	10
2910-00-462-4877	83	10	5935-00-517-8519	39	1
4730-00-466-7467	77	122	5310-00-518-5680	161	1
5315-00-468-1635	76	31	5310-00-519-6630	136	14
2520-00-470-6272	130	5	5306-00-519-6666	6	4
5330-00-472-2783	167	9	5310-00-521-8595	96	5
	173	1	5365-00-530-7968	182	19
2590-00-473-6331	7	16	4820-00-535-6483	81	13
9905-00-473-7260	102	4		173	10
5330-00-477-0338	103	20	6145-00-538-8222	BULK	38
4930-00-477-8276	53	3	4730-00-540-1197	77	91
5315-00-478-0256	151	10	4730-00-540-1525	189	8
	151	20	5120-00-541-4071	192	6
5340-00-479-2947	163	6	4730-00-542-5911	50	26
5310-00-483-8790	27	3		189	5
	51	7	5310-00-543-2410	41	2
	61	20	5305-00-543-2419	7	13
	77	32	5340-00-543-3155	163	4
	80	1	5305-00-543-4372	163	3
	83	16	5310-00-543-4863	110	14
	83	18	5310-00-543-5060	58	22

CROSS-REFERENCE INDEXES

NATIONAL STOCK NUMBER INDEX

STOCK NUMBER	FIG.	ITEM
5330-00-543-7085	170	7
5330-00-543-7090	170	21
6210-00-548-0504	25	4
	25	11
5930-00-548-8046	24	15
5940-00-549-6581	17	3
5940-00-549-6583	17	1
5365-00-549-6688	77	132
5310-00-550-1130	44	12
5340-00-550-8070	64	17
2940-00-552-3842	106	3
3110-00-554-2733	186	7
3110-00-554-2972	148	40
3110-00-554-2985	148	9
3110-00-554-5304	125	9
4730-00-555-1764	2	26
	50	1
	119	34
9505-00-555-8648	BULK	41
3110-00-556-8162	127	43
6220-00-557-8228	45	48
6220-00-557-8229	45	12
5365-00-558-8482	130	27
	130	47
5310-00-559-0070	30	3
	45	14
9330-00-563-4527	BULK	31
4240-00-565-6059	156	15
5935-00-565-9503	30	29
6145-00-567-3255	BULK	2
5935-00-570-5859	45	19
5935-00-572-9180	18	6
	21	22
	30	26
	41	11
	42	3
	46	3
	55	27
	120	32
	157	3
4730-00-574-6579	77	96
6210-00-578-7970	157	13
5310-00-579-0079	35	5
	45	37
5330-00-579-3163	145	5
5330-00-579-6860	182	31
5330-00-579-7916	170	29
5330-00-579-7925	77	60
	122	54
5330-00-579-7927	84	12
5330-00-579-7927	121	10
	122	47
5330-00-579-8108	143	40
3110-00-580-5589	182	20
5330-00-582-2113	170	12
5330-00-582-2855	120	24
	130	30
	169	20
	172	24
5325-00-582-3601	55	31
5310-00-582-5965	13	28
	15	7
	19	5
	35	2
	50	20
	63	2
	65	3
	111	7
	119	39
	164	10
	182	35
5330-00-584-0265	170	20
5310-00-584-5272	7	2
	62	10
	99	21
	136	20
	137	16
	180	2
5310-00-584-7889	57	34
	180	10
4010-00-585-2108	BULK	3
4730-00-585-2309	77	118
5310-00-585-3243	61	18
	151	16
4730-00-595-0083	6	9
4730-00-595-1884	143	10
4820-00-595-2761	2	54
5340-00-595-5208	156	13
4940-00-595-5720	188	5
5310-00-595-7044	24	18
5310-00-595-7237	128	9
5310-00-595-7421	57	6
	58	5
	60	21
	84	26
	119	9
5120-00-595-8213	192	8
5120-00-596-1199	190	8
5310-00-596-7691	13	21
	21	33

CROSS-REFERENCE INDEXES

NATIONAL STOCK NUMBER INDEX

STOCK NUMBER	FIG.	ITEM
5310-00-596-7691	28	3
	35	8
	37	6
	40	6
	159	19
5310-00-596-7693	1	18
	13	26
	24	24
	28	22
	45	42
	137	28
	138	8
5120-00-596-8508	190	6
5120-00-596-8511	190	5
5315-00-597-7399	70	13
5330-00-599-1629	118	7
5330-00-599-2934	170	19
	182	33
1005-00-600-5294	19	3
5330-00-604-8094	123	16
5120-00-605-3926	188	23
5310-00-608-1053	118	6
5340-00-608-9214	123	11
5310-00-614-3505	93	3
5310-00-616-3554	13	8
5315-00-616-5499	8	22
5315-00-616-5514	1	23
	137	31
	138	10
5315-00-616-5520	136	13
5315-00-616-5522	138	17
5315-00-616-5524	74	10
5315-00-616-5526	63	9
	93	4
5330-00-618-0799	81	6
5330-00-618-5361	81	10
4730-00-618-5372	48	1
	77	108
4730-00-618-8126	54	5
	77	93
5935-00-622-2831	18	18
	21	18
5935-00-622-4948	47	18
5325-00-623-0928	47	23
4730-00-623-3889	50	29
	77	28
	78	44
4730-00-625-2212	189	9
5330-00-627-5485	81	7
5310-00-627-6128	27	1
5310-00-627-6128	44	9
	51	9
	119	17
5330-00-629-6340	123	17
5330-00-630-5958	170	18
5305-00-632-2777	81	4
5305-00-633-0785	47	4
6210-00-635-5686	25	8
5310-00-637-9541	7	14
	8	24
	23	3
	30	20
	54	23
	57	16
	71	16
	77	64
	81	3
	98	4
	104	8
	113	9
	136	17
	137	22
	138	2
	141	3
	163	2
	164	7
	180	8
	182	3
	182	24
	187	4
4310-00-640-3774	77	2
	114	2
	139	1
5330-00-641-4336	13	9
6240-00-643-0687	44	3
2910-00-646-9727	105	1
4730-00-647-3207	2	8
	9	7
	119	31
5340-00-647-3933	43	12
5930-00-655-4248	24	25
5310-00-656-0067	40	11
5310-00-660-3381	1	10
	137	18
	138	19
5975-00-660-5962	34	27
5365-00-663-1245	148	7
5365-00-664-5386	60	17
5310-00-671-4109	134	13
5365-00-674-6831	77	131

CROSS-REFERENCE INDEXES

NATIONAL STOCK NUMBER INDEX

STOCK NUMBER	FIG.	ITEM
5365-00-674-6831	78	48
	120	28
4730-00-676-3075	48	35
	189	24
5340-00-678-6574	57	19
	58	25
4730-00-679-9766	77	102
	78	61
5310-00-682-5444	110	13
5930-00-683-1627	13	3
5120-00-683-8597	190	4
5120-00-683-8602	190	7
5310-00-684-2731	81	16
3120-00-684-5725	60	12
	60	18
	61	9
	177	11
5935-00-686-2599	18	2
5355-00-687-2917	19	1
5305-00-688-2111	98	5
5935-00-691-5591	40	12
2520-00-692-9242	148	57
5315-00-695-6223	43	8
2590-00-695-9076	21	3
	24	20
5935-00-695-9077	24	17
6220-00-699-8103	45	39
6220-00-699-8104	45	33
6220-00-699-8105	45	4
6145-00-699-8963	BULK	34
5930-00-699-9438	24	3
6210-00-699-9457	25	12
6210-00-699-9458	28	6
5305-00-701-6980	57	25
5340-00-702-2848	107	26
3110-00-702-3088	127	33
5330-00-702-3413	183	4
6145-00-705-6678	BULK	37
6145-00-705-6684	BULK	1
5940-00-705-6702	34	16
5940-00-705-6706	21	9
	34	17
5940-00-705-6707	21	10
5940-00-705-6708	18	17
	34	10
5940-00-705-6709	20	8
	40	13
5940-00-705-6715	160	1
5930-00-705-7187	47	38
5360-00-705-7189	47	37

STOCK NUMBER	FIG.	ITEM
5330-00-706-3188	130	33
4730-00-706-8711	48	4
	189	23
5120-00-708-3639	188	22
5305-00-709-8531	93	10
5305-00-710-4205	161	21
4730-00-710-5571	77	141
5305-00-719-5235	180	1
4730-00-720-2038	49	3
4010-00-720-4467	BULK	4
5310-00-721-8000	48	10
5305-00-724-5813	184	9
	185	8
	186	9
5305-00-724-5832	169	35
	172	20
5305-00-724-7209	169	7
5305-00-724-7223	8	23
5305-00-724-7236	109	23
5305-00-724-7254	163	14
5305-00-725-2317	80	18
	83	20
	87	7
	129	6
	141	13
5340-00-725-5280	11	11
	34	28
	150	12
5305-00-726-2555	63	60
5305-00-727-2283	63	18
	178	4
4730-00-727-7485	189	6
4730-00-729-4930	189	4
5315-00-729-6987	182	16
5315-00-730-4453	76	56
5930-00-730-6623	30	18
2520-00-730-6665	148	35
2520-00-730-6669	148	2
5340-00-731-9611	21	14
5310-00-732-0558	63	36
	77	55
	104	19
	107	14
	108	18
	113	13
	122	3
	123	1
	180	5
	182	5
5310-00-732-0559	109	4

CROSS-REFERENCE INDEXES

NATIONAL STOCK NUMBER INDEX

STOCK NUMBER	FIG.	ITEM	STOCK NUMBER	FIG.	ITEM
5340-00-732-0642	47	1	5310-00-763-8922	57	39
5930-00-732-0651	47	30		59	4
5310-00-732-0652	47	35	3120-00-763-8930	164	3
5310-00-732-0654	47	33	5340-00-764-2334	163	20
5330-00-732-0655	47	34	5305-00-764-4479	11	15
5355-00-732-0656	47	39		12	4
5305-00-732-0657	47	36		18	23
5330-00-732-1312	143	17		21	11
9905-00-733-7622	102	3		40	3
5315-00-733-8093	148	3	5340-00-764-7051	18	28
2530-00-734-5295	148	22		21	32
2590-00-735-4063	19	4	4310-00-765-6039	131	24
2520-00-735-4244	148	33	5935-00-767-7936	21	35
2520-00-735-4245	148	56	5310-00-768-0318	91	13
5330-00-735-4264	144	9		122	30
2520-00-735-4268	148	6	5310-00-768-0319	111	8
2520-00-735-9079	148	37	5330-00-770-8123	141	4
2520-00-735-9097	148	43	5310-00-771-4911	69	5
5330-00-736-0281	144	15		70	2
5330-00-736-3508	123	7	5975-00-771-6634	18	4
2520-00-736-3578	148	44	5935-00-771-8192	43	7
2520-00-736-3581	144	16	5365-00-772-2322	43	4
5305-00-737-5694	47	2	6350-00-772-7664	30	33
5365-00-737-6357	141	8	6220-00-772-9788	45	32
5340-00-739-7787	122	9	5360-00-772-9800	45	9
5310-00-741-2834	45	8	5935-00-773-1428	20	6
5306-00-741-7519	129	4	5305-00-775-9492	135	8
6210-00-745-7649	25	1	5305-00-782-9489	77	36
5330-00-745-7814	72	4		77	63
2590-00-745-7892	24	10		136	29
9905-00-752-4649	24	16	5325-00-783-4754	11	17
	55	26	4730-00-786-2247	48	45
	157	9		77	142
	160	3	5365-00-787-2192	116	6
2910-00-752-9138	51	16	2940-00-787-7141	118	4
5945-00-754-9484	35	6	4730-00-788-5959	123	23
4730-00-755-7609	77	59	4140-00-792-8395	55	5
	122	53	6220-00-796-2241	47	3
5305-00-757-8122	2	43	5330-00-796-2242	47	26
	35	9	6220-00-796-2244	47	27
5340-00-758-0181	91	12	5330-00-796-2254	47	14
4730-00-761-8538	54	18	4210-00-796-8260	48	13
4730-00-762-1239	48	34	5310-00-797-2040	45	28
	77	143	4730-00-797-6566	48	44
5310-00-763-0038	6	3	2910-00-798-4056	51	1
4240-00-763-2465	158	2	4310-00-799-9844	131	13
5310-00-763-8905	44	4		132	13
5310-00-763-8912	140	10		133	13
5310-00-763-8920	8	21	5310-00-800-0695	44	6
	140	6	5940-00-800-7470	34	4

CROSS-REFERENCE INDEXES

NATIONAL STOCK NUMBER INDEX

STOCK NUMBER	FIG.	ITEM
5940-00-800-7470	160	10
4730-00-800-7570	189	2
5330-00-801-3440	170	28
5305-00-802-2764	51	10
5925-00-803-4424	30	6
4730-00-803-5765	2	14
	180	12
4730-00-803-5776	2	4
	122	14
5330-00-803-7208	170	34
5365-00-803-7301	161	26
5365-00-803-7303	1	29
	109	12
5365-00-803-7304	135	11
5365-00-803-7315	143	39
5365-00-803-9971	135	13
5330-00-804-5694	77	82
	121	4
	122	15
	139	9
5330-00-804-5695	77	20
	78	37
	119	27
	168	2
	170	36
	171	6
5305-00-804-6318	102	1
5365-00-804-9739	182	62
5340-00-805-0339	91	30
5365-00-805-1403	80	14
5330-00-805-2966	77	109
	80	13
	167	2
	170	8
5935-00-805-4991	38	1
4730-00-805-5094	189	21
5310-00-805-6758	65	38
5340-00-806-0022	158	6
5935-00-807-4109	156	6
4540-00-807-6856	157	1
5330-00-807-8993	116	16
	128	14
5330-00-808-0794	2	10
	20	16
	48	19
	50	18
	77	22
	78	1
	84	4
	88	3
5330-00-808-0794	107	28
	122	58
	167	3
	168	4
	170	26
	171	1
3120-00-808-2171	57	22
4730-00-808-5089	156	18
5340-00-809-1490	48	6
5340-00-809-1492	38	4
	39	3
	48	18
	159	14
5340-00-809-1494	77	76
5365-00-809-1518	127	38
5310-00-809-4058	2	34
	16	11
	20	18
	23	6
	28	19
	32	2
	43	14
	48	8
	58	3
	63	48
	65	2
	71	3
	77	72
	78	6
	82	2
	82	2
	84	23
	107	5
	119	40
	156	2
	161	6
	163	10
	164	9
	165	6
	182	39
5310-00-809-4061	16	4
	58	16
	78	35
	118	2
	123	2
5310-00-809-4085	8	11
	91	10
	93	6
	99	18
	103	5

CROSS-REFERENCE INDEXES

NATIONAL STOCK NUMBER INDEX

STOCK NUMBER	FIG.	ITEM	STOCK NUMBER	FIG.	ITEM
5310-00-809-4085	106	2	4730-00-812-7999	2	28
	114	16		50	31
	115	2		77	19
	116	13		107	1
	151	2		114	1
	161	15		139	4
5310-00-809-5998	7	3	5930-00-812-8888	20	21
	16	15	4730-00-813-9611	2	46
	57	48	5315-00-814-3531	45	44
	58	6	6685-00-814-5271	31	5
	60	15	5315-00-815-1405	63	39
	62	2	5315-00-815-8840	1	33
	63	12		76	44
	64	16		138	11
	65	6	5330-00-816-3546	77	18
	66	39		84	17
	68	12		121	16
	79	6	5330-00-818-4591	84	7
	80	15	5306-00-818-5330	91	31
	84	27	5330-00-819-5111	77	46
	85	15		78	24
	87	2	5315-00-819-6282	63	33
	91	5	5970-00-819-9569	BULK	25
	109	1	5310-00-820-6653	109	16
	112	4	5305-00-821-3869	1	26
	117	19	3110-00-822-3822	148	20
	119	8	4730-00-822-5609	48	39
	136	26		77	38
	159	3		78	2
	161	25		88	4
	164	2		122	59
	165	3	5930-00-823-0482	19	2
	180	3	5935-00-823-5322	22	1
5310-00-809-8533	1	31	5310-00-823-8803	44	5
	57	38		72	3
	59	3		76	53
	91	26		140	2
	124	1		178	3
5310-00-809-8540	140	15		178	15
5310-00-809-8541	9	23	5310-00-823-8804	9	18
	57	12		54	19
	66	19		120	7
5310-00-809-8546	51	17	5305-00-823-9139	75	4
5310-00-811-1377	57	14	5315-00-825-8350	63	44
	66	22	4730-00-827-5852	108	26
5315-00-811-9106	48	30	5340-00-833-3049	34	14
5315-00-811-9107	63	49		77	135
4730-00-812-2434	77	80	5310-00-833-3340	135	9
	88	1	5330-00-833-7491	77	95
5970-00-812-2967	BULK	26		81	15

CROSS-REFERENCE INDEXES

NATIONAL STOCK NUMBER INDEX

STOCK NUMBER	FIG.	ITEM
5935-00-833-8561	12	19
	18	13
	21	5
	30	23
	34	23
	42	7
	157	8
	160	6
5970-00-833-8562	12	18
	18	12
	21	6
	30	24
	34	22
	42	8
	43	19
	157	7
	160	7
5310-00-833-8567	18	9
	21	21
	30	27
	41	10
	42	2
	46	2
	55	28
	120	33
	157	4
4730-00-833-9315	122	1
4730-00-834-1139	103	4
5305-00-834-1810	15	3
4730-00-834-4519	78	20
5310-00-834-8734	1	37
	8	18
	64	21
	136	5
	137	11
5315-00-835-1240	182	22
4730-00-835-3003	122	18
5330-00-835-7485	170	38
5315-00-836-9628	109	18
2520-00-837-1585	144	17
5133-00-837-7595	194	1
5365-00-838-8715	127	6
	134	4
5360-00-839-1626	143	47
5315-00-839-2325	48	32
	76	74
	120	6
	165	26
	182	38
5315-00-839-2326	1	32
5315-00-839-2326	138	15
3120-00-839-2331	143	38
5315-00-839-5822	8	6
	178	14
5306-00-839-9088	145	25
5310-00-839-9269	165	25
4730-00-840-7236	121	8
2520-00-840-9434	142	19
3120-00-840-9446	142	21
	143	43
5310-00-841-0273	148	11
5310-00-841-2041	63	14
5360-00-841-6980	143	16
5360-00-841-8409	148	59
5310-00-842-1488	182	64
5315-00-842-3044	76	45
	84	24
	109	11
5365-00-842-7853	144	7
5365-00-842-7854	148	45
5360-00-843-0141	148	47
5365-00-844-2913	148	12
4730-00-844-3308	2	25
5315-00-844-3662	169	25
5315-00-844-3664	181	17
5310-00-844-5652	144	20
5315-00-844-6796	145	17
	145	29
5360-00-845-1520	148	5
5330-00-845-1521	141	6
5935-00-846-3884	20	5
5305-00-846-5703	61	16
5306-00-847-4964	148	23
5330-00-848-9944	144	2
3110-00-849-8941	144	8
3110-00-849-8942	144	5
5310-00-851-2677	109	25
5310-00-851-2682	1	27
	137	4
3120-00-851-9179	182	63
5305-00-852-1012	9	15
	10	11
4820-00-853-6864	77	138
5310-00-853-9335	76	72
	137	7
5305-00-854-2185	45	49
2530-00-854-4457	4	4
4730-00-854-5837	105	3
5365-00-854-6720	182	46
5305-00-855-0958	58	28

CROSS-REFERENCE INDEXES

NATIONAL STOCK NUMBER INDEX

STOCK NUMBER	FIG.	ITEM
4730-00-855-4799	77	147
	189	12
5330-00-860-9153	92	2
5330-00-861-1429	148	53
5330-00-861-1431	148	62
5330-00-861-1433	148	52
2805-00-861-1435	148	61
2805-00-861-1437	148	51
2805-00-861-1440	148	54
2520-00-861-1441	148	58
2520-00-861-1442	144	3
4730-00-861-1814	119	26
5315-00-866-3952	64	6
3110-00-866-7252	147	23
5330-00-867-1747	85	5
4240-00-868-7906	158	1
5365-00-868-9569	85	11
5365-00-869-3192	85	12
5330-00-869-4202	85	10
2520-00-871-6772	149	3
4730-00-873-0110	188	14
3020-00-874-6719	186	6
3020-00-874-6722	185	1
4320-00-874-6726	KIT	
5310-00-877-5796	165	10
5310-00-878-7691	182	58
	186	4
5365-00-878-7692	182	49
5310-00-878-7693	185	4
5365-00-878-7694	184	8
5120-00-880-4264	188	37
5310-00-880-7744	4	1
	105	17
5310-00-880-8189	103	6
5315-00-881-3422	186	8
5310-00-882-2319	186	5
5330-00-882-4963	169	30
	172	17
5330-00-882-5029	152	35
5310-00-882-7121	184	5
4730-00-883-0643	77	104
4210-00-885-5724	48	31
3110-00-887-5524	143	48
3020-00-887-8917	184	6
3020-00-887-8918	185	5
5305-00-889-2997	41	1
5305-00-889-2999	13	10
	32	3
5305-00-889-3000	24	9
5305-00-889-3001	13	14

STOCK NUMBER	FIG.	ITEM
5305-00-889-3002	47	9
3120-00-889-8567	64	7
4730-00-890-2251	2	16
2520-00-891-0191	130	4
2520-00-891-0192	130	3
2520-00-891-0194	130	25
2520-00-891-0195	130	24
2520-00-891-0201	130	10
2520-00-891-0202	130	19
5340-00-891-0203	130	20
4730-00-891-0204	130	23
4730-00-891-0205	130	1
4730-00-891-0206	130	16
5365-00-891-0207	130	8
5365-00-891-0214	130	39
5310-00-891-3426	57	10
	66	18
9905-00-893-3570	12	6
	14	5
	18	15
	21	42
	22	4
	34	31
	38	2
	39	7
	40	9
	41	6
	42	6
	160	9
2520-00-895-6454	145	13
5330-00-895-6456	145	14
5325-00-899-1505	45	20
5935-00-899-3131	40	1
5305-00-900-4614	169	17
5935-00-900-6281	36	11
	156	7
5340-00-902-0426	48	14
3110-00-902-3772	120	12
5310-00-902-6676	15	16
5310-00-902-9369	1	40
	136	1
	137	10
5310-00-903-8282	55	22
	137	2
5315-00-904-1643	84	25
5340-00-905-0790	12	5
	18	24
	21	41
3110-00-905-2789	127	45
5310-00-905-8451	13	17

CROSS-REFERENCE INDEXES

NATIONAL STOCK NUMBER INDEX

STOCK NUMBER	FIG.	ITEM
4730-00-908-3193	107	11
4730-00-908-3194	98	8
	156	17
4730-00-908-6292	107	2
	145	3
4730-00-908-6293	56	4
4730-00-908-6294	73	1
2920-00-909-2483	93	1
4730-00-909-8627	98	1
	145	1
5305-00-912-5113	128	10
5365-00-913-1208	142	18
	143	25
5305-00-914-3819	78	12
5305-00-914-3821	76	20
5330-00-914-5828	129	2
5940-00-914-6054	22	7
5305-00-914-6133	161	13
2520-00-914-7301	131	9
	132	9
	133	9
5360-00-914-8353	131	4
5340-00-915-8173	83	3
6150-00-916-2124	45	52
5340-00-921-6993	2	44
4820-00-922-1953	130	38
5340-00-922-6300	21	12
5315-00-923-0268	131	5
3110-00-923-1246	127	42
5999-00-925-6495	24	19
5305-00-925-7635	57	33
5310-00-925-9642	1	35
	76	54
5310-00-925-9645	13	7
5999-00-926-3144	40	10
3110-00-926-4604	152	27
5315-00-928-2336	63	69
5330-00-928-8914	74	4
5340-00-929-1794	18	25
5365-00-930-5141	131	10
	132	10
	133	10
5365-00-930-5143	131	23
5310-00-930-5150	130	7
5330-00-930-5163	130	15
4730-00-930-5392	77	83
	121	3
	122	16
5340-00-930-5717	130	49
5340-00-930-5718	130	22
5315-00-930-6204	130	12
5340-00-930-7601	130	21
5305-00-931-2247	179	7
5365-00-932-1248	131	6
	132	6
	133	6
6680-00-933-3600	24	8
6220-00-933-9521	45	1
6220-00-934-8307	45	38
5310-00-934-9738	58	21
5310-00-934-9739	32	6
5310-00-934-9751	103	13
5310-00-934-9757	1	19
	30	4
	137	29
	138	9
5310-00-934-9758	28	4
	165	16
5905-00-935-3863	21	23
	38	6
	39	5
	41	8
	42	5
	43	16
5120-00-935-7474	190	2
6625-00-936-2139	28	16
2520-00-936-5335	148	46
5310-00-937-0453	92	3
6220-00-937-4721	45	26
5305-00-938-1556	65	24
5315-00-939-0832	65	53
	66	35
2520-00-939-6605	131	3
	132	4
	133	4
5325-00-939-9302	18	30
5305-00-940-8068	180	9
5305-00-940-8069	76	6
5305-00-940-9497	60	14
	61	14
	177	17
5310-00-941-6019	13	25
	24	23
5305-00-941-9426	164	1
5305-00-942-2196	9	22
	27	4
	44	8
	54	21
	57	7
	71	17

CROSS-REFERENCE INDEXES

NATIONAL STOCK NUMBER INDEX

STOCK NUMBER	FIG.	ITEM
5305-00-942-2196	104	9
	164	6
	182	2
	182	25
	187	3
5365-00-943-5352	152	14
5365-00-943-5353	57	21
4030-00-946-8497	58	27
	165	18
5330-00-948-0704	13	15
5330-00-948-0964	45	34
3110-00-948-9797	130	40
2520-00-949-3627	131	11
	132	11
	133	11
2520-00-949-3695	131	7
5305-00-949-6185	78	65
5330-00-949-6241	129	1
4310-00-949-7688	131	12
	132	12
	133	12
2520-00-949-8112	131	18
4730-00-950-6134	78	13
5330-00-950-7731	128	13
5330-00-951-3538	94	10
5315-00-951-4082	116	31
5310-00-951-7209	163	15
3110-00-952-2881	116	26
3110-00-952-2892	116	25
5310-00-953-8703	152	44
5315-00-954-1289	65	52
	66	34
5305-00-954-3938	58	23
5340-00-954-6014	18	29
5315-00-957-0756	161	36
5315-00-957-0764	182	43
5315-00-957-9386	63	37
5305-00-958-5246	57	65
5305-00-958-5247	156	27
5305-00-959-1082	35	4
5305-00-959-2723	57	66
5330-00-963-0275	134	20
5305-00-964-0503	176	5
4730-00-964-1782	71	32
5360-00-964-4546	130	43
5360-00-964-4656	130	42
5330-00-968-1753	13	11
2540-00-968-4060	7	18
4730-00-968-6129	152	10
5120-00-969-0071	190	3

STOCK NUMBER	FIG.	ITEM
3040-00-969-5543	1	1
5310-00-971-7989	1	2
5930-00-972-3314	30	34
6650-00-973-1176	63	59
4730-00-974-7313	78	15
	88	16
5310-00-975-2075	1	44
	8	14
	37	8
	63	43
	76	46
	125	13
	138	13
	180	13
	181	8
5305-00-978-9394	63	30
5305-00-978-9395	51	12
2520-00-979-8765	120	25
	130	29
3120-00-981-5117	109	15
5360-00-982-2040	123	8
5310-00-982-4988	58	11
5940-00-983-4067	12	15
5305-00-983-7450	169	34
5305-00-983-8074	182	47
5305-00-984-4983	43	10
	47	31
5305-00-984-4984	45	36
5305-00-984-4988	47	20
5305-00-984-6189	47	19
5305-00-984-6191	24	6
	25	5
5305-00-984-6193	1	15
	137	24
	138	6
5305-00-984-6194	13	5
	28	21
	45	43
5305-00-984-6195	158	8
5305-00-984-6196	24	26
5305-00-984-6197	30	1
5305-00-984-6201	31	2
5305-00-984-6208	163	22
5305-00-984-6209	13	20
5305-00-984-6210	159	18
5305-00-984-6211	13	19
5305-00-984-6212	28	23
	37	7
	51	18
5340-00-984-8540	21	16

CROSS-REFERENCE INDEXES

NATIONAL STOCK NUMBER INDEX

STOCK NUMBER	FIG.	ITEM
5340-00-984-8540	159	5
5340-00-984-8541	159	16
5310-00-985-0782	48	11
5340-00-985-0823	1	43
	76	43
	138	12
5310-00-987-1294	68	10
5305-00-988-1727	65	4
5305-00-988-3785	161	35
5133-00-988-5694	194	4
5133-00-988-5695	194	5
5133-00-988-5696	194	6
5133-00-988-5697	194	7
5133-00-988-5698	194	8
5133-00-988-5699	194	9
5133-00-988-5701	194	11
5133-00-988-5702	194	12
5133-00-988-5703	194	13
5133-00-988-5705	194	15
5133-00-988-5707	194	17
5133-00-988-5711	194	21
3110-00-989-0739	152	32
5340-00-989-1771	21	43
	119	25
5325-00-989-6286	54	2
5340-00-989-9222	2	40
5305-00-990-0695	68	13
5315-00-990-2630	62	13
5305-00-990-6444	8	28
5305-00-990-8632	61	22
4720-00-993-1792	BULK	14
5305-00-993-1851	15	9
6620-00-993-5546	36	3
5320-00-994-7076	45	27
4730-00-995-1559	2	30
	50	35
	77	9
	108	6
	114	3
	122	42
	139	2
	150	6
4730-00-995-1572	150	5
4730-00-995-1579	139	5
5305-00-995-3444	24	4
	165	23
5999-00-996-3743	128	12
6220-00-999-5285	45	41
6220-00-999-5286	45	35
4730-01-005-0623	107	8
6150-01-005-4773	156	21
4730-01-007-5232	77	110
5315-01-007-8299	161	30
5305-01-010-2362	96	10
5306-01-011-1706	71	2
6145-01-013-1525	BULK	40
9905-01-013-8723	12	3
	18	14
	22	3
	30	22
	34	20
	120	31
5310-01-015-3370	63	10
5307-01-016-4423	112	3
5315-01-016-5658	64	18
5306-01-016-8296	166	2
5365-01-017-2652	139	10
2910-01-017-5314	105	10
5310-01-018-0683	128	16
5365-01-018-5218	135	15
5305-01-018-5592	127	21
5133-01-018-9812	194	22
5133-01-018-9813	194	24
5133-01-018-9814	194	25
5330-01-019-2450	116	23
	147	28
5935-01-019-5156	18	21
5340-01-020-2889	126	4
4730-01-021-3850	189	18
5133-01-021-9307	194	23
5133-01-021-9308	194	29
5133-01-023-1554	194	27
4730-01-024-0915	50	24
4730-01-024-7933	48	5
5365-01-024-8998	76	37
5805-01-026-1442	85	4
5935-01-026-2217	38	7
5935-01-026-2231	21	19
5315-01-026-4522	110	4
5935-01-026-5872	21	7
	39	9
5935-01-026-8549	21	30
1015-01-027-0980	156	25
4730-01-027-2243	114	12
5330-01-027-9446	103	23
4935-01-029-3391	85	2
5310-01-031-1458	89	2
5306-01-031-4845	66	26
	67	1
	71	36

CROSS-REFERENCE INDEXES

NATIONAL STOCK NUMBER INDEX

STOCK NUMBER	FIG.	ITEM	STOCK NUMBER	FIG.	ITEM
6150-01-032-4556	156	28	2520-01-069-7396	184	4
5940-01-035-4212	12	16	4730-01-069-8478	77	4
	22	8	5365-01-069-9183	182	30
4820-01-037-9283	119	20		184	3
5935-01-041-9179	21	36	5935-01-070-3679	12	7
4730-01-042-0228	88	12	4820-01-070-7670	175	16
6145-01-043-0757	BULK	39	3020-01-070-9061	125	2
5330-01-043-7758	182	9	4730-01-070-9214	107	18
5310-01-044-0685	103	22		122	61
4730-01-044-0878	189	7		189	20
5310-01-044-2052	106	14	5307-01-073-5002	73	10
5330-01-044-2096	106	10	4730-01-074-0907	2	19
5310-01-044-2112	106	11		50	7
5935-01-044-8382	15	12		54	7
5970-01-044-8391	15	14	5305-01-075-7066	165	12
5133-01-045-4946	194	3	5935-01-077-2628	34	29
5305-01-045-8389	48	9	5330-01-078-3985	47	11
4933-01-046-7109	188	6	4730-01-079-1986	189	13
4720-01-046-7516	54	3	5306-01-080-5712	74	22
5306-01-047-7815	66	50	5305-01-080-6620	74	11
5305-01-048-6596	47	10	5310-01-080-6631	74	21
1670-01-048-7009	57	18	5305-01-081-5044	55	6
	58	19	5935-01-085-3305	14	10
4730-01-049-8462	9	9	5970-01-085-3431	BULK	23
	77	121	5305-01-085-8197	96	2
4730-01-050-1599	77	47	5340-01-086-6760	193	7
5133-01-051-4114	194	10	6625-01-086-9580	24	7
4820-01-053-5141	142	13	8315-01-086-9635	BULK	7
5133-01-053-7932	194	2	4720-01-088-1085	BULK	18
5330-01-053-9825	120	16	5133-01-088-1690	194	28
	130	9	5340-01-088-2385	105	18
5133-01-056-2873	194	16	5330-01-088-6751	KIT	
5305-01-057-3058	129	5	4730-01-088-9643	77	13
5310-01-057-4995	182	55	5310-01-089-0538	73	5
3120-01-058-1160	142	15	4730-01-089-5902	96	8
4020-01-058-3483	BULK	32	4730-01-090-4922	122	39
5340-01-059-0114	15	11	3040-01-091-0485	101	9
5935-01-059-0117	15	10	4730-01-091-1368	122	25
5330-01-059-4286	15	13	6220-01-093-4439	44	10
3040-01-060-4770	137	15	5340-01-093-6225	71	42
5330-01-063-8978	144	1	5330-01-094-9020	45	40
5310-01-064-3621	86	2	5305-01-094-9275	45	13
5975-01-064-5592	55	33	2940-01-094-9353	106	4
5133-01-065-9942	194	20	5935-01-102-7124	14	6
4730-01-066-1282	77	17	5305-01-102-9565	85	8
	84	16	4730-01-103-3275	150	8
2540-01-068-3071	1	24	4730-01-103-8362	77	40
	5	1		88	19
5330-01-069-3126	125	8	4730-01-104-2268	139	8
5310-01-069-7368	182	53	3120-01-104-5989	76	15

CROSS-REFERENCE INDEXES

NATIONAL STOCK NUMBER INDEX

STOCK NUMBER	FIG.	ITEM
5330-01-105-9156	148	39
5305-01-106-1113	29	1
5330-01-106-7286	135	19
9905-01-107-3274	49	6
4210-01-107-3298	49	1
6685-01-107-3334	49	2
4210-01-107-3418	49	4
9905-01-107-3429	49	7
2815-01-109-1318	101	7
2590-01-109-2075	101	5
5310-01-109-6746	8	16
4210-01-109-7949	48	29
9905-01-109-8111	75	1
5935-01-110-1941	14	9
5315-01-110-4790	109	34
5306-01-112-4339	66	14
5306-01-112-4340	11	19
	68	3
	107	17
	108	13
	122	7
	138	1
	163	17
5306-01-112-4341	48	26
	78	7
	156	20
	159	4
5310-01-112-6120	109	14
	155	8
5306-01-112-7867	65	20
	108	14
5306-01-112-8681	57	58
	66	7
	76	18
	77	57
	122	52
	136	23
	156	5
5306-01-112-8682	109	7
	162	3
5306-01-112-8683	38	5
5306-01-113-0525	32	1
	39	2
	156	23
	161	38
	163	7
4140-01-113-4668	56	7
5340-01-113-5615	71	39
	193	8
5306-01-114-0963	1	11
5306-01-114-0963	66	23
	72	7
	76	27
	77	68
	82	18
	107	23
	108	23
	109	27
	118	1
	122	8
	152	3
	152	38
	161	33
7690-01-114-3702	103	17
5306-01-114-5135	104	4
6680-01-114-7653	36	6
5330-01-114-9226	116	11
	144	14
5935-01-115-0215	56	8
5935-01-116-3431	13	4
4730-01-116-5969	50	12
5330-01-117-8833	116	29
5306-01-118-3133	84	22
1005-01-118-8602	56	10
5306-01-119-6763	16	8
	64	19
	65	57
	77	69
	78	36
	93	9
	123	3
5133-01-119-7884	194	14
5306-01-119-9321	20	17
	78	27
4820-01-120-4532	77	8
	108	1
	122	41
5133-01-121-5002	194	26
5306-01-122-5464	64	1
4720-01-122-9847	BULK	15
5306-01-123-0891	65	10
	66	48
	73	20
	121	11
	122	48
6220-01-123-1353	47	25
4730-01-124-3728	77	61
	78	78
4210-01-125-4294	48	17
4730-01-125-6381	50	38

CROSS-REFERENCE INDEXES

NATIONAL STOCK NUMBER INDEX

STOCK NUMBER	FIG.	ITEM	STOCK NUMBER	FIG.	ITEM
5305-01-126-2322	65	28	5999-01-150-8808	18	33
4730-01-126-9758	119	14		21	28
5133-01-127-6865	194	19		30	36
4720-01-128-0330	2	29		34	12
4730-01-128-3997	117	13	5935-01-152-6814	30	38
3120-01-129-2151	110	12	5340-01-153-9424	104	6
3110-01-129-2512	117	6	5935-01-154-6233	21	27
5305-01-129-4217	101	3		34	11
5310-01-129-8972	117	3	4810-01-154-9991	166	1
5315-01-130-1138	117	5	4810-01-154-9992	166	3
5305-01-130-7925	117	2	2520-01-154-9993	152	1
4320-01-132-0609	85	1	2590-01-155-0106	58	13
4320-01-132-0610	117	1	2590-01-155-0107	58	7
4730-01-132-1183	108	19	2530-01-155-0134	175	13
5365-01-132-3825	109	33	4820-01-155-0138	90	1
5340-01-132-4684	71	41	5930-01-155-7762	105	19
5310-01-132-5309	55	13	5306-01-155-8461	106	15
5340-01-133-4723	83	15	4730-01-156-4835	77	23
5340-01-133-4724	83	14		78	39
4320-01-133-7864	117	11		88	5
5340-01-134-3719	163	5	5306-01-156-5437	66	10
5306-01-134-5721	143	1	5315-01-156-6208	155	9
5305-01-134-5726	159	22	3020-01-156-6212	153	5
5315-01-135-0181	162	7	3805-01-156-6223	59	1
9905-01-137-4775	102	2	5315-01-156-6314	18	34
5305-01-137-6706	101	2		21	29
5340-01-138-4994	165	11		30	37
4730-01-139-1585	88	21		34	13
4720-01-140-0063	2	15	3040-01-156-8106	58	14
5305-01-140-9118	119	19	2590-01-158-4062	182	1
3120-01-140-9939	91	18	4820-01-158-4066	79	4
6250-01-141-1543	47	12	4730-01-158-4081	141	11
5310-01-141-2512	77	49	6680-01-158-4090	28	12
	122	56	6680-01-158-4091	28	10
5930-01-141-5368	13	2	5340-01-158-6585	58	24
4730-01-142-0192	95	1	5315-01-159-1255	106	8
5310-01-142-0326	45	50	5340-01-159-6456	109	29
5340-01-143-6045	97	18	5970-01-162-6918	BULK	27
5330-01-143-8208	101	8	2510-01-163-2703	68	4
5330-01-143-8209	101	10	5930-01-163-3196	31	1
5306-01-144-3080	66	1	5930-01-163-3197	31	6
3120-01-144-3857	91	3	2530-01-163-3321	2	24
4330-01-145-5269	106	9	2990-01-163-8009	180	6
6695-01-146-7132	36	10	3805-01-164-0143	59	5
5935-01-147-0148	12	11	3805-01-164-1975	59	6
5365-01-147-8146	103	25	3040-01-164-7902	20	14
2540-01-147-9977	161	14	5330-01-165-1343	151	11
5935-01-149-5165	18	32	5330-01-165-1355	115	3
	34	15	5330-01-165-1369	115	8
4730-01-150-0877	78	23	5330-01-165-1370	107	24

CROSS-REFERENCE INDEXES

NATIONAL STOCK NUMBER INDEX

STOCK NUMBER	FIG.	ITEM
5330-01-165-1371	117	18
5330-01-165-1372	182	13
2940-01-165-8253	106	7
5330-01-166-1713	141	10
5310-01-166-2617	154	6
	155	5
2590-01-166-6299	120	1
2530-01-167-8051	142	23
2530-01-167-8052	140	18
2530-01-167-8053	146	16
4320-01-167-8099	86	4
2530-01-167-8106	154	1
4320-01-167-8121	73	3
2530-01-169-0033	174	7
5935-01-169-0155	40	2
2520-01-169-2421	152	40
5330-01-169-2461	152	39
4820-01-169-2512	2	32
5330-01-169-3180	KIT	
2530-01-169-3705	173	4
2590-01-170-5026	80	4
2910-01-170-9947	51	6
3110-01-170-9948	161	27
2520-01-171-0027	115	11
2530-01-171-0032	136	15
5306-01-171-0048	1	47
5340-01-171-0053	1	41
5340-01-171-0065	136	27
2910-01-171-0070	51	19
3040-01-171-0087	136	24
2530-01-171-0099	136	12
5340-01-171-0109	51	13
5340-01-171-0110	51	4
2540-01-171-0136	161	5
3040-01-171-0142	152	24
3040-01-171-0143	152	8
2590-01-171-8245	1	28
2590-01-171-8246	1	16
3040-01-171-8265	1	39
3040-01-171-8272	152	22
2530-01-173-4694	5	3
5340-01-174-0489	1	22
9905-01-174-0955	1	17
9905-01-174-0956	1	14
9905-01-174-0957	6	5
9905-01-174-0958	6	10
5340-01-175-0584	8	1
6625-01-175-2503	15	1
6680-01-175-5552	141	1
5306-01-175-7558	32	8
5306-01-175-7558	156	1
5305-01-176-0883	71	6
2530-01-176-1192	6	1
3040-01-176-1210	152	16
4730-01-176-2947	84	6
3040-01-176-2975	1	46
5310-01-176-4000	152	26
2590-01-176-6122	8	27
5340-01-176-7491	152	4
5330-01-176-7535	84	2
9320-01-176-8611	52	3
9320-01-176-8612	52	1
3020-01-176-8614	152	28
9320-01-176-9177	52	5
9320-01-176-9178	52	2
9320-01-176-9179	52	6
4320-01-176-9434	86	13
4320-01-176-9441	86	7
4320-01-176-9442	KIT	
4710-01-176-9631	2	52
4710-01-176-9632	2	2
5365-01-177-0952	8	36
5340-01-177-1050	152	25
3040-01-177-4007	1	34
4720-01-177-4712	48	41
5360-01-177-4881	1	21
3020-01-177-5394	152	7
5306-01-177-5878	152	45
3040-01-177-8601	1	9
5315-01-177-9865	152	21
5340-01-178-2176	50	36
5340-01-178-2177	50	27
5360-01-178-2192	161	29
5340-01-178-2201	8	26
2590-01-178-3142	161	8
5330-01-178-3361	51	14
2540-01-178-5401	161	7
2540-01-178-5402	161	40
2530-01-178-5403	136	10
2590-01-178-5415	10	22
2590-01-178-5723	51	8
5340-01-178-6107	152	2
5340-01-178-6108	152	18
2540-01-178-7083	161	2
2540-01-178-7116	161	37
5360-01-178-7468	1	6
5330-01-178-9325	152	36
3020-01-179-1030	152	15
5340-01-179-1045	50	30
5340-01-179-1046	50	28

CROSS-REFERENCE INDEXES

NATIONAL STOCK NUMBER INDEX

STOCK NUMBER	FIG.	ITEM
2590-01-179-1047	182	59
2590-01-179-1050	KIT	
2590-01-179-1051	183	17
2590-01-179-1052	183	2
2590-01-179-1053	183	19
2590-01-179-1054	183	20
2590-01-179-1055	182	44
2590-01-179-1056	182	65
3110-01-179-1159	183	7
3110-01-179-1162	183	18
3110-01-179-1164	183	10
3110-01-179-1165	183	21
9905-01-179-1166	138	7
9905-01-179-1167	137	25
9905-01-179-1168	137	27
5315-01-179-1202	183	23
5360-01-179-1217	183	33
3020-01-179-1252	182	21
3020-01-179-1253	182	15
5305-01-179-1258	183	26
5365-01-179-1264	183	6
5365-01-179-1265	183	24
5310-01-179-1284	183	25
5305-01-179-1302	183	29
4720-01-179-1323	77	31
3040-01-179-1344	136	8
3040-01-179-1345	8	20
3040-01-179-1347	136	21
3040-01-179-1348	136	22
3040-01-179-1349	136	3
5340-01-179-1358	183	32
3040-01-179-1410	152	5
3040-01-179-1411	182	48
3040-01-179-1412	182	10
4720-01-179-2479	50	25
4730-01-179-2489	152	9
4720-01-179-2927	2	7
4720-01-179-2929	2	39
4730-01-179-4110	77	62
2590-01-179-4304	8	2
4710-01-179-4348	2	3
2510-01-179-4388	KIT	
5315-01-179-4535	148	49
3040-01-179-5795	1	4
4820-01-179-6307	2	5
2590-01-179-7527	87	1
2590-01-179-7528	87	6
2590-01-179-7529	119	3
4730-01-179-7530	119	41
3110-01-179-7556	58	8

STOCK NUMBER	FIG.	ITEM
4730-01-179-7576	78	87
4730-01-179-7578	88	20
5306-01-179-7600	136	25
4710-01-179-7618	78	41
4710-01-179-7619	78	57
4710-01-179-7620	78	43
4710-01-179-7621	78	56
4710-01-179-7622	78	42
4710-01-179-7623	78	60
4710-01-179-7624	78	94
4710-01-179-7627	78	82
4710-01-179-7632	78	49
4710-01-179-7633	78	19
4710-01-179-7634	88	15
3020-01-179-8072	152	13
2590-01-179-9052	76	49
2815-01-179-9053	76	14
5340-01-179-9054	76	10
2815-01-179-9055	83	1
5355-01-179-9116	76	57
3120-01-179-9151	76	35
	76	39
	76	51
	76	60
	76	63
	76	66
	76	69
4720-01-179-9190	77	94
4720-01-179-9191	77	39
4710-01-179-9199	88	14
4710-01-179-9200	88	18
3040-01-179-9210	76	58
3040-01-179-9211	76	41
3040-01-179-9217	76	33
3040-01-179-9218	76	32
3040-01-179-9219	76	50
3040-01-179-9220	76	68
3040-01-179-9221	76	65
3040-01-179-9222	76	59
3040-01-179-9223	76	38
3040-01-179-9241	76	48
5306-01-179-9462	152	41
5330-01-179-9494	51	5
5306-01-179-9528	136	6
5340-01-180-2603	8	35
2910-01-180-2991	51	11
4710-01-180-5555	48	15
2590-01-180-5556	76	19
2510-01-180-5558	76	13
2590-01-180-5559	85	18

CROSS-REFERENCE INDEXES

NATIONAL STOCK NUMBER INDEX

STOCK NUMBER	FIG.	ITEM	STOCK NUMBER	FIG.	ITEM
5340-01-180-5560	78	34	5340-01-181-6159	79	8
5340-01-180-5561	78	33	2590-01-181-6164	84	1
5340-01-180-5562	78	40	4720-01-181-6166	77	112
5340-01-180-5563	78	80	4720-01-181-6167	77	114
2815-01-180-5564	82	1	2930-01-181-6177	84	5
5930-01-180-5628	20	12	5365-01-181-6330	180	14
	36	4	3020-01-181-6334	148	13
4720-01-180-5629	77	99	3040-01-181-6336	148	26
4710-01-180-5637	48	33	3040-01-181-6337	147	4
5340-01-180-6681	161	3	3040-01-181-6338	148	30
5340-01-180-6698	161	39	5340-01-181-6339	148	36
5340-01-180-6780	50	5	2530-01-181-6340	145	26
5340-01-180-6781	50	6	2530-01-181-6341	145	22
5340-01-180-8599	77	90	2530-01-181-6342	145	15
4730-01-180-8600	79	9	9535-01-181-6344	162	23
5310-01-180-8601	84	14	2540-01-181-6349	162	1
2590-01-180-8602	84	8	2510-01-181-6350	162	4
4730-01-180-8605	79	11	9905-01-181-6396	146	6
4730-01-180-8606	79	12	9905-01-181-6397	159	1
4730-01-180-8607	79	14	5315-01-181-6409	162	5
4730-01-180-8608	77	105	5365-01-181-6413	148	60
5340-01-180-8609	78	5	5355-01-181-6415	1	20
5315-01-180-8641	60	20		62	4
	61	15		76	55
	176	1		137	30
5340-01-180-8673	86	41		138	5
5340-01-180-9858	54	25		161	22
5670-01-180-9909	7	6	5330-01-181-6419	147	18
5330-01-180-9913	147	14	2520-01-181-6423	124	5
2590-01-180-9914	17	7	3020-01-181-6430	146	19
2590-01-180-9915	17	2	3040-01-181-6431	148	16
5365-01-180-9928	147	25	5365-01-181-6436	148	64
5365-01-180-9929	147	25	5365-01-181-6437	146	14
3040-01-181-0306	1	7		147	1
3120-01-181-1625	1	49	5365-01-181-6438	147	10
	137	32	3120-01-181-6439	148	25
	138	21	5330-01-181-6441	145	7
3120-01-181-1628	136	11	5310-01-181-6443	147	12
3120-01-181-1629	8	33	4730-01-181-6454	146	25
5315-01-181-1687	161	28	4720-01-181-6461	77	15
3120-01-181-5080	136	2	4720-01-181-6462	77	56
5340-01-181-5759	2	35	3020-01-181-6468	KIT	
5930-01-181-6114	36	1	4710-01-181-6470	146	23
5340-01-181-6133	78	64	4820-01-181-6471	142	12
5340-01-181-6134	78	69	3020-01-181-6473	148	19
5340-01-181-6135	78	26	5365-01-181-6477	148	18
5340-01-181-6136	78	28	3040-01-181-6485	148	10
5340-01-181-6137	78	58	3040-01-181-6486	148	42
5340-01-181-6138	78	10	3040-01-181-6487	148	8
5340-01-181-6139	78	79	3040-01-181-6488	148	55

CROSS-REFERENCE INDEXES

NATIONAL STOCK NUMBER INDEX

STOCK NUMBER	FIG.	ITEM
3020-01-181-6489	146	20
5340-01-181-6494	141	12
5340-01-181-6495	144	10
5340-01-181-6496	144	22
5340-01-181-6497	147	15
5340-01-181-6498	146	8
5340-01-181-6499	142	9
5340-01-181-6500	146	18
5340-01-181-6503	145	21
4710-01-181-6518	142	16
9390-01-181-6525	145	2
3040-01-181-6528	147	19
3040-01-181-6530	148	72
3040-01-181-6531	146	1
4720-01-181-8649	2	41
9515-01-181-9514	37	4
9515-01-181-9515	37	1
6680-01-182-1078	36	7
5340-01-182-1079	23	1
5340-01-182-1080	30	17
6220-01-182-1082	30	14
6220-01-182-1083	25	6
5930-01-182-1223	31	4
6680-01-182-1251	20	19
2590-01-182-1256	17	5
2590-01-182-1257	11	16
2590-01-182-1258	11	9
2590-01-182-1259	11	10
6150-01-182-1260	35	7
2590-01-182-1261	24	14
6150-01-182-1262	28	5
2590-01-182-1263	17	4
2590-01-182-1264	11	18
6140-01-182-1265	17	6
6150-01-182-1266	11	20
6150-01-182-1267	33	3
5945-01-182-1272	30	12
6680-01-182-1280	20	15
5340-01-182-1292	23	8
3040-01-182-1306	60	1
2920-01-182-1318	11	5
2920-01-182-1320	11	4
2920-01-182-1321	11	3
2920-01-182-1322	11	2
2920-01-182-1323	37	5
5995-01-182-1324	37	3
2590-01-182-4138	33	2
4820-01-182-4215	78	86
4720-01-182-4249	77	26
4210-01-182-7420	48	27
9905-01-182-7485	30	30
5930-01-182-7486	31	7
6160-01-182-7492	16	1
5307-01-182-7581	16	6
6220-01-182-7606	44	2
4320-01-182-7641	KIT	
9905-01-182-7762	82	5
2590-01-182-8765	40	7
2590-01-182-8767	57	35
2590-01-182-8768	57	53
2590-01-182-8769	57	42
2510-01-182-8771	9	20
5340-01-182-8773	150	2
2520-01-182-8774	151	7
5340-01-182-8775	140	3
5340-01-182-8776	109	13
4140-01-182-8905	109	36
5330-01-182-8916	151	1
4030-01-182-8931	57	31
	69	3
3120-01-182-8955	91	16
4730-01-182-8968	104	20
5340-01-182-8987	79	15
5330-01-182-9005	57	70
4720-01-182-9012	77	79
4720-01-182-9013	77	30
4720-01-182-9014	88	6
4720-01-182-9015	88	7
4720-01-182-9017	121	12
5340-01-182-9023	57	27
4730-01-182-9035	122	28
3020-01-182-9036	115	4
4330-01-182-9042	KIT	
4330-01-182-9043	KIT	
9320-01-183-1731	84	29
5340-01-183-2619	9	25
5340-01-183-2620	104	23
5340-01-183-2626	66	15
2910-01-183-2627	105	14
2520-01-183-2638	129	7
5365-01-183-2639	115	5
2520-01-183-2641	116	22
2990-01-183-2642	104	18
2530-01-183-2643	KIT	
2590-01-183-2644	KIT	
2530-01-183-2645	KIT	
2530-01-183-2646	KIT	
3110-01-183-2686	116	15
9905-01-183-2687	75	3
9905-01-183-2688	75	2

CROSS-REFERENCE INDEXES

NATIONAL STOCK NUMBER INDEX

STOCK NUMBER	FIG.	ITEM	STOCK NUMBER	FIG.	ITEM
9905-01-183-2689	169	26	2590-01-183-6824	72	1
	172	3	4320-01-183-6826	KIT	
9905-01-183-2692	111	5	2530-01-183-6827	169	21
5330-01-183-2706	71	31	5340-01-183-6829	169	19
5330-01-183-2707	71	4	5315-01-183-6832	178	7
3020-01-183-2712	109	21	5340-01-183-6836	170	1
4010-01-183-2714	109	10	5330-01-183-6839	175	4
3120-01-183-2723	60	22	2540-01-183-6840	9	3
	61	21	5310-01-183-6841	153	6
3120-01-183-2725	169	37		154	7
	170	15		155	6
	172	6	5330-01-183-6853	151	13
	172	23	5307-01-183-6855	16	5
4730-01-183-2728	104	12	5340-01-183-6863	104	14
5640-01-183-2729	67	5	2520-01-183-6864	149	1
5340-01-183-2734	66	49	2590-01-183-6865	178	20
5340-01-183-2736	114	17	4710-01-183-6868	114	11
5340-01-183-2737	116	21	4710-01-183-6869	114	10
5340-01-183-2739	103	15	4710-01-183-6870	114	19
5306-01-183-2740	103	16	3040-01-183-6876	151	21
5330-01-183-2741	57	69	3040-01-183-6891	175	9
4720-01-183-2745	122	55	9515-01-183-6893	7	23
4720-01-183-2746	122	12	4710-01-183-6898	104	1
5365-01-183-2749	91	23	4320-01-183-6902	KIT	
5365-01-183-2750	178	8	2530-01-183-6905	175	5
5365-01-183-2751	178	9	4820-01-183-6907	170	24
5365-01-183-2752	178	10	4820-01-183-6908	170	17
5365-01-183-2753	178	11	4730-01-183-7167	189	3
5365-01-183-2754	169	13	2520-01-183-8347	91	27
	172	12	4140-01-183-8348	111	1
5365-01-183-2755	169	14	2520-01-183-8349	116	12
	172	13	2520-01-183-8350	116	2
3040-01-183-2758	115	10	2520-01-183-8351	116	18
9330-01-183-2763	71	34	5340-01-183-8352	156	26
5365-01-183-2770	57	57	5340-01-183-8353	156	3
5365-01-183-2772	169	15	2540-01-183-8355	178	18
	172	2	3040-01-183-8356	178	16
5340-01-183-2776	71	33	3040-01-183-8357	177	1
5340-01-183-2777	71	25	2530-01-183-8358	174	5
5340-01-183-2778	71	29	5330-01-183-8359	174	4
5340-01-183-2779	65	14	4730-01-183-8360	169	33
4710-01-183-2783	105	6	4820-01-183-8362	170	31
4710-01-183-2784	105	13	2590-01-183-8368	58	18
3805-01-183-2785	58	15	6150-01-183-8380	156	8
5315-01-183-2786	169	18	4730-01-183-8389	114	7
6680-01-183-4399	96	3	5995-01-183-8398	159	20
4320-01-183-6818	73	21	3020-01-183-8400	116	4
2510-01-183-6821	66	25	3020-01-183-8401	116	7
2530-01-183-6822	KIT		3020-01-183-8402	116	30
2540-01-183-6823	178	1	3020-01-183-8403	116	27

CROSS-REFERENCE INDEXES

NATIONAL STOCK NUMBER INDEX

STOCK NUMBER	FIG.	ITEM
3020-01-183-8404	116	8
3120-01-183-8417	70	17
5305-01-183-8422	173	2
4730-01-183-8429	114	9
4710-01-183-8443	114	8
4710-01-183-8444	114	6
3040-01-183-8449	116	17
3040-01-183-8450	151	14
5365-01-183-8453	116	5
5340-01-183-8466	71	18
5340-01-183-8467	71	12
5340-01-183-8468	71	8
5340-01-183-8469	71	21
5340-01-183-8470	178	2
3040-01-183-8481	169	23
2520-01-183-8482	141	5
3040-01-183-8485	116	1
3040-01-183-8486	169	32
	172	19
2815-01-184-1886	104	13
4730-01-184-1887	170	14
4820-01-184-1888	170	30
4820-01-184-1889	170	27
4820-01-184-1890	170	22
4820-01-184-1892	169	3
4820-01-184-1893	169	2
2530-01-184-1894	169	36
	172	21
2530-01-184-1895	169	28
	172	15
2530-01-184-1896	172	4
4320-01-184-1897	154	5
3110-01-184-1905	116	10
5305-01-184-1913	170	33
5365-01-184-1914	170	40
5365-01-184-1915	170	25
5365-01-184-1916	169	6
5365-01-184-1917	167	5
5330-01-184-1920	71	28
4820-01-184-1922	170	5
3020-01-184-1932	93	13
5365-01-184-1947	178	12
5365-01-184-1955	169	29
	172	16
4710-01-184-4035	96	4
3830-01-184-4774	57	9
3830-01-184-4775	57	37
3830-01-184-4776	57	41
2590-01-184-4778	57	15
2590-01-184-4781	66	41

STOCK NUMBER	FIG.	ITEM
2590-01-184-4783	61	17
2590-01-184-4784	66	32
5315-01-184-4785	57	8
2590-01-184-4786	68	11
2590-01-184-4788	68	16
2590-01-184-4789	68	17
2520-01-184-4799	151	4
2520-01-184-4800	151	8
	151	18
3040-01-184-4817	146	21
2510-01-184-4818	162	16
2520-01-184-4821	151	17
5340-01-184-4822	140	7
5340-01-184-4824	109	3
2510-01-184-4826	91	24
2940-01-184-4827	103	7
9905-01-184-4833	181	9
5340-01-184-4839	140	13
5315-01-184-4841	57	51
5315-01-184-4842	57	3
5340-01-184-4850	104	10
3830-01-184-4851	57	45
3020-01-184-4852	109	9
4720-01-184-4853	103	3
3120-01-184-4859	57	4
3120-01-184-4860	140	4
	140	8
	140	14
5315-01-184-4868	57	44
5330-01-184-4881	BULK	33
5330-01-184-4882	64	13
5340-01-184-4890	108	15
5330-01-184-4898	57	61
5330-01-184-4899	57	62
5330-01-184-4900	57	67
5330-01-184-4901	57	64
5330-01-184-4902	57	68
5330-01-184-4903	57	63
5330-01-184-4904	57	60
9515-01-184-4955	65	27
9515-01-184-4956	65	25
9515-01-184-4957	65	1
9515-01-184-4961	65	49
9515-01-184-4964	65	35
9515-01-184-4970	65	36
4330-01-184-4976	118	3
3830-01-184-4977	57	40
4720-01-184-5453	2	36
5307-01-184-5875	1	38
5307-01-184-5876	1	3

CROSS-REFERENCE INDEXES

NATIONAL STOCK NUMBER INDEX

STOCK NUMBER	FIG.	ITEM
5340-01-184-6407	71	5
2815-01-184-6604	96	1
6680-01-184-9213	84	3
2590-01-185-0169	57	29
5306-01-185-0170	152	46
2590-01-185-0173	119	16
5315-01-185-0327	143	42
5365-01-185-0337	167	10
4010-01-185-0406	188	21
5340-01-185-0435	172	25
5340-01-185-0456	35	3
4730-01-185-0472	141	9
5340-01-185-0511	143	18
2815-01-185-0535	143	21
9905-01-185-2642	86	9
5307-01-185-3544	8	17
4820-01-185-5760	105	2
4820-01-185-5763	143	15
4820-01-185-5764	143	20
4820-01-185-5765	143	12
4820-01-185-5768	143	32
4820-01-185-5769	143	6
4820-01-185-5770	143	7
5360-01-185-5833	143	5
5360-01-185-5834	143	22
5360-01-185-5835	143	36
5330-01-185-5840	143	4
5330-01-185-5841	143	28
5330-01-185-5842	143	26
4820-01-185-5847	143	23
3120-01-185-5862	143	35
3040-01-185-5908	143	37
3040-01-185-5909	143	41
3020-01-185-5913	148	21
5340-01-185-5914	143	19
5340-01-185-5925	143	3
5305-01-185-8466	86	42
5315-01-185-8519	183	15
5365-01-185-8521	97	16
5360-01-185-8524	86	27
5360-01-185-8525	86	19
3120-01-185-8594	86	11
5340-01-185-8623	96	7
5360-01-186-1129	161	32
4320-01-186-3334	182	18
3040-01-186-3395	147	13
5340-01-186-3402	148	74
3130-01-186-3408	147	24
5306-01-186-5374	66	31
5310-01-186-5425	120	21
5330-01-186-5856	47	24
9515-01-186-5878	7	7
9515-01-186-5879	7	21
9515-01-186-5880	7	8
9515-01-186-5881	7	4
9515-01-186-5883	7	19
4730-01-186-5991	95	5
5330-01-186-7168	120	5
9905-01-186-7322	26	7
9905-01-186-7323	26	9
9905-01-186-7324	26	8
3110-01-186-7464	86	17
5360-01-186-7496	86	21
5330-01-186-7541	98	7
4330-01-186-7893	KIT	
2520-01-186-7894	181	16
3040-01-186-7895	181	10
5315-01-186-7991	188	24
4710-01-186-8000	78	74
3040-01-186-8002	76	42
3040-01-186-8003	76	34
3040-01-186-8004	76	62
5365-01-186-8009	188	25
5340-01-186-8017	77	125
5340-01-186-8018	77	124
2925-01-186-9497	120	15
5365-01-186-9610	120	17
9320-01-186-9781	52	4
2520-01-187-0360	148	48
2530-01-187-0361	147	5
2590-01-187-0362	145	9
4820-01-187-0556	142	17
	143	24
3040-01-187-0571	61	1
5340-01-187-0904	57	54
3040-01-187-0990	132	18
2530-01-187-0993	91	8
5340-01-187-0994	91	7
9515-01-187-0995	7	10
4710-01-187-0997	105	11
4810-01-187-4925	94	11
5330-01-187-6124	120	13
5315-01-187-6329	120	14
9905-01-187-6447	110	21
9905-01-187-6448	103	12
9905-01-187-6453	66	52
4820-01-187-6815	83	9
9905-01-187-8429	173	7
5315-01-187-8816	120	10
2940-01-187-9448	103	11

CROSS-REFERENCE INDEXES

NATIONAL STOCK NUMBER INDEX

STOCK NUMBER	FIG.	ITEM
9515-01-187-9513	7	25
2940-01-187-9535	103	24
5305-01-187-9547	48	38
2815-01-188-3265	101	6
3120-01-188-5123	140	12
5330-01-188-5125	147	7
2520-01-188-7534	KIT	
4730-01-188-8134	82	11
4710-01-189-0708	126	2
4710-01-189-0709	126	3
4710-01-189-0710	126	7
4710-01-189-0711	126	8
4710-01-189-0712	126	9
4710-01-189-0713	126	11
4710-01-189-0714	126	12
3020-01-189-1014	127	12
4710-01-189-1697	126	10
4710-01-189-1698	126	14
4710-01-189-1699	126	15
4710-01-189-1700	126	18
4320-01-189-1770	86	26
4320-01-189-1771	86	18
4820-01-189-1773	89	17
4820-01-189-1774	89	8
2520-01-189-1775	135	14
4820-01-189-1798	130	32
3020-01-189-1803	127	39
4710-01-189-2100	126	20
4820-01-189-2145	89	7
2520-01-189-2146	134	21
3040-01-189-2171	125	5
4710-01-189-4565	126	13
3040-01-189-4624	127	23
9905-01-189-5381	73	18
2530-01-189-6400	182	34
2590-01-189-6404	43	1
4010-01-189-6455	182	29
3010-01-189-6460	182	23
5306-01-189-6462	182	37
5340-01-189-6463	32	4
5340-01-189-6464	32	7
5340-01-189-6465	28	2
2540-01-189-6472	182	27
3950-01-189-6478	182	6
5340-01-189-6487	182	32
9515-01-189-6488	16	16
3040-01-189-6501	182	41
2520-01-189-6591	132	24
	133	24
3040-01-189-6603	127	32
3040-01-189-6604	127	14
2520-01-189-6617	127	2
2520-01-189-6618	126	1
4730-01-189-6694	128	5
3020-01-189-6702	131	27
3010-01-189-6725	134	11
5360-01-189-7782	120	29
4820-01-189-8274	89	4
5310-01-189-8467	55	2
4730-01-189-8578	130	28
3040-01-189-8647	134	9
3020-01-189-8868	134	7
2520-01-189-8954	128	15
3040-01-189-8960	135	18
3040-01-189-8961	133	18
5315-01-189-9769	148	31
5330-01-189-9781	85	17
4710-01-189-9803	78	3
4710-01-189-9804	78	18
4710-01-189-9805	78	17
4710-01-189-9806	78	75
4710-01-189-9807	78	91
4710-01-189-9808	78	68
4710-01-189-9809	78	72
4710-01-189-9810	78	83
4710-01-189-9811	78	96
4710-01-189-9812	78	77
4710-01-189-9813	78	95
4710-01-189-9814	78	81
4330-01-189-9817	KIT	
5340-01-189-9820	71	1
5330-01-189-9825	9	5
4820-01-190-0070	89	16
3040-01-190-0449	127	29
3040-01-190-0450	127	10
4710-01-190-0840	48	7
4710-01-190-0841	48	2
4710-01-190-0842	48	22
4810-01-190-0967	89	14
4140-01-190-1023	135	10
3020-01-190-1102	127	34
4730-01-190-2534	73	6
2520-01-190-2537	134	24
2520-01-190-4298	131	2
	132	5
	133	5
7690-01-190-5184	173	6
7690-01-190-5197	118	8
2520-01-190-9727	134	23
5330-01-191-0494	134	15

CROSS-REFERENCE INDEXES

NATIONAL STOCK NUMBER INDEX

STOCK NUMBER	FIG.	ITEM
5330-01-191-0495	125	4
5330-01-191-0514	128	8
5330-01-191-0530	127	52
5306-01-191-2451	16	14
5330-01-191-2531	128	4
3020-01-191-2736	127	9
3020-01-191-2737	127	47
3020-01-191-2738	125	10
5365-01-191-2994	86	15
5305-01-191-3022	86	38
5330-01-191-3178	13	27
5330-01-191-3185	135	21
5315-01-191-3384	132	3
	133	3
3040-01-191-4160	127	44
4320-01-191-4261	73	16
4320-01-191-4310	73	9
4820-01-191-4370	89	15
3020-01-191-4404	132	7
	133	7
3040-01-191-5141	127	13
5320-01-191-6351	126	6
5340-01-191-6460	3	4
3020-01-191-6677	127	50
5365-01-191-8015	86	45
5306-01-191-8155	89	13
5365-01-191-8207	89	9
4720-01-191-8334	54	12
2930-01-191-8466	113	15
2930-01-191-9388	113	14
3020-01-191-9441	127	36
9905-01-191-9595	29	3
9905-01-192-0284	26	1
9905-01-192-0285	26	13
9905-01-192-0286	26	11
9905-01-192-0287	26	10
9905-01-192-0288	26	4
9905-01-192-0289	29	2
3040-01-192-1633	74	9
2530-01-192-2430	120	8
9905-01-192-2482	26	2
9905-01-192-2483	26	6
9905-01-192-2802	55	21
9905-01-192-2803	29	6
9905-01-192-2804	26	12
5330-01-192-3367	148	38
3110-01-192-3388	135	17
4710-01-192-3460	113	1
4730-01-192-3497	122	20
3020-01-192-3686	127	41
4320-01-192-3698	73	13
4730-01-192-4417	77	44
2930-01-192-4583	109	6
2930-01-192-4681	113	11
2990-01-192-4685	104	11
4730-01-192-4729	2	53
	139	7
9905-01-192-4955	29	5
9905-01-192-4956	29	4
9905-01-192-5549	85	7
9320-01-192-5593	55	4
2520-01-192-5607	74	19
2520-01-192-5674	149	2
2520-01-192-5675	149	10
2520-01-192-5680	74	3
2520-01-192-5717	74	13
4720-01-192-5869	BULK	17
6105-01-192-6320	55	8
5340-01-192-7041	55	14
5120-01-192-7620	193	4
2540-01-192-7974	54	26
2930-01-192-8237	113	18
2930-01-192-8238	113	6
2510-01-192-8275	10	23
2520-01-192-8348	74	16
3020-01-192-8391	127	28
4710-01-192-8519	78	16
4710-01-192-8520	78	55
4710-01-192-8521	78	51
4710-01-192-8522	78	30
4710-01-192-8523	78	9
4710-01-192-8524	78	25
4710-01-192-8525	78	63
4710-01-192-8526	78	97
4710-01-192-8527	78	62
4710-01-192-8528	78	76
5310-01-192-8884	126	5
5330-01-192-9326	148	73
5330-01-192-9327	142	22
5330-01-192-9328	146	24
5330-01-192-9330	151	6
5330-01-192-9332	20	20
5330-01-192-9336	84	18
5330-01-192-9337	146	15
	147	2
4730-01-192-9578	108	11
	122	17
	150	11
4730-01-192-9590	88	22
4730-01-192-9593	77	115

CROSS-REFERENCE INDEXES

NATIONAL STOCK NUMBER INDEX

STOCK NUMBER	FIG.	ITEM	STOCK NUMBER	FIG.	ITEM
4720-01-192-9637	77	140	5320-01-193-9279	55	20
4720-01-192-9639	77	10	5310-01-193-9502	55	23
4720-01-192-9643	121	2	9905-01-193-9772	74	24
3020-01-192-9770	127	40	5306-01-194-0002	76	47
3040-01-192-9797	173	13	5306-01-194-0003	76	76
4710-01-192-9815	78	54	5306-01-194-0004	76	71
4710-01-192-9816	78	52	4720-01-194-0036	122	51
4710-01-192-9817	78	53	4720-01-194-0037	122	50
4710-01-192-9818	78	31	4730-01-194-0144	77	81
4710-01-192-9820	78	22		88	2
4710-01-192-9821	78	21	4730-01-194-0147	77	139
4710-01-192-9822	78	90	4730-01-194-0148	78	89
5330-01-193-0185	146	22	4820-01-194-0196	79	1
5330-01-193-0186	43	15	2930-01-194-0304	55	3
5330-01-193-0204	146	7	4710-01-194-0333	78	70
5330-01-193-0205	142	10	5306-01-194-0569	127	1
5330-01-193-0206	148	63	5306-01-194-0587	16	12
5330-01-193-0208	41	4	5306-01-194-0588	69	2
5330-01-193-0228	9	17	5306-01-194-0589	60	24
3110-01-193-0427	127	17		77	126
9905-01-193-1237	183	13	5306-01-194-0590	77	133
5340-01-193-1744	85	13	5306-01-194-0591	66	29
4730-01-193-2587	121	15		79	3
5365-01-193-2611	130	51		83	2
5365-01-193-2940	73	14	5365-01-194-0756	127	37
5365-01-193-2947	127	24	5365-01-194-0757	110	8
4320-01-193-3330	117	10	5315-01-194-0813	181	14
4320-01-193-3605	74	1	5315-01-194-0814	145	18
2590-01-193-3610	112	2		145	28
4730-01-193-3641	119	21	5315-01-194-0815	145	10
5305-01-193-4083	169	24		145	23
5310-01-193-4521	89	12	5365-01-194-0878	115	6
5310-01-193-4522	89	3	4730-01-194-1971	114	5
5120-01-193-5061	193	6	4730-01-194-1983	77	129
5340-01-193-6687	182	4		78	93
2520-01-193-6742	152	20	4730-01-194-1984	78	73
2540-01-193-6778	161	11	4730-01-194-1985	78	85
2540-01-193-6783	161	10	4720-01-194-1991	2	13
5315-01-193-7064	73	19	4730-01-194-2163	146	2
5365-01-193-7137	132	23	4730-01-194-2164	146	3
	133	23	4730-01-194-2165	146	28
5365-01-193-7138	127	48	5306-01-194-2981	146	17
5365-01-193-7139	127	15	5305-01-194-2999	145	19
2510-01-193-7179	91	11	5305-01-194-3000	146	27
5305-01-193-7193	8	12	5305-01-194-3001	57	30
5340-01-193-7194	57	1	5310-01-194-3122	110	10
4730-01-193-7391	122	19	5360-01-194-3159	132	2
4730-01-193-7688	78	45		133	2
4730-01-193-7689	78	84	5360-01-194-3175	145	20
3110-01-193-7908	134	3	5360-01-194-3176	142	20

CROSS-REFERENCE INDEXES

NATIONAL STOCK NUMBER INDEX

STOCK NUMBER	FIG.	ITEM	STOCK NUMBER	FIG.	ITEM
5365-01-194-4936	9	16	5310-01-195-5083	147	22
5306-01-194-4974	65	15	5310-01-195-5095	162	12
	66	36	3110-01-195-5142	133	17
	109	2	3120-01-195-5155	132	20
	159	7		133	20
	165	2	5360-01-195-5586	130	41
5340-01-194-5125	181	13	5306-01-195-5809	174	6
4730-01-194-5134	77	50	5340-01-195-5913	77	34
	122	57	5340-01-195-5914	79	10
5315-01-194-5182	143	31	5340-01-195-5915	79	13
5315-01-194-5183	143	34	5307-01-195-5949	138	14
5365-01-194-5266	117	16	5340-01-195-5959	128	11
5340-01-194-5296	55	32	5365-01-195-6221	145	6
5340-01-194-5302	84	28	5306-01-195-6633	137	5
4730-01-194-5336	114	14	5306-01-195-6634	137	17
5310-01-194-6453	55	12	5306-01-195-7921	48	43
5306-01-194-7033	76	77	5305-01-195-7931	7	5
5365-01-194-8524	144	6	3120-01-195-7988	57	5
5365-01-194-8529	140	11	3120-01-195-7990	57	50
5310-01-194-8903	132	15	5340-01-195-8016	103	10
	133	15	4720-01-195-8497	77	127
5365-01-194-8937	86	39	4730-01-195-8513	157	2
5310-01-194-9232	149	7	4720-01-195-9125	77	146
3120-01-194-9293	57	47	5306-01-195-9819	143	8
5315-01-194-9347	85	19	5305-01-196-0217	45	46
5360-01-194-9423	142	14	5306-01-196-0218	103	2
4730-01-195-0353	114	13	5306-01-196-0219	115	1
	139	6	5305-01-196-0222	30	8
3040-01-195-0500	134	14	5306-01-196-0442	79	5
5120-01-195-0640	188	15		87	3
5306-01-195-1553	89	10		115	9
5306-01-195-1579	91	25		117	20
5306-01-195-1580	122	27		122	33
5306-01-195-1581	124	2	5306-01-196-0444	91	17
5305-01-195-1592	147	20	5306-01-196-0445	108	5
5305-01-195-1594	57	2	5340-01-196-0641	77	70
5340-01-195-1714	BULK	12	2590-01-196-1147	55	30
5133-01-195-1957	193	2	5306-01-196-3856	142	3
5306-01-195-3254	169	16	5365-01-196-4020	148	29
	172	1	4730-01-196-4218	77	78
5340-01-195-3387	77	89	5305-01-196-5572	9	24
4720-01-195-3837	77	137	5365-01-196-6702	147	29
4720-01-195-3838	77	111	5306-01-196-6740	151	15
4720-01-195-3840	77	119	5306-01-196-6741	91	21
4720-01-195-3841	77	113	5315-01-196-6783	178	17
4720-01-195-3842	77	103	3120-01-196-8055	57	28
4720-01-195-3843	77	148	5365-01-196-8095	146	12
4720-01-195-3844	77	120		147	7
5306-01-195-5011	146	13	5340-01-197-0926	77	35
	147	3	5305-01-197-1368	68	15

CROSS-REFERENCE INDEXES

NATIONAL STOCK NUMBER INDEX

STOCK NUMBER	FIG.	ITEM
5305-01-197-1368	162	17
5365-01-197-1558	147	29
5365-01-197-1559	146	12
	147	7
5365-01-197-1560	146	12
	147	7
5365-01-197-1561	146	12
	147	7
5365-01-197-1562	145	8
5365-01-197-1563	145	8
5365-01-197-1564	145	8
5365-01-197-1565	145	8
5340-01-197-1580	130	37
5306-01-197-1598	115	7
	116	19
5306-01-197-1599	91	9
	106	1
	114	15
	116	14
5365-01-197-1631	135	16
5340-01-197-1633	55	17
5310-01-197-2398	91	22
5306-01-197-2531	65	41
	66	46
	85	14
5306-01-197-2532	61	19
	72	2
	140	17
5330-01-197-2591	86	1
5330-01-197-2592	84	9
3110-01-197-2646	127	30
5306-01-197-3556	152	31
5330-01-197-4422	20	3
5306-01-197-4445	128	1
5310-01-197-4491	70	16
3110-01-197-4734	134	18
3110-01-197-5082	127	27
5315-01-197-6264	178	19
5365-01-197-6366	142	11
5315-01-197-6465	181	15
5306-01-197-6578	105	15
5306-01-197-6594	175	10
5340-01-197-7597	77	45
	77	54
	107	13
	121	13
	122	11
5306-01-198-1700	37	2
2930-01-198-2832	110	3
5306-01-198-4146	148	24

STOCK NUMBER	FIG.	ITEM
5306-01-198-4665	151	3
5365-01-198-5543	147	29
3130-01-198-5552	127	60
5306-01-198-6503	91	33
5365-01-198-6557	77	86
5365-01-198-8214	127	55
5365-01-198-8215	127	56
5365-01-198-8216	127	57
5365-01-198-8232	127	20
5340-01-198-8261	120	4
3040-01-198-8727	110	18
3040-01-198-8728	110	19
5365-01-198-8757	131	25
5306-01-199-1228	135	22
3110-01-199-1392	127	16
5315-01-199-2089	148	27
6150-01-199-2521	55	24
3040-01-199-3226	20	13
	36	5
5306-01-199-4344	109	8
5305-01-199-4352	148	4
3040-01-199-7821	110	5
4720-01-200-0815	88	17
5365-01-200-1519	167	1
	170	9
5330-01-200-3967	77	106
5306-01-200-6257	159	8
5305-01-200-6258	86	3
5310-01-200-7005	69	6
	70	18
4710-01-200-9191	78	92
5306-01-201-0289	62	3
3040-01-201-0952	84	19
5340-01-201-0964	76	26
3040-01-201-0965	182	56
3040-01-201-0966	182	52
3040-01-201-0967	182	60
9905-01-201-0974	76	8
9905-01-201-0976	76	3
5315-01-201-0997	109	20
4730-01-201-1001	119	45
6150-01-201-1008	156	14
4820-01-201-1070	54	14
3040-01-201-1076	109	19
3040-01-201-1145	138	18
3040-01-201-1146	181	2
3040-01-201-1147	181	4
5915-01-201-2029	55	10
5915-01-201-2030	55	15
5305-01-201-3790	144	4

CROSS-REFERENCE INDEXES

NATIONAL STOCK NUMBER INDEX

STOCK NUMBER	FIG.	ITEM	STOCK NUMBER	FIG.	ITEM
5305-01-201-3790	146	26	5305-01-206-9676	116	3
3020-01-201-4031	152	12	3020-01-207-1152	182	57
2520-01-201-7876	181	1	5365-01-207-1291	86	31
4820-01-201-7978	84	13	3020-01-207-3769	186	1
3130-01-201-8763	110	11	5310-01-207-7569	73	12
5306-01-201-8790	57	36	5360-01-207-7829	111	9
	59	2	4820-01-207-9221	86	30
5365-01-202-7727	110	7	4730-01-207-9552	77	51
2540-01-202-8232	9	11	3040-01-207-9627	184	1
5305-01-202-8233	86	8	3020-01-208-3397	125	3
5306-01-203-6433	78	59	3120-01-208-5399	86	47
4730-01-203-6941	189	17	3120-01-208-5400	86	34
2520-01-203-9888	125	12	5365-01-208-6855	76	5
2530-01-203-9889	177	16	2530-01-208-7033	86	29
5340-01-204-0375	137	20	2530-01-208-7034	86	22
	138	23	4140-01-209-6010	135	3
2590-01-204-2588	76	25	5340-01-209-7084	86	24
5365-01-204-2592	125	11	5305-01-209-7184	127	53
3110-01-204-3426	127	25	5330-01-209-7295	182	8
5305-01-204-5473	63	52	5365-01-209-7421	65	40
3040-01-204-5560	8	13	4030-01-209-7476	182	28
5310-01-204-6862	153	3	5305-01-210-0770	65	13
2920-01-204-7695	120	18	3110-01-210-0847	86	48
4710-01-204-8143	84	15	3120-01-210-0867	86	16
5365-01-204-8909	74	18	6140-01-210-1964	16	7
5365-01-204-8910	1	48	5306-01-210-2897	54	15
5306-01-205-2798	84	21	5365-01-210-7628	148	28
	104	16	5306-01-210-9420	80	16
5306-01-205-2799	66	12	2540-01-211-6638	1	25
	77	52	5305-01-211-7474	149	11
	175	7	5340-01-212-0433	76	73
5306-01-205-2800	76	11	3040-01-212-2465	135	20
5306-01-205-2801	11	13	2540-01-212-2466	161	18
	152	17	3040-01-212-2498	181	12
5305-01-205-5361	74	2	3020-01-212-2503	131	26
5330-01-205-5886	74	5	5360-01-213-0857	162	6
3110-01-205-8960	74	8	5340-01-213-1353	76	29
5330-01-205-8996	113	10	4730-01-214-1741	189	22
5306-01-205-9150	78	32	4730-01-214-6990	105	12
5330-01-205-9225	73	15	5330-01-215-0114	182	50
5330-01-205-9226	73	7	2590-01-215-6648	66	27
5340-01-205-9260	113	12	2540-01-215-6649	161	31
2540-01-206-3878	161	12	5310-01-216-3677	175	2
2520-01-206-3879	120	9	5340-01-216-5567	58	29
9905-01-206-3994	80	6		165	19
5306-01-206-5451	77	87	2540-01-216-5568	112	7
	142	6	5340-01-216-5570	64	3
	143	9	5340-01-216-5571	80	17
5306-01-206-5452	140	1	5340-01-216-5572	122	6
5310-01-206-6636	86	25	5340-01-216-5573	122	10

CROSS-REFERENCE INDEXES

NATIONAL STOCK NUMBER INDEX

STOCK NUMBER	FIG.	ITEM
4730-01-216-5574	108	2
3040-01-216-5575	116	20
9905-01-216-5583	108	3
2930-01-216-5646	112	9
5340-01-216-5652	58	30
5306-01-216-6605	140	16
2540-01-216-7046	162	13
5340-01-216-7047	162	19
2540-01-216-7048	162	8
2590-01-216-8646	188	10
8140-01-217-1060	66	40
5340-01-217-1073	162	14
5340-01-217-1074	162	24
4710-01-217-2561	104	21
4720-01-217-2828	107	6
9535-01-217-3221	67	3
2540-01-217-3258	64	5
5340-01-217-3259	64	24
5340-01-217-3260	64	15
5340-01-217-3261	64	20
5306-01-217-3262	64	23
6135-01-217-3292	16	17
4820-01-217-3305	170	10
5310-01-217-5206	63	7
5340-01-218-7160	107	15
	108	22
5340-01-218-8562	8	32
5306-01-219-4131	142	1
5306-01-219-5400	142	5
5670-01-219-5864	66	33
3020-01-219-7561	153	1
3040-01-219-7618	153	2
4710-01-219-7917	78	46
4710-01-219-7918	122	26
4710-01-219-7919	122	29
5340-01-219-9427	104	17
5306-01-220-0187	142	4
5330-01-220-2384	95	3
2510-01-220-6378	57	13
	66	20
5340-01-220-6379	65	30
4720-01-220-6650	77	7
4720-01-220-6651	108	7
4720-01-220-6652	122	43
4710-01-220-8406	122	24
4720-01-220-9889	77	1
4720-01-220-9890	122	34
4720-01-221-1449	108	24
4720-01-221-1450	108	21
4720-01-221-1451	122	13
4720-01-221-2067	121	14
4720-01-221-2068	77	48
4720-01-221-5561	122	35
4730-01-221-7325	122	32
4730-01-221-7329	77	6
	108	25
	122	40
5305-01-221-8699	91	6
3110-01-222-2459	145	12
3040-01-222-7586	152	29
2520-01-222-7588	152	19
5120-01-222-7930	188	41
5120-01-222-7931	188	31
5120-01-222-7932	188	28
5120-01-222-7933	188	30
5340-01-222-7934	188	4
5120-01-222-7938	188	1
5120-01-222-7939	188	2
5340-01-222-7997	7	9
2910-01-222-8364	51	15
5340-01-222-8733	66	30
4730-01-223-0527	54	1
4730-01-223-0536	122	21
5365-01-223-6853	173	12
4720-01-223-7658	122	44
5310-01-223-9568	118	5
4010-01-224-1529	66	28
5120-01-224-3063	188	38
5340-01-224-3763	108	16
5340-01-224-6926	BULK	11
5325-01-224-8300	12	10
5325-01-224-8301	16	10
4720-01-224-8713	73	2
2590-01-224-9241	188	13
4730-01-225-6873	77	5
2815-01-225-8385	91	32
2590-01-225-8386	57	26
2590-01-225-8387	76	22
2590-01-226-0545	183	9
2530-01-226-0555	155	1
2590-01-226-0722	183	8
2940-01-226-2773	103	8
2910-01-226-3455	103	19
5306-01-226-4578	64	22
2590-01-226-7373	71	19
2590-01-226-7374	71	13
2590-01-226-7375	71	26
2590-01-226-7376	71	9
2590-01-226-7377	71	22
2510-01-226-7378	64	4

CROSS-REFERENCE INDEXES

NATIONAL STOCK NUMBER INDEX

STOCK NUMBER	FIG.	ITEM
5340-01-226-7379	93	8
5935-01-226-6367	14	12
5360-01-226-9202	170	32
5360-01-226-9204	169	4
5120-01-227-7042	188	32
5120-01-227-7043	188	29
5120-01-227-7044	188	3
5120-01-227-8480	188	8
3040-01-227-8895	138	4
5365-01-228-0730	167	4
	168	3
	171	2
5365-01-228-0731	171	4
5330-01-228-1416	127	51
5120-01-228-3162	188	35
2925-01-228-5800	93	12
2590-01-228-5802	188	12
5340-01-228-5803	65	29
2510-01-228-5805	76	12
4710-01-228-5834	95	2
4710-01-228-5835	95	4
5365-01-229-2064	1	30
5365-01-229-2090	170	35
2930-01-229-3431	99	1
5310-01-229-8042	170	3
5310-01-229-8043	170	4
5315-01-229-9007	188	27
5120-01-229-9134	188	26
5120-01-229-9135	188	40
5306-01-229-9592	57	20
5315-01-229-9703	188	39
5365-01-230-0200	188	7
5120-01-230-1509	188	34
2520-01-230-8802	120	30
5307-01-230-8845	57	11
	66	21
5365-01-230-9909	170	39
5305-01-231-0613	120	27
2930-01-231-0634	113	17
2510-01-231-3821	9	6
5340-01-231-5357	108	12
	121	1
	122	5
5340-01-231-9143	68	8
2510-01-231-9144	68	2
5340-01-232-3913	161	23
4720-01-233-1693	50	11
5315-01-233-9848	64	10
6150-01-234-1617	55	11
2530-01-234-1917	155	2

STOCK NUMBER	FIG.	ITEM
4330-01-234-1939	82	3
5315-01-236-1965	148	15
5305-01-237-2133	63	68
5315-01-237-4938	64	9
5306-01-238-1479	80	3
4710-01-238-1888	48	23
4720-01-238-2316	BULK	13
4730-01-238-6443	77	3
2540-01-239-1662	56	1
2590-01-239-1663	56	5
2590-01-239-1664	57	46
6150-01-239-1719	11	7
5340-01-239-1863	24	11
9515-01-239-1940	7	22
9515-01-239-1941	7	24
2590-01-239-1973	11	8
2590-01-239-1974	11	6
5365-01-241-5977	64	12
5365-01-242-4564	168	1
	170	37
	171	5
4730-01-242-4572	50	15
4730-01-242-4573	50	14
3120-01-242-6253	76	4
3030-01-242-6377	109	31
4720-01-242-7752	2	51
	77	16
	77	71
4720-01-242-7753	2	18
4720-01-242-7754	2	23
4720-01-242-7755	50	16
4720-01-242-7756	50	37
4730-01-243-3538	2	21
	50	10
	54	10
4730-01-243-3539	2	11
	107	29
4730-01-243-3540	2	22
	50	9
	54	9
4720-01-243-6289	50	4
4730-01-243-6319	2	12
	107	30
5310-01-243-9437	152	34
4720-01-244-2447	BULK	19
5340-01-244-5802	55	16
5935-01-244-8171	21	38
2510-01-245-2446	162	21
2590-01-245-2447	163	11
5340-01-245-2494	162	18

CROSS-REFERENCE INDEXES

NATIONAL STOCK NUMBER INDEX

STOCK NUMBER	FIG.	ITEM	STOCK NUMBER	FIG.	ITEM
5340-01-245-2527	137	6	2590-01-252-3374	66	8
5340-01-245-2528	137	3	4720-01-252-8425	189	11
5365-01-245-4119	152	33	7690-01-252-9419	165	5
5365-01-245-4120	152	33	5340-01-252-9793	137	26
2590-01-245-7560	109	30	3010-01-252-9796	165	4
5340-01-245-7599	107	9	2510-01-252-9797	66	37
5340-01-245-7600	107	10	6695-01-252-9819	27	5
4730-01-245-7604	121	6	4720-01-253-3403	54	11
4730-01-245-7605	119	29	4720-01-253-3404	54	6
2590-01-246-0909	65	51	5306-01-253-4427	63	57
5340-01-246-0910	66	11	5306-01-253-4428	66	16
5340-01-246-0916	66	9	5306-01-253-4429	93	5
2990-01-246-0917	104	2	5330-01-254-4385	48	24
2540-01-246-0918	104	5	3120-01-254-4442	62	7
9905-01-246-0925	76	9	2540-01-254-5387	65	46
4720-01-246-0992	189	10	2540-01-254-5388	65	50
2590-01-246-0997	63	26	2540-01-254-5389	65	43
3040-01-246-0998	65	56	2540-01-254-5390	65	42
2530-01-246-1227	136	28	2510-01-254-6512	164	8
5365-01-246-3914	152	33	5340-01-254-6544	159	6
5340-01-246-5830	66	24	5340-01-254-6545	159	10
9905-01-246-6653	26	3	4730-01-254-6548	119	28
5133-01-247-4746	188	43	3040-01-254-6552	58	20
5935-01-247-5770	34	32	4710-01-254-6553	107	21
6620-01-248-0358	28	14	5340-01-254-6556	48	25
6685-01-248-1706	28	17	9515-01-254-6561	65	17
6685-01-248-1707	28	15	9515-01-254-6562	65	18
7690-01-248-4614	165	15	9515-01-254-6563	65	9
7690-01-248-4615	165	8	2510-01-254-6570	65	54
7690-01-248-4616	165	27	2540-01-254-6571	65	26
7690-01-248-4617	165	14	2540-01-254-6573	65	21
7690-01-248-4618	163	12	2540-01-254-6574	164	12
7690-01-248-4619	163	13	2540-01-254-6575	165	1
4720-01-248-8819	121	7	6150-01-254-6577	159	23
4720-01-248-8820	122	2	5995-01-254-6579	13	22
4730-01-248-9449	121	5	2590-01-254-6580	33	1
5365-01-248-9632	66	5	5999-01-254-6581	13	24
5340-01-248-9633	66	13	3040-01-255-1605	138	20
4720-01-249-1383	88	11	2540-01-255-5992	162	20
4720-01-249-2025	88	13	8120-01-255-7885	81	1
4720-01-249-2026	77	145	2510-01-256-0039	66	4
	88	10	5340-01-256-0981	165	28
4720-01-249-2027	107	19	5360-01-257-9244	62	6
5340-01-249-4377	66	17	2510-01-262-4982	99	17
5365-01-249-9707	189	16	4710-01-262-4995	98	3
5340-01-250-5688	163	1	4710-01-262-4996	98	6
5365-01-251-2034	189	19	4710-01-262-4999	98	11
7690-01-251-8273	163	8	4710-01-262-5000	98	10
2510-01-252-0283	66	42	5133-01-263-2299	194	18
2590-01-252-0285	159	9	3120-01-264-6005	57	43

CROSS-REFERENCE INDEXES

NATIONAL STOCK NUMBER INDEX

STOCK NUMBER	FIG.	ITEM
3120-01-264-6006	57	52
3040-01-264-9691	137	9
4810-01-267-0702	183	31
6685-01-268-6735	81	18
5305-01-269-7504	183	1
5340-01-270-1802	113	16
4730-01-270-7650	189	26
5340-01-271-0936	165	9
5365-01-271-1809	151	12
5305-01-271-3248	92	4
5340-01-273-8821	57	56
2510-01-274-0995	63	62
2540-01-274-0996	63	27
2540-01-274-0998	62	15
2540-01-274-1103	63	8
2540-01-274-1104	63	21
2540-01-274-1105	63	11
2540-01-274-1166	63	28
2540-01-274-1167	62	14
2510-01-274-1176	63	40
5360-01-274-1179	63	4
2510-01-275-9225	63	6
5430-01-278-5727	3	1
5340-01-278-7961	81	2
2590-01-278-7962	81	11
5310-01-278-7963	81	8
5310-01-278-7964	81	9
5340-01-279-0983	91	20
2540-01-279-1013	57	32
	69	1
2990-01-279-1014	91	28
2590-01-279-9942	63	25
2510-01-281-2871	63	58
3040-01-281-2915	63	41
5340-01-281-2918	63	3
5306-01-281-7154	63	50
5306-01-281-7155	62	1
4730-01-281-9381	84	11
5306-01-282-1519	82	17
5365-01-282-3638	63	24
5365-01-284-8136	63	15
5365-01-284-8137	63	15
5340-01-284-8141	63	61
5340-01-284-8142	63	61
5340-01-284-8143	63	61
5340-01-284-8285	71	40
5340-01-284-8286	116	33
5340-01-284-9894	116	32
5340-01-285-5586	71	37
5340-01-285-7868	71	38
5340-01-286-7321	116	34
5340-01-286-9807	163	19
5340-01-286-9808	163	18
5306-01-287-2259	69	7
4720-01-289-8213	77	130
4720-01-289-8214	119	24
4720-01-289-8215	119	30
4720-01-289-8216	119	11
4720-01-289-8217	119	50
4720-01-289-8218	119	36
4720-01-289-8219	119	48
4720-01-289-8220	119	32
4720-01-289-8221	119	42
4720-01-289-8222	119	33
4720-01-289-8223	119	43
4720-01-289-8224	119	35
4720-01-289-8225	119	51
4720-01-289-8226	77	136
4720-01-289-8227	77	149
4720-01-289-8228	77	92
4720-01-289-8229	77	116
4720-01-289-8230	77	84
4720-01-289-8231	77	97
4720-01-289-8232	77	25
4720-01-289-8233	77	24
4720-01-289-8234	150	9
4720-01-289-8235	150	7
4720-01-289-8236	139	3
4720-01-289-8237	150	10
4720-01-289-8238	114	4
4720-01-289-8239	107	7
2510-01-290-3020	10	17
2510-01-290-3023	9	4
2510-01-291-2963	10	24
2510-01-291-2992	9	1
2520-01-291-2996	11	1
5340-01-292-3026	65	12
9535-01-292-3027	67	7
9535-01-292-3028	67	6
9535-01-292-3029	67	8
5340-01-292-3241	65	55
5340-01-292-3242	65	58
4720-01-292-6540	77	100
4720-01-292-6541	77	101
2540-01-292-9059	66	51
2540-01-293-3374	65	31
4720-01-296-2975	122	60
4720-01-296-2976	180	11
4720-01-296-2977	150	4
4720-01-296-2978	119	37

CROSS-REFERENCE INDEXES

NATIONAL STOCK NUMBER INDEX

STOCK NUMBER	FIG.	ITEM
4720-01-296-8451	119	13
2815-01-297-5634	183	16
2540-01-298-3975	189	29
2540-01-298-3982	159	12
5140-01-298-3983	192	24
2540-01-298-8399	65	26
9905-01-299-8898	157	12
4720-01-299-8899	77	144
5120-01-301-5783	188	16
5120-01-302-4387	188	17
5340-01-303-1073	91	29
5140-01-305-3428	191	10
5140-01-305-3429	191	11
4720-01-306-5704	107	3
4720-01-306-7492	108	20
5315-01-307-5942	63	22
5330-01-308-0150	KIT	
5360-01-309-5091	181	5
3120-01-310-2402	148	17
9530-01-311-1587	165	13
2540-01-312-8366	165	22
4810-01-313-6320	89	1
2540-01-313-7821	23	9
3950-01-313-7822	187	1
4330-01-313-7825	123	4
4810-01-314-6238	89	6
2540-01-314-8046	7	12
4710-01-316-4922	78	17
4710-01-316-4923	78	18
4710-01-316-7426	78	3
3040-01-326-7771	63	47
3040-01-326-7772	145	4
9530-01-326-7774	8	9
5340-01-326-7775	63	31
5340-01-326-7776	122	22
5340-01-326-8177	63	34
2590-01-326-8178	189	30
4730-01-329-4994	189	14
2510-01-330-8087	63	63
2540-01-330-8831	68	9
2540-01-330-8832	68	7

CROSS-REFERENCE INDEXES

PART NUMBER INDEX

CAGEC	PART NUMBER	STOCK NUMBER	FIG.	ITEM
88042	AAF216CP20	3110-00-100-6153	120	22
46717	AC-1-310	4730-01-156-4835	77	23
			78	39
			88	5
88044	AN316-8L	5310-00-167-1303	91	19
55719	AN8506-10	5120-00-595-8213	192	8
88044	AN914-1S	4730-00-203-0920	36	8
88044	AN915-1J	4730-00-720-2038	49	3
88044	AN916-3	4730-00-231-5623	54	17
88044	AN924-10	5310-00-145-1650	173	11
88044	AN960-10	5310-00-167-0818	110	17
88044	AN960-416	5310-00-141-1795	64	2
96906	AN960-616		56	2
81352	AN960XC1216	5310-01-064-3621	86	2
88044	AN960XC1216L	5310-01-112-6120	109	14
			155	8
88044	AN960XC816	5310-00-151-5572	79	7
88044	AN970-8	5310-00-167-0770	91	14
55719	APS357	5120-01-224-3063	188	38
94222	A1-99-134-70	5340-01-183-2626	66	15
02892	A116X13	5305-01-130-7925	117	2
98441	A1268-1	4720-01-179-9151	77	39
98441	A1269-1	4720-01-179-1323	77	31
98441	A1270-1	4720-01-181-6166	77	112
98441	A1271-2	4720-01-299-8859	77	144
00736	A15621	5310-00-608-1053	118	6
00736	A15621-1	5330-00-599-1629	118	7
00736	A16367-207	5330-00-251-9355	118	10
02892	A252X54	5310-01-129-8972	117	3
02892	A300X1	4730-01-128-3957	117	13
02892	A340X47	3110-01-129-2512	117	6
02892	A361X93		117	17
02892	A515X27	5365-01-194-5266	117	16
02892	A553X5	5315-01-130-1138	117	5
84561	A6R0578B53Q	2590-01-170-5026	80	4
53964	A618021		53	4
53964	A619025		53	5
02892	A791X73		117	12
02892	A907X62		117	15
02892	A908X34		117	8
02892	A991X38		117	7
01226	BH58N		76	21
05341	BS308	5310-01-194-3122	110	10
24617	BU1211L	3110-00-155-6565	127	4
55719	B129A	5140-00-277-8835	194	30
00736	B16367-158		118	9
75370	B2732		169	27
			172	14
			175	11
51829	B32-80-7607		57	22
51588	B32L	3120-00-808-2171	156	21
81361	B5-19-1663	6150-01-005-4773		

CROSS-REFERENCE INDEXES

PART NUMBER INDEX

CAGEC	PART NUMBER	STOCK NUMBER	FIG.	ITEM
81361	B5-19-1676-2	4730-00-808-5089	156	18
81361	B5-19-1768	6150-01-032-4556	156	28
81361	B5-19-1829	4240-00-007-9453	156	11
81361	B5-19-1831	5340-00-595-5208	156	13
80201	B72-80-4450	5330-01-169-2461	152	39
57371	C-904-19.5 INCH	4210-01-182-7420	48	27
71468	CA3100R32A10S-BO 5F80	5935-01-102-7124	14	6
81833	C100-228650		89	5
82484	C1100-16	2540-01-183-6840	9	3
82484	C1421-1	5310-00-255-4371	9	13
07860	C21452	2590-00-473-6331	7	16
78553	C30584-3816	5310-01-189-8467	55	2
79470	C3109X6X2	4730-00-873-0110	188	14
16003	C43974	4010-00-585-2108	BULK	3
81361	C5-19-1662	5340-00-806-0022	158	6
81361	C5-19-1757	1015-01-027-0980	156	25
81361	C5-19-1773	4240-00-018-3079	158	3
81361	C5-19-1827	4240-00-763-2465	158	2
81361	C5-19-1893-30	4720-00-004-8249	156	19
81361	C5-19-2267	4240-00-289-7978	158	4
81361	C5-19-853	4240-00-368-6291	158	5
81361	C5-19-876-1	4720-00-060-2732	156	16
79470	C5105X6	4730-00-203-3831	189	15
57371	C904-14	4710-01-180-5555	48	15
57371	C904-21.5	4210-01-109-7949	48	29
55719	DBC1/2	5133-01-021-9308	194	29
55719	DBC11/32	5133-01-127-6865	194	19
55719	DBC21/64	5133-01-263-2299	194	18
55719	DBC229	5133-01-247-4746	188	43
55719	DBC31/64	5133-01-088-1690	194	28
77998	DREM-14	3120-01-188-5123	140	12
03018	D1420	5310-00-247-3360	23	5
			28	18
81361	D5-19-1754	4240-00-565-6059	156	15
81361	D5-19-1772	4240-00-868-7906	158	1
18265	EGB14-0162		103	18
19728	E019522	6220-01-093-4439	44	10
81361	E5-19-1782	4540-00-807-6856	157	1
03914	FA10B	5120-00-683-8602	190	7
55719	FA12A	5120-00-596-1199	190	8
55719	FA4.5A	5120-00-935-7474	190	2
55719	FA4A	5120-00-516-4979	190	1
55719	FA5A	5120-00-969-0071	190	3
01276	FA5783GGG1627	4720-01-179-2929	2	39
55719	FA6A	5120-00-683-8597	190	4
55719	FA7A	5120-00-596-8511	190	5
55719	FA8A	5120-00-596-8508	190	6
01276	FB9986-01	4720-01-292-6540	77	100
01276	FB9986-02	4720-01-292-6541	77	101
K5773	FC18	5120-00-184-8397	192	1

CROSS-REFERENCE INDEXES

PART NUMBER INDEX

CAGEC	PART NUMBER	STOCK NUMBER	FIG.	ITEM
K5773	FC20	5120-00-184-8398	192	2
K5773	FC22	5120-00-236-2261	192	3
K5773	FC24	5120-00-184-8400	192	4
K5773	FC26	5120-00-184-8401	192	5
55719	FC28	5120-00-541-4071	192	6
K5773	FC30	5120-00-184-8403	192	7
55719	FC34	5120-00-184-8405	192	9
55719	FC36	5120-00-517-7021	192	10
55719	FC38	5120-00-184-8407	192	11
K5773	FC40	5120-00-293-2567	192	12
55719	FC42	5120-00-184-8409	192	13
55719	FC44	5120-00-184-8410	192	14
55719	FC48	5120-00-184-8412	192	15
55719	FC52	5120-00-184-8414	192	16
55719	FC54	5120-00-184-8415	192	17
55719	FC56	5120-00-184-8416	192	18
55719	FC60	5120-00-184-8418	192	19
55719	FC64	5120-00-184-8420	192	20
55719	FC68	5120-00-184-8422	192	21
55719	FC72	5120-00-184-8424	192	22
55719	FC80	5120-00-184-8428	192	23
55719	GAX-1	5120-00-240-8702	188	19
08832	GS5	4940-00-595-5720	188	5
38443	G310M-T9LR	3110-01-197-4734	134	18
64294	HX365-3	4320-01-193-3605	74	1
97111	H2-62SL-T6	4730-01-254-6548	119	28
97111	H2-63-T6	4730-01-245-7605	119	29
97111	H3-62SL-T8	4730-01-243-6319	2	12
			107	30
97111	H3-63-T8	4730-01-243-3539	2	11
			107	29
97111	H4-62SL-T10	4730-01-243-3538	2	21
			50	10
			54	10
97111	H4-63-T10	4730-01-243-3540	2	22
			50	9
			54	9
05842	H425.394		86	6
05842	H426.394		86	5
05842	H431.520	3110-00-227-3245	86	10
97111	H6-62SL-T12	4730-01-242-4572	50	15
97111	H6-63-T12	4730-01-242-4573	50	14
05842	H613.183	5360-01-186-7456	86	21
97111	H8-62SL-T16	4730-01-248-9449	121	5
97111	H8-63-T16	4730-01-245-7604	121	6
71176	IDP1-5-8		109	22
76005	J-11729-127	5340-01-159-6456	109	29
76005	J-3830-6	3120-01-182-8955	91	16
K5547	J-38544		188	42
57517	JOC1888	6120-01-255-7885	81	1
81343	J514 2-2 140139C A		119	46

CROSS-REFERENCE INDEXES

PART NUMBER INDEX

CAGEC	PART NUMBER	STOCK NUMBER	FIG.	ITEM
76005	J6198-3	5340-00-758-0181	91	12
05842	KP4033-9012	4320-01-176-5442	KIT	
82484	K132-3	4820-01-179-6307	2	5
83324	K4-621-621L	5180-00-157-1105	188	33
81349	LC12GN2	6210-00-079-8943	30	16
60038	LL225710	3110-00-952-2892	116	25
60038	LL225749	3110-00-952-2881	116	26
60038	L319210	3110-00-155-7770	127	59
60038	L319249	3110-00-155-7760	127	58
46717	L6451-101	5315-00-187-9551	69	4
			70	3
64294	MC3F1A19D15B	4320-01-186-3334	182	18
81349	MILF21840TYPEII, CL1,2.00W,GRN		BULK	9
81349	MI3486/1-5AR		41	7
18265	MJM09-0514	2990-01-192-4665	104	11
08162	MOJ5309	3110-00-926-4604	152	27
96906	MS15001-1	4730-00-050-4203	63	67
			70	11
			181	11
96906	MS15003-1	4730-00-050-4208	57	23
			58	10
			60	13
			60	19
			61	10
			175	8
96906	MS15003-6	4730-00-172-0034	177	10
96906	MS15570-1251	6240-00-019-0877	45	45
			46	10
96906	MS15570-623	6240-00-019-3093	46	6
			47	22
96906	MS15795-820	5310-00-614-3505	93	3
96906	MS15795-908	5310-00-045-5207	15	6
96906	MS16228-6C	5310-00-241-6640	109	17
96906	MS16555-132	5315-00-478-0256	151	10
			151	20
96906	MS16555-61	5315-00-819-6282	63	33
96906	MS16562-253	5315-00-058-9808	120	26
96906	MS16562-30	5315-00-835-1240	182	22
96906	MS16562-39	5315-00-844-6796	145	17
			145	29
96906	MS16562-50	5315-00-814-3531	45	44
96906	MS16562-52	5315-00-836-9628	109	18
96906	MS16562-56	5315-00-866-3952	64	6
96906	MS16562-62	5315-00-844-3662	169	25
96906	MS16562-67	5315-00-844-3664	181	17
96906	MS16624-1043	5365-00-803-7315	143	39
96906	MS16624-1050	5365-00-803-7301	161	26
96906	MS16624-1075	5365-00-803-7303	1	29
			109	12
96906	MS16624-1100	5365-00-530-7968	182	19

CROSS-REFERENCE INDEXES

PART NUMBER INDEX

CAGEC	PART NUMBER	STOCK NUMBER	FIG.	ITEM
96906	MS16624-1156	5365-00-803-7304	135	11
96906	MS16624-1215	5365-00-282-1831	127	3
			132	14
			133	14
96906	MS16624-1231	5365-00-803-9971	135	13
96906	MS16624-1262	5365-00-200-8772	127	35
96906	MS16624-1325	5365-00-809-1518	127	38
96906	MS16624-4087	5365-00-514-0393	156	12
96906	MS16625-1087	5365-00-804-9739	182	62
96906	MS16625-1354	5365-00-260-4875	127	5
			134	5
96906	MS16625-1393	5365-00-260-4883	116	9
96906	MS16625-1800	5365-00-854-6720	182	46
96906	MS16626-1106	5365-01-024-8998	76	37
96906	MS16626-1150	5365-00-787-2192	116	6
96906	MS16627-1112	5365-00-558-8482	130	27
			130	47
96906	MS16632-1031	5365-00-663-1245	148	7
96906	MS16632-4068	5365-01-282-3638	63	24
96906	MS16655-1		45	18
96906	MS16655-2	5935-00-570-5859	45	19
96906	MS16995-18	5305-00-959-1082	35	4
96906	MS16997-100	5305-00-978-9355	51	12
96906	MS16997-190L	5305-01-200-6258	86	3
96906	MS16997-31L	5305-01-134-5726	159	22
96906	MS16997-60L	5306-01-122-5464	64	1
96906	MS16997-99	5305-00-978-9394	63	30
96906	MS16998-76	5305-00-983-7450	169	34
96906	MS16998-96	5305-00-983-8074	182	47
96906	MS17131-32	3110-00-902-3772	120	12
96906	MS17133-24	3110-00-227-4788	182	45
96906	MS171534	5315-01-007-8299	161	30
96906	MS171537	5315-00-297-1745	143	45
96906	MS171592	5315-01-135-0181	162	7
96906	MS17165-4578	6240-00-643-0687	44	3
96906	MS17796-63	3120-00-763-8930	164	3
96906	MS17829-12C	5310-00-519-6630	136	14
96906	MS17829-14C	5310-00-211-9271	136	7
96906	MS17829-4C	5310-00-483-8792	20	10
			54	20
			77	77
			82	20
96906	MS17829-4F	5310-00-483-8791	1	5
			161	5
96906	MS17829-5C	5310-00-245-3424	5	5
			8	4
			76	28
			161	20
96906	MS17829-5F	5310-00-518-5680	161	1
96906	MS17829-6C	5310-00-483-8790	27	3
			51	7

CROSS-REFERENCE INDEXES

PART NUMBER INDEX

CAGEC	PART NUMBER	STOCK NUMBER	FIG.	ITEM
96906	MS17829-6C	5310-00-483-8750	61	20
			77	32
			80	1
			83	16
			83	18
			87	4
			136	19
			137	13
			176	4
96906	MS17829-7F	5310-00-245-3421	161	16
96906	MS17829-8C	5310-00-595-7421	57	6
			58	5
			60	21
			84	26
			119	9
96906	MS17829-8F	5310-00-068-8067	1	42
			112	5
96906	MS18003-4811	6240-00-368-4572	45	17
96906	MS18153-88	5305-00-914-6133	161	13
96906	MS18154-58	5305-00-115-9526	23	4
			27	2
			30	21
			45	25
			54	22
			56	3
			58	26
			105	9
			182	26
96906	MS18154-59	5305-01-010-2362	96	10
96906	MS18154-60	5305-00-942-2156	9	22
			27	4
			44	8
			54	21
			57	7
			71	17
			104	9
			164	6
			182	2
			182	25
			187	3
96906	MS19061-20015	3110-00-887-5524	143	48
96906	MS19061-20019	3110-00-948-9757	130	40
96906	MS19061-20021	3110-01-222-2459	145	12
96906	MS19065-30	3110-00-180-7117	184	7
96906	MS19068-082	5310-00-543-4863	110	14
96906	MS19068-092	5310-00-225-8327	110	1
96906	MS19070-082	5310-00-682-5444	110	13
96906	MS19070-092	5310-00-205-8249	110	2
96906	MS19077-11	3110-00-155-6560	127	7
96906	MS19081-105	3110-00-227-2559	175	12
96906	MS19081-155	3110-00-100-5499	147	26

CROSS-REFERENCE INDEXES

PART NUMBER INDEX

CAGEC	PART NUMBER	STOCK NUMBER	FIG.	ITEM
96906	MS19081-67	3110-00-100-5989	116	28
96906	MS19081-86	3110-00-100-5937	175	1
96906	MS20066-100	5315-00-730-4453	76	56
96906	MS20066-211	5315-00-060-4324	109	35
96906	MS20066-227	5315-00-729-6987	182	16
96906	MS20066-252	5315-00-990-2630	62	13
96906	MS20066-280	5315-01-026-4522	110	4
96906	MS20066-348	5315-01-110-4790	109	34
96906	MS20392-3C25	5315-00-081-7875	76	75
96906	MS20392-3C27	5315-00-081-7876	182	40
96906	MS20392-3C43	5315-00-811-9106	48	30
96906	MS20392-3C45	5315-00-811-9107	63	49
96906	MS20392-5C39	5315-00-825-8350	63	44
96906	MS20392-5C43	5315-00-954-1289	65	52
			66	34
96906	MS20392-5C55	5315-00-957-0764	182	43
96906	MS20392-5C69	5315-00-957-9386	63	37
96906	MS20392-7C35	5315-00-081-7041	109	26
96906	MS20392-7C75	5315-00-904-1643	84	25
96906	MS20392-7C87	5315-00-957-0756	161	36
96906	MS20613-4P4	5320-00-994-7076	45	27
96906	MS20659-101	5940-00-113-3137	14	8
96906	MS20659-102	5940-00-113-3138	34	25
96906	MS20659-142	5940-00-114-1315	34	7
96906	MS20659-164	5940-00-113-3148	34	9
96906	MS20813-1	1650-00-222-4525	81	12
			173	9
96906	MS20913-8S	4730-00-221-2141	150	1
96906	MS20995C47	9505-00-555-8648	BULK	41
96906	MS20995C47AR		127	22
			135	7
96906	MS20995F91AR		173	3
96906	MS21044N4	5310-00-877-5796	165	10
96906	MS21044N5	5310-00-088-0553	48	37
96906	MS21045C4	5310-00-982-4988	58	11
96906	MS21083C10	5310-00-050-9372	73	11
96906	MS21083N04	5310-00-925-9645	13	7
96906	MS21083N06	5310-00-905-8451	13	17
96906	MS21083N08	5310-00-941-6019	13	25
			24	23
96906	MS21083N10	5310-00-925-9642	1	35
			76	54
96906	MS21083N3	5310-00-902-6676	15	16
96906	MS21083N4	5310-00-903-8282	55	22
			137	2
96906	MS21083N5	5310-00-660-3381	1	10
			137	18
			138	19
96906	MS21083N8	5310-00-902-9369	1	40
			136	1
			137	10

CROSS-REFERENCE INDEXES

PART NUMBER INDEX

CAGEC	PART NUMBER	STOCK NUMBER	FIG.	ITEM
96906	MS21098-76	5306-01-195-5809	174	6
96906	MS21245L10	5310-00-449-2381	93	2
96906	MS21251A8L	5340-00-435-9372	8	15
96906	MS21266-5N	5325-00-783-4754	11	17
96906	MS21301-35	5305-01-221-8699	91	6
96906	MS21316-56	5305-00-078-7039	10	18
96906	MS21318-13	5305-00-253-5609	73	17
96906	MS21318-14	5305-00-175-3230	82	4
			111	6
96906	MS21318-2	5305-00-253-5604	110	20
96906	MS21318-20	5305-00-253-5614	76	7
96906	MS21318-21	5305-00-253-5615	6	6
			26	5
			143	29
			146	5
96906	MS21318-47	5305-00-253-5626	70	15
96906	MS21333-100	5340-00-809-1492	38	4
			39	3
			48	18
			159	14
96906	MS21333-102	5340-00-984-8540	21	16
			159	5
96906	MS21333-105	5340-00-809-1494	77	76
96906	MS21333-106	5340-00-984-8541	159	16
96906	MS21333-111	5340-00-057-3037	34	18
96906	MS21333-114	5340-00-057-3052	48	40
96906	MS21333-117	5340-00-057-3026	18	22
			34	19
			105	7
96906	MS21333-121	5340-00-954-6014	18	29
96906	MS21333-123	5340-00-989-1771	21	43
			119	25
96906	MS21333-125	5340-00-725-5280	11	11
			34	28
			150	12
96906	MS21333-126	5340-00-053-8994	77	134
96906	MS21333-127	5340-00-833-3049	34	14
			77	135
96906	MS21333-128	5340-00-702-2848	107	26
96906	MS21333-13	5340-00-225-8313	40	4
96906	MS21333-16	5340-00-177-3711	103	28
96906	MS21333-65	5340-00-905-0790	12	5
			18	24
			21	41
96906	MS21333-67	5340-00-079-7837	21	34
96906	MS21333-69	5340-00-764-7051	18	28
			21	32
96906	MS21333-71	5340-00-057-2904	18	27
96906	MS21333-73	5340-00-057-2906	139	11
96906	MS21333-74	5340-00-989-9222	2	40
96906	MS21333-75	5340-00-050-2740	2	42

CROSS-REFERENCE INDEXES

PART NUMBER INDEX

CAGEC	PART NUMBER	STOCK NUMBER	FIG.	ITEM
96906	MS21333-75	5340-00-050-2740	11	14
			40	5
			50	3
			119	47
96906	MS21333-77	5340-00-922-6300	21	12
96906	MS21333-96	5340-00-088-1255	156	24
96906	MS21333-97	5340-00-080-9853	156	22
96906	MS21333-98	5340-00-809-1490	48	6
96906	MS21334-31	5340-00-929-1794	18	25
96906	MS21334-32	5340-00-921-6993	2	44
96906	MS21334-33		21	13
96906	MS21334-34	5340-00-731-9611	21	14
96906	MS21920-41	4730-00-950-6134	78	13
96906	MS21920-50		103	1
96906	MS21920-53	4730-00-834-1139	103	4
96906	MS24140-D1	5945-00-754-9484	35	6
96906	MS24149D1	5945-00-225-8692	30	10
96906	MS24391-4	5365-00-805-1403	80	14
96906	MS24397-21	4730-01-192-4417	77	44
96906	MS24399-19	4730-00-805-5094	189	21
96906	MS24523-29	5930-00-683-1627	13	3
96906	MS24524-21	5930-00-655-4248	24	25
96906	MS24532-2 REV G	6625-01-086-9580	24	7
96906	MS24537-1	6685-00-814-5271	31	5
96906	MS24539	6620-00-993-5546	36	3
96906	MS24543-2	6625-00-936-2139	28	16
96906	MS24544-2	6680-00-933-3600	24	8
96906	MS24585-1363	5360-01-213-0857	162	6
96906	MS24586-263	5360-01-178-7469	1	6
96906	MS24593-4	4820-00-853-6864	77	138
96906	MS24593-8	4820-00-045-7415	77	37
			189	27
96906	MS24629-44	5305-00-052-6915	165	21
96906	MS24629-45	5305-00-855-0958	58	28
96906	MS24629-56	5305-00-052-6920	159	13
96906	MS24665-132	5315-00-839-2325	48	32
			76	74
			120	6
			165	26
			182	38
96906	MS24665-151	5315-00-815-1405	63	39
96906	MS24665-281	5315-00-839-2326	1	32
			138	15
96906	MS24665-283	5315-00-842-3044	76	45
			84	24
			109	11
96906	MS24665-285	5315-00-005-0442	64	14
			161	24
			182	42
			182	66
96906	MS24665-300	5315-00-234-1863	63	46

CROSS-REFERENCE INDEXES

PART NUMBER INDEX

CAGEC	PART NUMBER	STOCK NUMBER	FIG.	ITEM
96906	MS24665-353	5315-00-839-5822	8	6
			178	14
96906	MS24665-359	5315-00-013-7214	70	7
96906	MS24665-372	5315-00-059-0491	63	13
96906	MS24665-497	5315-00-013-7258	62	9
96906	MS24665-501	5315-00-043-1782	175	3
96906	MS24665-631	5315-00-597-7399	70	13
96906	MS24667-29L	5305-01-176-0883	71	6
96906	MS24667-51	5305-00-900-4614	169	17
96906	MS24667-52L	5305-01-197-1368	68	15
			162	17
96906	MS24667-56	5305-01-126-2322	65	28
96906	MS24667-63L	5305-01-206-9676	116	3
96906	MS24667-76	5305-00-052-2234	57	55
96906	MS25036-114	5940-00-113-9826	12	2
96906	MS25082-10	5310-00-721-8000	48	10
96906	MS25231-1819	6240-00-155-8707	28	11
			28	13
96906	MS25231-1829	6240-00-266-9940	25	2
			25	9
			25	13
			28	7
96906	MS25237-327	6240-00-155-7836	30	15
96906	MS25251-12	5935-00-565-9503	30	29
96906	MS25251-16	5935-00-823-5322	22	1
96906	MS27144-2	5935-00-115-2307	39	6
96906	MS27145-1	5935-00-767-7936	21	35
96906	MS27147-1	5935-00-900-6281	36	11
			156	7
96906	MS27148-1	5999-00-925-6495	24	19
96906	MS27148-2	5999-00-057-2929	18	8
			18	10
			21	20
			30	28
			41	9
			42	1
			46	1
			55	29
			120	34
			157	5
96906	MS27148-3	5999-00-926-3144	40	10
96906	MS27151-28	5310-00-985-0782	48	11
96906	MS27183-10	5310-00-809-4058	2	34
			16	11
			20	18
			23	6
			28	19
			32	2
			43	14
			48	8
			58	3

CROSS-REFERENCE INDEXES

PART NUMBER INDEX

CAGEC	PART NUMBER	STOCK NUMBER	FIG.	ITEM
96906	MS27183-10	5310-00-809-4058	63	48
			65	2
			71	3
			77	72
			78	6
			82	2
			82	2
			84	23
			107	5
			119	40
			156	2
			161	6
			163	10
			164	9
			165	6
			182	39
96906	MS27183-12	5310-00-081-4219	1	51
			4	3
			5	4
			8	3
			48	36
			63	19
			76	24
			77	88
			104	3
			105	16
			108	4
			119	4
			137	1
			142	2
			146	9
			161	19
			165	24
			178	6
96906	MS27183-14	5310-00-080-6004	1	13
			7	15
			9	21
			11	12
			16	9
			23	2
			30	19
			51	3
			53	2
			54	24
			57	59
			60	23
			63	38
			64	11
			65	19
			66	2
			67	2

CROSS-REFERENCE INDEXES

PART NUMBER INDEX

CAGEC	PART NUMBER	STOCK NUMBER	FIG.	ITEM
96906	MS27183-14	5310-00-080-6004	71	15
			72	6
			76	17
			77	58
			77	65
			79	2
			80	2
			82	19
			83	19
			84	20
			87	5
			91	2
			93	7
			96	6
			101	1
			104	7
			109	5
			119	2
			136	16
			137	23
			138	3
			152	37
			156	4
			161	34
			162	2
			164	4
			175	6
			176	3
			181	7
96906	MS27183-15	5310-00-809-4061	16	4
			58	16
			78	35
			118	2
			123	2
96906	MS27183-16	5310-00-809-4085	8	11
			91	10
			93	6
			99	18
			103	5
			106	2
			114	16
			115	2
			116	13
			151	2
			161	15
96906	MS27183-18	5310-00-809-5558	7	3
			16	15
			57	48
			58	6
			60	15
			62	2

CROSS-REFERENCE INDEXES

PART NUMBER INDEX

CAGEC	PART NUMBER	STOCK NUMBER	FIG.	ITEM
96906	MS27183-18	5310-00-809-5558	63	12
			64	16
			65	6
			66	39
			68	12
			79	6
			80	15
			84	27
			85	15
			87	2
			91	5
			109	1
			112	4
			117	19
			119	8
			136	26
			159	3
			161	25
			164	2
			165	3
			180	3
96906	MS27183-21	5310-00-823-8803	44	5
			72	3
			76	53
			140	2
			178	3
			178	15
96906	MS27183-22	5310-00-951-7209	163	15
96906	MS27183-23	5310-00-809-8533	1	31
			57	38
			59	3
			91	26
			124	1
			140	15
96906	MS27183-25	5310-00-809-8540	9	23
96906	MS27183-27	5310-00-809-8541	57	12
			66	19
96906	MS27183-42	5310-00-014-5850	8	29
			13	18
			15	15
			165	20
96906	MS27183-8	5310-00-809-8546	51	17
96906	MS27183-9	5310-00-823-8804	9	18
			54	19
			120	7
96906	MS27240-1	5930-00-972-3314	30	34
96906	MS27769C2	4730-00-188-3504	146	29
96906	MS27769C3	4730-00-188-3505	148	66
96906	MS27769C4	4730-00-188-3506	148	65
96906	MS27769C5	4730-00-188-3507	146	4
96906	MS27952-32	5310-01-109-6746	8	16

CROSS-REFERENCE INDEXES

PART NUMBER INDEX

CAGEC	PART NUMBER	STOCK NUMBER	FIG.	ITEM
96906	MS28774-012	5330-00-543-7090	170	21
96906	MS28774-111	5330-00-582-2113	170	12
96906	MS28774-113	5330-00-543-7085	170	7
96906	MS28774-115	5330-00-801-3440	170	28
96906	MS28774-228		82	13
96906	MS28775-012	5330-00-584-0265	170	20
96906	MS28775-015	5330-00-618-5361	81	10
96906	MS28775-017		179	6
96906	MS28775-018	5330-00-618-0799	81	6
96906	MS28775-025		179	10
96906	MS28775-111	5330-00-579-8108	143	40
96906	MS28775-112	5330-00-599-2934	170	19
			182	33
96906	MS28775-113	5330-00-582-2855	120	24
			130	30
			169	20
			172	24
96906	MS28775-115	5330-00-579-7916	170	29
96906	MS28775-121		60	8
			177	9
96906	MS28775-136	5330-00-818-4591	84	7
96906	MS28775-149	5330-00-882-4963	169	30
			172	17
96906	MS28775-210	5330-00-292-0570	143	46
			152	43
96906	MS28775-214		82	14
		5330-00-579-3163	145	5
96906	MS28775-218		179	1
96906	MS28775-219	5330-00-579-7925	77	60
			122	54
96906	MS28775-222	5330-00-297-9990	122	46
96906	MS28775-224		61	8
96906	MS28775-225	5330-00-579-7927	84	12
			121	10
			122	47
96906	MS28775-228		82	12
		5330-00-807-8993	116	16
			128	14
96906	MS28775-242	5330-00-579-6860	182	31
96906	MS28775-258	5330-01-114-9226	116	11
			144	14
96906	MS28775-259	5330-01-063-8978	144	1
96906	MS28775-261	5330-01-106-7286	135	19
96906	MS28775-263	5330-00-882-5029	152	35
96906	MS28775-264	5330-01-043-7758	182	9
96906	MS28775-269	5330-01-019-2450	116	23
			147	28
96906	MS28775-271	5330-01-105-9156	148	39
96906	MS28775-272	5330-01-117-8833	116	29
96906	MS28775-336		177	2
96906	MS28775-342		60	2

CROSS-REFERENCE INDEXES

PART NUMBER INDEX

CAGEC	PART NUMBER	STOCK NUMBER	FIG.	ITEM
96906	MS28775-342		61	2
96906	MS28775-387	5330-01-165-1343	151	11
96906	MS28775-427		174	3
96906	MS28777-5	5310-00-684-2731	81	16
96906	MS28778-10	5330-00-285-9842	2	20
			50	8
			54	8
			77	29
			78	14
			88	23
			169	5
			170	2
96906	MS28778-12	5330-00-251-8839	50	13
			77	14
			167	6
			170	11
			171	3
96906	MS28778-14	5330-00-472-2783	167	9
			173	1
96906	MS28778-16	5330-00-804-5694	77	82
			121	4
			122	15
			139	9
96906	MS28778-2	5330-00-803-7208	170	34
96906	MS28778-20	5330-00-816-3546	77	18
			84	17
			121	16
96906	MS28778-24	5330-00-819-5111	77	46
			78	24
96906	MS28778-3	5330-00-835-7485	170	38
96906	MS28778-32	5330-00-285-9847	77	85
96906	MS28778-4	5330-00-805-2966	77	109
			80	13
			167	2
			170	8
96906	MS28778-5	5330-00-833-7491	77	95
			81	15
96906	MS28778-6	5330-00-804-5695	77	20
			78	37
			119	27
			168	2
			170	36
			171	6
96906	MS28778-8	5330-00-808-0794	2	10
			20	16
			48	19
			50	18
			77	22
			78	1
			84	4
			88	3

CROSS-REFERENCE INDEXES

PART NUMBER INDEX

CAGEC	PART NUMBER	STOCK NUMBER	FIG.	ITEM
96906	MS28778-8	5330-00-808-0794	107	28
			122	58
			167	3
			168	4
			170	26
			171	1
96906	MS28782-23		179	2
96906	MS28782-39		177	3
96906	MS28782-45		60	3
			61	3
96906	MS28889-2	4820-00-535-6483	81	13
			173	10
96906	MS29523-1	5315-00-514-2660	113	4
96906	MS3102R20-15P		41	3
96906	MS3106R14S7S	5935-00-805-4991	38	1
96906	MS3108R20-15S	5935-00-899-3131	40	1
96906	MS3111F12-3P	5935-00-132-2677	22	2
96906	MS3367-1-9	5975-00-074-2072	13	23
			14	4
96906	MS3367-3-9	5975-00-451-5001	77	27
96906	MS3450W16-10P	5935-01-026-2231	21	19
96906	MS3450W16-10S	5935-01-026-8549	21	30
96906	MS3450W36-9P	5935-01-244-8171	21	38
96906	MS3452W20-4P	5935-01-085-3305	14	10
96906	MS3452W22-14S	5935-01-110-1941	14	9
96906	MS3452W28-11P	5935-01-226-8367	14	12
96906	MS3456W12-5S	5935-01-147-0148	12	11
96906	MS3456W14S2S	5935-00-622-2831	18	18
			21	18
96906	MS3456W14S6S	5935-00-517-8519	39	1
96906	MS3456W16-10P	5935-01-026-2217	38	7
96906	MS3456W16-10S	5935-01-026-5872	21	7
			39	9
96906	MS3456W20-4S	5935-01-041-9179	21	36
96906	MS3456W22-14P	5935-01-077-2628	34	29
96906	MS3456W22-23S	5935-01-019-5156	18	21
96906	MS3456W28-11S	5935-01-070-3679	12	7
96906	MS3456W36-9S	5935-01-247-5770	34	32
96906	MS3476W12-3S	5935-01-115-0215	56	8
96906	MS35190-272	5305-00-088-8332	110	6
96906	MS35190-289	5305-00-958-5246	57	65
96906	MS35190-291	5305-00-958-5247	156	27
96906	MS35190-319	5305-00-959-2723	57	66
96906	MS35191-291	5305-00-988-3785	161	35
96906	MS35206-207	5305-00-954-3938	58	23
96906	MS35206-215	5305-00-889-2997	41	1
96906	MS35206-217	5305-00-889-2999	13	10
			32	3
96906	MS35206-226	5305-00-984-4983	43	10
			47	31
96906	MS35206-227	5305-00-984-4984	45	36

CROSS-REFERENCE INDEXES

PART NUMBER INDEX

CAGEC	PART NUMBER	STOCK NUMBER	FIG.	ITEM
96906	MS35206-228	5305-00-984-4588	47	20
96906	MS35206-230	5305-00-889-3000	24	9
96906	MS35206-231	5305-00-889-3001	13	14
96906	MS35206-241	5305-00-984-6189	47	19
96906	MS35206-242	5305-00-889-3002	47	9
96906	MS35206-243	5305-00-984-6191	24	6
			25	5
96906	MS35206-245	5305-00-984-6193	1	15
			137	24
			138	6
96906	MS35206-246	5305-00-984-6194	13	5
			28	21
			45	43
96906	MS35206-247	5305-00-984-6195	158	8
96906	MS35206-248	5305-00-984-6196	24	26
96906	MS35206-249	5305-00-984-6197	30	1
96906	MS35206-253	5305-00-984-6201	31	2
96906	MS35206-261	5305-00-984-6208	163	22
96906	MS35206-262	5305-00-984-6209	13	20
96906	MS35206-263	5305-00-984-6210	159	18
96906	MS35206-264	5305-00-984-6211	13	19
96906	MS35206-265	5305-00-984-6212	28	23
			37	7
			51	18
96906	MS35206-283	5305-00-988-1727	65	4
96906	MS35207-261	5305-00-990-6444	8	28
96906	MS35207-266	5305-00-995-3444	24	4
			165	23
96906	MS35207-267	5305-00-993-1851	15	9
96906	MS35215-53	5305-00-206-2508	15	4
96906	MS35307-358	5305-00-632-2777	81	4
96906	MS35309-359	5305-00-834-1810	15	3
96906	MS35333-125	5310-01-142-0326	45	50
96906	MS35333-36	5310-00-193-7577	32	5
96906	MS35333-37	5310-00-579-0079	35	5
			45	37
96906	MS35333-38	5310-00-559-0070	30	3
			45	14
96906	MS35333-40	5310-00-550-1130	44	12
96906	MS35333-41	5310-00-167-0721	78	11
96906	MS35333-42	5310-00-595-7237	128	9
96906	MS35335-29	5310-00-616-3554	13	8
96906	MS35335-30	5310-00-209-0788	13	16
			30	9
			43	11
			45	6
			47	32
96906	MS35335-31	5310-00-596-7693	1	18
			13	26
			24	24
			28	22

CROSS-REFERENCE INDEXES

PART NUMBER INDEX

CAGEC	PART NUMBER	STOCK NUMBER	FIG.	ITEM
96906	MS35335-31	5310-00-596-7693	45	42
			137	28
			138	8
96906	MS35335-32	5310-00-596-7691	13	21
			21	33
			28	3
			35	8
			37	6
			40	6
			159	19
96906	MS35335-33	5310-00-209-0786	20	9
			30	31
96906	MS35335-34	5310-00-514-6674	130	35
96906	MS35335-35	5310-00-627-6128	27	1
			44	9
			51	9
			119	17
96906	MS35335-39	5310-00-800-0655	44	6
96906	MS35338-100	5310-00-261-8278	15	5
96096	MS35338-103		15	2
96906	MS35338-145	5310-00-937-0453	92	3
96906	MS35338-39	5310-00-543-5060	58	22
96906	MS35338-40	5310-00-543-2410	41	2
96906	MS35338-41	5310-00-045-4007	1	12
96906	MS35338-42	5310-00-045-3299	31	3
			47	7
			158	7
96906	MS35338-43	5310-00-045-3296	8	30
			103	14
			163	21
			165	17
96906	MS35338-44	5310-00-582-5965	119	39
96906	MS35338-45	5310-00-407-9566	3	3
			4	2
			15	18
			63	20
			119	5
			120	3
			127	54
			142	8
			143	2
			154	3
			182	11
96906	MS35338-46	5310-00-637-9541	7	14
			8	24
			23	3
			30	20
			54	23
			57	16
			63	29
		5310-00-004-5033	63	65

CROSS-REFERENCE INDEXES

PART NUMBER INDEX

CAGEC	PART NUMBER	STOCK NUMBER	FIG.	ITEM
96906	MS35338-46	5310-00-637-9541	71	16
			77	64
			81	3
			98	4
			104	8
			113	9
			136	17
			137	22
			138	2
			141	3
			163	2
			164	7
			180	8
			182	3
			182	24
			187	4
96906	MS35338-47	5310-00-209-0965	93	11
			99	19
			127	18
			134	2
			144	11
			147	16
			148	67
96906	MS35338-48	5310-00-584-5272	7	2
			62	10
			99	21
			136	20
			137	16
			180	2
96906	MS35338-50	5310-00-004-5034	63	17
		5310-00-820-6653	109	16
96906	MS35338-53	5310-00-584-7889	57	34
			180	10
96906	MS35478-1683	6240-00-044-6914	45	3
			46	7
96906	MS35478-1691	6240-00-295-2668	47	5
96906	MS35489-107	5325-00-174-9325	159	21
96906	MS35489-112X	5325-01-224-8300	12	10
96906	MS35489-113	5325-00-989-6286	54	2
96906	MS35489-38	5325-00-582-3601	55	31
96906	MS35489-78	5325-00-276-6098	159	17
96906	MS35489-85X	5325-01-224-8301	16	10
96906	MS35489-90	5325-00-939-9302	18	30
96906	MS35649-202	5310-00-934-9758	28	4
			165	16
96906	MS35649-222	5310-00-934-9738	58	21
96906	MS35649-242	5310-00-934-9739	32	6
96906	MS35649-282	5310-00-934-9757	1	19
			30	4
			137	29
			138	9

CROSS-REFERENCE INDEXES

PART NUMBER INDEX

CAGEC	PART NUMBER	STOCK NUMBER	FIG.	ITEM
96906	MS35650-302	5310-00-934-9751	103	13
96906	MS35670-3A	4820-01-070-7670	175	16
96906	MS35674-30	5315-00-951-4082	116	31
96906	MS35674-48	5315-00-468-1635	76	31
96906	MS35675-41	5315-00-928-2336	63	69
96906	MS35691-13	5310-00-853-9335	76	72
			137	7
96906	MS35691-17	5310-00-851-2682	1	27
			137	4
96906	MS35691-21	5310-00-975-2075	1	44
			8	14
			37	8
			63	43
			76	46
			138	13
			180	13
			181	8
96906	MS35691-37	5310-00-834-8734	1	37
			8	18
			64	21
			136	5
			137	11
96906	MS35691-49	5310-00-851-2677	109	25
96906	MS35691-5	5310-00-971-7989	1	2
96906	MS35691-73	5310-00-891-3426	57	10
			66	18
96906	MS35692-21	5310-00-842-1488	182	64
96906	MS35692-33	5310-00-841-2041	63	14
96906	MS35746-1	4730-00-595-0083	6	9
96906	MS35748-1	5330-00-090-2128	6	8
96906	MS35756-12	5315-00-616-5522	138	17
96906	MS35756-14	5315-00-616-5520	136	13
96906	MS35756-17	5315-00-012-4553	136	9
96906	MS35756-22	5315-00-616-5499	8	22
96906	MS35756-6	5315-00-616-5514	1	23
			137	31
			138	10
96906	MS35756-8	5315-00-616-5526	63	9
			93	4
96906	MS35764-1519		153	4
96906	MS35764-1521	5306-01-016-8296	166	2
96906	MS35769-21	5330-00-514-3289	141	7
			143	13
96906	MS35810-4	5315-00-815-8840	1	33
			76	44
			138	11
96906	MS35810-6	5315-00-140-1938	8	7
96906	MS35812-11	5340-00-177-3957	8	19
96906	MS35812-4	5340-00-985-0823	1	43
			76	43
			138	12

CROSS-REFERENCE INDEXES

PART NUMBER INDEX

CAGEC	PART NUMBER	STOCK NUMBER	FIG.	ITEM
96906	MS35812-6	5340-00-550-8070	64	17
96906	MS35830-140F	5340-01-224-6926	BULK	11
96906	MS35831-6A	5340-01-195-1714	BULK	12
96906	MS35842-11	4730-00-908-3194	98	8
			156	17
96906	MS35842-12	4730-00-908-3193	107	11
96906	MS35842-13	4730-00-909-8627	98	1
			145	1
96906	MS35842-14	4730-00-908-6292	107	2
			145	3
96906	MS35842-15	4730-00-908-6293	56	4
96906	MS35842-16	4730-00-908-6294	73	1
96906	MS39020-1	5905-00-752-4649	157	9
96906	MS39060-2	5930-00-699-9438	24	3
96906	MS39061-1	5930-00-296-6318	24	1
96906	MS39061-4	5930-00-226-6429	24	12
96906	MS39230-2	4730-00-253-4412	2	48
96906	MS45904-76	5310-00-061-1258	45	24
96906	MS49006-10	4730-00-968-6129	152	10
96906	MS49006-11	4730-01-281-9381	84	11
96906	MS51023-113	5305-01-081-5044	55	6
96906	MS51045-40	5305-00-931-2247	179	7
96906	MS51045-49	5305-00-940-9497	60	14
			61	14
			177	17
96906	MS51062-1	2930-00-337-0027	113	3
81348	MS51062-1 NOTE 3 6TRADE1		113	5
96906	MS51073-1	6220-00-337-7463	44	11
96906	MS51095-306L	5306-01-011-1706	71	2
96906	MS51095-358L	5306-01-112-7867	65	20
			108	14
96906	MS51095-360L	5306-01-031-4845	66	26
			67	1
			71	36
96906	MS51095-361L	5306-01-047-7815	66	50
96906	MS51095-420	5305-00-165-8074	57	49
96906	MS51095-420L	5306-01-281-7155	62	1
96906	MS51095-422L	5306-01-201-0289	62	3
96906	MS51096-359	5305-00-912-5113	128	10
96906	MS51113-1	5930-00-307-8856	24	2
96906	MS51300-1	2910-00-798-4056	51	1
96906	MS51400-190	5315-01-179-4535	148	49
96906	MS51500A10	4730-00-278-4311	50	23
96906	MS51500A16-12	4730-00-021-1802	108	9
96906	MS51500A4	4730-00-289-0383	2	6
			9	10
			48	16
			119	10
96906	MS51500A4-4	4730-00-289-5484	119	22
96906	MS51500A6	4730-00-995-1559	2	30

CROSS-REFERENCE INDEXES

PART NUMBER INDEX

CAGEC	PART NUMBER	STOCK NUMBER	FIG.	ITEM
96906	MS51500A6	4730-00-995-1559	50	35
			108	6
			114	3
			122	42
			139	2
			150	6
96906	MS51500A6-2	4730-00-803-5776	2	4
			122	14
96906	MS51500A6-6	4730-00-322-8457	48	28
96906	MS51500A6-8	4730-00-289-0382	2	50
96906	MS51500A8	4730-00-813-9611	2	46
96906	MS51500A8-12	4730-00-540-1197	77	91
96906	MS51500A8-4	4730-00-441-8700	107	20
			189	1
96906	MS51500B6	4730-00-995-1559	77	9
96906	MS51503A4	4730-00-800-7570	189	2
96906	MS51504A16	4730-00-833-9315	122	1
96906	MS51504A16-12	4730-00-231-3018	108	8
			122	36
96906	MS51504A4	4730-00-647-3207	2	8
			9	7
			119	31
96906	MS51504A6	4730-00-812-7999	2	28
			50	31
			77	19
			107	1
			114	1
			139	4
96906	MS51504A6-2	4730-00-803-5765	2	14
			180	12
96906	MS51504A6-6	4730-00-835-3003	122	18
96906	MS51504A8	4730-00-555-1764	2	26
			50	1
			119	34
96906	MS51504A8-12	4730-00-618-8126	54	5
			77	93
96906	MS51504A8-4	4730-00-844-3308	2	25
96906	MS51505A8	4730-00-834-4519	78	20
96906	MS51507A4	4730-00-118-8546	77	123
96906	MS51507A6	4730-00-883-0643	77	104
96906	MS51507A8	4730-00-274-4601	78	8
96906	MS51508A16-12	4730-00-995-1572	150	5
96906	MS51508A6	4730-01-103-3275	150	8
96906	MS51508A6-2	4730-00-890-2251	2	16
96906	MS51508A6-6S	4730-01-005-0623	107	8
96906	MS51508A8-8	4730-00-052-3420	54	13
96906	MS51509A24	4730-01-194-5134	77	50
			122	57
96906	MS51510A6	4730-00-441-2263	2	1
			48	3
96906	MS51510A8	4730-00-797-6566	48	44

CROSS-REFERENCE INDEXES

PART NUMBER INDEX

CAGEC	PART NUMBER	STOCK NUMBER	FIG.	ITEM
96906	MS51511A20	4730-01-069-8478	77	4
96906	MS51511A6	4730-00-995-1579	139	5
96906	MS51512A20	4730-01-207-9552	77	51
96906	MS51514A16	4730-01-090-4922	122	39
96906	MS51516A6	4730-00-242-3147	78	67
96906	MS51516A8	4730-00-451-7958	88	8
96906	MS51518B10	5365-01-249-9707	189	16
96906	MS51518B12	4730-01-203-6941	189	17
96906	MS51518B16	4730-01-132-1183	108	19
96906	MS51518B4	4730-01-021-3850	189	18
96906	MS51518B6	5365-01-251-2034	189	19
96906	MS51518B8	4730-01-070-9214	107	18
			122	61
			189	20
96906	MS51519A4	4730-01-079-1986	189	13
96906	MS51519A8	4730-01-329-4994	189	14
96906	MS51519A8S	4730-00-067-7564	78	29
96906	MS51519B10S	4730-00-855-4799	77	147
			189	12
96906	MS51520A16	4730-01-223-0536	122	21
96906	MS51521A10	4730-01-139-1585	88	21
96906	MS51521A16	4730-00-163-0236	108	10
96906	MS51521A20	4730-01-238-6443	77	3
96906	MS51521A4	4730-01-049-8462	9	9
			77	121
96906	MS51521A6	4730-00-618-5372	48	1
			77	108
96906	MS51521A8	4730-00-812-2434	77	80
			88	1
96906	MS51522A16	4730-01-192-9578	108	11
			122	17
			150	11
96906	MS51522A8S	4730-01-103-8362	77	40
			88	19
96906	MS51523A10	4730-01-024-0915	50	24
96906	MS51523A16	4730-00-827-5852	108	26
96906	MS51523A8	4730-00-074-0713	78	50
			189	25
96906	MS51524A8	4730-01-042-0228	88	12
96906	MS51525A10	4730-00-623-3889	50	29
			77	28
			78	44
96906	MS51525A10-12S	4730-01-116-5969	50	12
96906	MS51525A12	4730-00-710-5571	77	141
96906	MS51525A16	4730-00-930-5392	77	83
			121	3
			122	16
96906	MS51525A20	4730-01-066-1282	77	17
			84	16
96906	MS51525A4	4730-01-007-5232	77	110
96906	MS51525A4-6	4730-00-861-1814	119	26

CROSS-REFERENCE INDEXES

PART NUMBER INDEX

CAGEC	PART NUMBER	STOCK NUMBER	FIG.	ITEM
96906	MS51525A5	4730-00-431-9307	77	98
96906	MS51525A6	4730-00-491-9576	77	21
			78	38
96906	MS51525A6-8	4730-00-080-7040	2	9
			48	21
96906	MS51525A8-10	4730-01-074-0907	2	19
			50	7
			54	7
96906	MS51525B6-8	4730-00-080-7040	107	27
96906	MS51526A10	4730-01-192-9590	88	22
96906	MS51527A10	4730-00-974-7313	78	15
			88	16
96906	MS51527A16	4730-00-840-7236	121	8
96906	MS51527A16S	4730-01-091-1368	122	25
96906	MS51527A20	4730-00-019-1489	77	41
96906	MS51527A24	4730-01-050-1599	77	47
96906	MS51527A4	4730-00-585-2309	77	118
96906	MS51527A5	4730-00-574-6579	77	96
96906	MS51527A6	4730-00-143-3941	77	117
			78	71
96906	MS51527A8	4730-00-822-5609	48	39
			77	38
			78	2
			88	4
			122	59
96906	MS51528A10S	4730-01-125-6381	50	38
96906	MS51528A12	4730-01-192-9593	77	115
96906	MS51528A24	4730-01-150-0877	78	23
96906	MS51528A4	4730-00-163-0237	77	128
96906	MS51528A6	4730-00-679-9766	77	102
			78	61
96906	MS51528A8S	4730-01-124-3728	77	61
			78	78
96906	MS51530A8S	4730-00-226-6902	78	47
96906	MS51531-B6	4730-01-024-7933	48	5
96906	MS51531B8	4730-00-762-1239	48	34
			77	143
96906	MS51532B10	4730-00-542-5911	50	26
			189	5
96906	MS51532B12	4730-00-727-7485	189	6
96906	MS51532B4	4730-01-044-0878	189	7
96906	MS51532B6	4730-00-540-1525	189	8
98441	MS51532B8		77	74
		4730-00-625-2212	189	9
96906	MS51534A6-4	4730-00-706-8711	48	4
			189	23
96906	MS51534A8-4	4730-00-676-3075	48	35
			189	24
96906	MS51534A8-6	4730-00-786-2247	48	45
			77	142
96906	MS51811-1	4730-01-214-6950	105	12

CROSS-REFERENCE INDEXES

PART NUMBER INDEX

CAGEC	PART NUMBER	STOCK NUMBER	FIG.	ITEM
96906	MS51815-1SS	4730-00-854-5837	105	3
96906	MS51815-5	4730-00-096-8331	114	18
96906	MS51819-5	4730-01-027-2243	114	12
96906	MS51823-1	4730-00-069-1184	105	5
96906	MS51825-1A	4730-00-239-2503	105	4
96906	MS51830A108	5340-01-303-1073	91	29
96906	MS51830A108L	5340-01-284-8285	71	40
96906	MS51830A109	5340-01-284-9854	116	32
96906	MS51830A110	5340-01-284-8286	116	33
96906	MS51831-204	5340-00-805-0339	91	30
96906	MS51831A104L	5340-01-132-4684	71	41
96906	MS51831A106L	5340-01-285-7868	71	38
96906	MS51831A109	5340-01-286-7321	116	34
96906	MS51831A109L	5340-01-285-5586	71	37
96906	MS51831A203L	5340-01-093-6225	71	42
96906	MS51840-23	5365-00-549-6688	77	132
96906	MS51840-26	5365-00-674-6831	77	131
			78	48
96906	MS51840-30	5365-01-017-2652	139	10
96906	MS51840-33	5365-01-198-6557	77	86
96906	MS51846-24	4730-00-193-2709	2	37
96906	MS51850-1	5305-01-106-1113	29	1
96906	MS51850-25	5305-01-196-0222	30	8
96906	MS51850-44	5305-00-823-9139	75	4
96906	MS51850-48	5305-00-149-8618	30	5
96906	MS51850-64	5305-00-446-9901	10	19
			18	26
			76	2
			103	27
			156	10
96906	MS51850-65	5305-00-764-4479	11	15
			12	4
			18	23
			21	11
			40	3
96906	MS51850-66	5305-00-852-1012	9	15
			10	11
96906	MS51850-85	5305-00-145-8367	30	11
			159	15
96906	MS51851-13	5305-01-075-7066	165	12
96906	MS51851-64	5305-00-757-8122	2	43
			35	9
96906	MS51851-65	5305-00-191-3641	50	2
96906	MS51860-12	5310-01-141-2512	77	49
			122	56
96906	MS51860-53	4730-00-466-7467	77	122
96906	MS51860-55	4730-00-375-6403	77	107
			78	66
96906	MS51860-56	5310-00-269-6717	78	4
			88	9
96906	MS51860-60	4730-00-375-6405	122	23

CROSS-REFERENCE INDEXES

PART NUMBER INDEX

CAGEC	PART NUMBER	STOCK NUMBER	FIG.	ITEM
96906	MS51860-60	4730-00-375-6405	150	3
96906	MS51861-34	5305-00-058-1082	124	4
96906	MS51861-46	5305-00-432-4202	139	12
96906	MS51864-106-20	5307-01-016-4423	112	3
96906	MS51922-1	5310-00-088-1251	107	25
96906	MS51922-17	5310-00-087-4652	16	3
			65	32
			66	3
			91	1
			162	10
			164	5
96906	MS51922-33	5310-00-225-6993	65	5
			159	2
96906	MS51922-49	5310-00-269-4040	57	24
			163	16
96906	MS51922-53	5310-00-225-6408	44	7
96906	MS51922-72	5310-00-811-1377	57	14
			66	22
96906	MS51937-5	5306-00-050-0347	188	11
96906	MS51937-7	5306-00-017-6143	188	18
96906	MS51938-6	5340-00-902-0426	48	14
96906	MS51939-1	5340-00-764-2334	163	20
96906	MS51953-11	4730-00-196-1483	50	21
96906	MS51953-25	4730-01-104-2268	139	8
96906	MS51953-49	4730-00-019-2067	119	18
96906	MS51953-52	4730-00-761-8538	54	18
96906	MS51953-56	4730-00-196-1490	54	16
96906	MS51953-97	4730-00-196-1468	122	37
96906	MS51955-38	5305-00-054-9273	180	4
96906	MS51957-30	5305-00-054-6654	47	40
96906	MS51961-6		185	6
96906	MS51963-153	5305-00-724-7209	169	7
96906	MS51964-66	5305-00-724-5813	184	9
			185	8
			186	9
96906	MS51965-92	5305-00-724-5832	169	35
			172	20
96906	MS51966-151	5305-01-237-2133	63	68
96906	MS51967-11	5310-00-880-8189	103	6
96906	MS51967-14	5310-00-768-0318	91	13
96906	MS51967-20	5310-00-763-8920	8	21
			140	6
96906	MS51967-24	5310-00-763-8922	57	39
			59	4
96906	MS51967-36	5310-01-031-1458	89	2
96906	MS51967-5	5310-00-880-7744	4	1
			105	17
96906	MS51967-8	5310-00-732-0558	63	36
			77	55
			104	19
			107	14

CROSS-REFERENCE INDEXES

PART NUMBER INDEX

CAGEC	PART NUMBER	STOCK NUMBER	FIG.	ITEM
96906	MS51967-8	5310-00-732-0558	108	18
			113	13
			122	3
			123	1
			180	5
			182	5
96906	MS51968-2	5310-00-768-0319	111	8
96906	MS51968-20	5310-00-763-8905	44	4
96906	MS51968-26	5310-00-763-8912	140	10
96906	MS51968-30	5310-00-413-3040	89	11
96906	MS51968-8	5310-00-732-0559	109	4
96906	MS51975-10	5305-00-914-3819	78	12
96906	MS51975-16	5305-00-914-3821	76	20
96906	MS51975-32	5305-00-941-9426	164	1
96906	MS51975-57	5305-00-701-6980	57	25
96906	MS51975-9	5305-00-949-6185	78	65
96906	MS51981-74L	5305-01-195-7931	7	5
96906	MS52000-10	5330-00-948-0704	13	15
96906	MS52000-7	5330-00-968-1753	13	11
96906	MS52000-8	5330-00-641-4336	13	9
96906	MS52103A040060R	4720-01-179-2927	2	7
96906	MS52103A040163R	4720-00-165-4776	9	8
96906	MS52103A060100R	4720-01-140-0063	2	15
96906	MS52103A060170R	4720-01-194-1991	2	13
96906	MS52103A060380R	4720-01-242-7752	2	51
			77	71
96906	MS52103A060450R	4720-01-128-0330	2	29
96906	MS52103A060540R		50	34
96906	MS52103A060920R	4720-01-184-5453	2	36
96906	MS52103A080060R	4720-01-253-3404	54	6
96906	MS52103A080120R	4720-01-046-7516	54	3
96906	MS52103A080170R	4720-01-242-7753	2	18
96906	MS52103A080230R	4720-01-233-1693	50	11
96906	MS52103A080300R	4720-01-253-3403	54	11
96906	MS52103A080310R	4720-01-191-8334	54	12
96906	MS52103A080380R	4720-01-177-4712	48	41
96906	MS52103A080560R	4720-01-242-7754	2	23
96906	MS52103A080880R	4720-01-243-6289	50	4
96906	MS52103A080890R		2	45
96906	MS52103A080930R	4720-01-181-8649	2	41
96906	MS52103A081120R	4720-01-249-2027	107	19
96906	MS52103A100180R	4720-01-242-7755	50	16
96906	MS52103A100380R	4720-01-179-2479	50	25
96906	MS52103A101060R	4720-01-242-7756	50	37
96906	MS521301A230030		56	13
96906	MS521301A230054		56	6
96906	MS521301A231240	4720-01-224-8713	73	2
96906	MS52149-1	6140-01-210-1964	16	7
96906	MS53001-1	2590-00-735-4063	19	4
96906	MS53006-1	2530-00-854-4457	4	4
96906	MS53011-1	2920-00-304-3493	92	1

CROSS-REFERENCE INDEXES

PART NUMBER INDEX

CAGEC	PART NUMBER	STOCK NUMBER	FIG.	ITEM
96906	MS53022-1	6240-00-047-4097	44	1
96906	MS53046-3	6140-00-404-2669	16	2
96906	MS75004-1	5940-00-549-6581	17	3
96906	MS75004-2	5940-00-549-6583	17	1
96906	MS75021-2	5935-00-846-3884	20	5
96906	MS87006-23	4030-00-946-8497	58	27
			165	18
96906	MS90530-7	5930-01-163-3196	31	1
96906	MS90725-14	5305-00-071-2237	182	36
96906	MS90725-186	5305-00-050-4212	68	1
96906	MS90725-227	5305-01-196-5572	9	24
96906	MS90725-3	5305-00-068-0500	35	1
96906	MS90725-33	5306-00-225-8498	1	50
			119	6
96906	MS90725-34	5306-00-225-8499	109	24
			146	10
			161	17
96906	MS90725-58	5305-00-115-9526	8	25
96906	MS90725-6	5305-00-068-0502	19	6
			30	32
			43	13
			44	13
			63	32
96906	MS90725-60		119	1
96906	MS90725-67	5305-00-269-3217	66	6
96906	MS90725-68	5305-00-269-3218	137	14
96906	MS90725-75	5305-00-269-3225	176	2
96906	MS90726-31	5306-00-225-9086	148	34
96906	MS90726-33	5306-00-225-9088	137	19
			138	22
			161	4
			178	5
96906	MS90726-34	5306-00-225-9089	137	8
96906	MS90726-38	5306-00-225-9093	1	8
96906	MS90726-40	5306-00-225-9095	138	16
96906	MS90726-5	5305-00-068-0505	63	1
96906	MS90726-70	5305-00-269-3246	63	66
96906	MS90726-99	5305-00-710-4205	161	21
96906	MS90727-108	5305-00-990-0695	68	13
96906	MS90727-109L	5306-01-210-9420	80	16
96906	MS90727-114	5305-00-719-5235	180	1
96906	MS90727-114L	5306-01-281-7154	63	50
96906	MS90727-116L	5305-01-211-7474	149	11
96906	MS90727-12	5305-00-267-8956	63	53
96906	MS90727-162	5305-00-727-2283	63	18
			178	4
96906	MS90727-168	5305-00-726-2555	63	60
96906	MS90727-197	5305-00-940-8069	76	6
96906	MS90727-35	5306-00-051-4077	48	42
96906	MS90727-39	5306-00-051-4081	1	45
			63	16

CROSS-REFERENCE INDEXES

PART NUMBER INDEX

CAGEC	PART NUMBER	STOCK NUMBER	FIG.	ITEM
96906	MS90727-62	5305-00-269-3238	181	6
96906	MS90727-63	5305-00-269-3239	109	28
96906	MS90727-63L	5306-01-198-1700	37	2
96906	MS90727-64L	5306-01-199-4344	109	8
96906	MS90727-7	5306-00-068-0514	58	2
96906	MS90727-70	5305-00-269-3246	83	17
96906	MS90727-8	5305-00-068-0515	165	7
96906	MS90727-93	5305-00-709-8531	93	10
96906	MS90728-1L	5306-01-112-8683	38	5
96906	MS90728-10L	5306-01-118-3133	84	22
96906	MS90728-104	5305-00-938-1556	65	24
96906	MS90728-109L	5306-01-191-2451	16	14
96906	MS90728-11	5305-00-225-3841	20	7
96906	MS90728-11L	5306-01-203-6433	78	59
96906	MS90728-110L	5306-01-196-0442	79	5
			87	3
			115	9
			117	20
			122	33
96906	MS90728-111	5305-00-071-2067	7	1
96906	MS90728-111L	5306-01-194-4974	65	15
			66	36
			109	2
			159	7
			165	2
96906	MS90728-112L	5306-01-197-2531	65	41
			66	46
			85	14
96906	MS90728-113	5305-00-071-2069	7	11
			62	12
			65	8
			99	22
96906	MS90728-113L	5306-01-123-0891	65	10
			66	48
			73	20
			121	11
			122	48
96906	MS90728-114	5305-00-071-2070	65	39
			119	7
			134	12
96906	MS90728-114L	5306-01-186-5374	66	31
96906	MS90728-115	5305-00-071-2071	7	20
			159	11
96906	MS90728-115L	5306-01-200-6257	159	8
96906	MS90728-116	5305-00-071-2072	65	7
96906	MS90728-116L	5305-01-204-5473	63	52
96906	MS90728-118	5305-00-071-2074	188	9
96906	MS90728-118L	5306-01-198-6503	91	33
96906	MS90728-12	5305-00-071-2509	119	38
96906	MS90728-121	5305-00-071-2077	58	9
96906	MS90728-122L	5306-01-196-0444	91	17

CROSS-REFERENCE INDEXES

PART NUMBER INDEX

CAGEC	PART NUMBER	STOCK NUMBER	FIG.	ITEM
96906	MS90728-123	5305-00-071-2079	60	16
96906	MS90728-127L	5306-01-197-3556	152	31
96906	MS90728-13L	5306-01-205-9150	78	32
96906	MS90728-163L	5306-01-197-2532	61	19
			72	2
			140	17
96906	MS90728-165	5305-00-724-7223	8	23
96906	MS90728-169	5305-00-724-7236	109	23
96906	MS90728-169L	5306-01-196-6740	151	15
96906	MS90728-17L	5306-01-282-1519	82	17
96906	MS90728-172	5305-00-724-7254	163	14
96906	MS90728-187L	5306-01-195-1579	91	25
96906	MS90728-189L	5306-01-205-2800	76	11
96906	MS90728-190L	5306-01-195-1581	124	2
96906	MS90728-193L	5306-01-196-6741	91	21
96906	MS90728-2L	5306-01-112-4339	66	14
96906	MS90728-232	5305-00-925-7635	57	33
96906	MS90728-232L	5306-01-194-0588	69	2
96906	MS90728-234	5305-00-940-8068	180	9
96906	MS90728-29L	5306-01-195-7921	48	43
96906	MS90728-3	5305-00-071-2506	13	29
96906	MS90728-3L	5306-01-113-0525	32	1
			39	2
			156	23
			161	38
			163	7
96906	MS90728-31L	5306-01-196-0445	108	5
96906	MS90728-32	5306-00-226-4825	154	2
96906	MS90728-32L	5306-01-114-5135	104	4
96906	MS90728-33L	5306-01-197-6578	105	15
96906	MS90728-34	5306-00-226-4827	109	32
			142	7
96906	MS90728-34L	5306-01-134-5721	143	1
96906	MS90728-35	5306-00-226-4828	3	2
			5	2
96906	MS90728-35L	5306-01-253-4427	63	57
96906	MS90728-37	5306-00-226-4830	182	12
96906	MS90728-38	5306-00-226-4831	76	30
96906	MS90728-38L	5306-01-219-4131	142	1
96906	MS90728-39	5306-00-226-4832	76	23
96906	MS90728-41	5306-00-226-4834	8	31
96906	MS90728-41L	5306-01-206-5451	77	87
			142	6
			143	9
96906	MS90728-44L	5306-01-219-5400	142	5
96906	MS90728-45	5306-00-226-4838	4	5
96906	MS90728-46L	5306-01-195-9819	143	8
96906	MS90728-48	5306-00-226-4841	15	17
96906	MS90728-49L	5306-01-220-0187	142	4
96906	MS90728-5L	5306-01-112-4341	48	26
			78	7

CROSS-REFERENCE INDEXES

PART NUMBER INDEX

CAGEC	PART NUMBER	STOCK NUMBER	FIG.	ITEM
96906	MS90728-5L	5306-01-112-4341	156	20
			159	4
96906	MS90728-50L	5306-01-196-3856	142	3
96906	MS90728-54L	5306-01-229-9592	57	20
96906	MS90728-55	5305-00-802-2764	51	10
96906	MS90728-55L	5306-01-194-0590	77	133
96906	MS90728-57L	5306-01-205-2801	11	13
			152	17
96906	MS90728-58	5305-00-543-4372	163	3
96906	MS90728-58L	5306-01-112-4340	11	19
			68	3
			107	17
			108	13
			122	7
			138	1
			163	17
96906	MS90728-59		113	8
		5305-01-140-9118	119	19
			141	2
96906	MS90728-59L	5306-01-112-8682	109	7
			162	3
96906	MS90728-6	5305-00-068-0508	2	33
			163	9
96906	MS90728-6L	5306-01-175-7558	32	8
			156	1
96906	MS90728-60	5305-00-068-0510	113	7
			136	18
			137	21
			162	11
			180	7
96906	MS90728-60L	5306-01-114-0963	1	11
			66	23
			72	7
			76	27
			77	68
			82	18
			107	23
			108	23
			109	27
			118	1
			122	8
			152	3
			152	38
			161	33
96906	MS90728-61	5305-00-543-2419	7	13
96906	MS90728-61L	5306-01-205-2799	66	12
			77	52
			175	7
96906	MS90728-62	5305-00-068-0511	51	2
			53	1
			57	17

CROSS-REFERENCE INDEXES

PART NUMBER INDEX

CAGEC	PART NUMBER	STOCK NUMBER	FIG.	ITEM
96906	MS90728-62	5305-00-068-0511	58	17
			65	34
			65	37
			68	5
			76	1
			125	7
			162	15
			182	17
96906	MS90728-62L	5306-01-112-8681	57	58
			66	7
			76	18
			77	57
			122	52
			136	23
			156	5
96906	MS90728-63	5305-00-688-2111	98	5
96906	MS90728-63L	5306-01-205-2798	84	21
			104	16
96906	MS90728-64	5305-00-725-2317	80	18
			83	20
			87	7
			129	6
			141	13
96906	MS90728-64L	5306-01-119-6763	16	8
			64	19
			65	57
			77	69
			78	36
			93	9
			123	3
96906	MS90728-65	5305-00-821-3865	1	26
96906	MS90728-65L	5306-01-156-5437	66	10
96906	MS90728-66	5305-00-782-9489	77	36
			77	63
			136	29
96906	MS90728-66L	5306-01-194-0591	66	29
			79	3
			83	2
96906	MS90728-67L	5306-01-144-3080	66	1
96906	MS90728-68L	5306-01-253-4428	66	16
96906	MS90728-7	5305-00-071-2505	164	11
96906	MS90728-70	5305-00-846-5703	61	16
96906	MS90728-73	5305-00-990-8632	61	22
96906	MS90728-75L	5306-01-194-0589	60	24
			77	126
96906	MS90728-78	5305-00-964-0503	176	5
96906	MS90728-8	5305-00-225-3843	15	8
			23	7
			28	20
			50	19
			77	73

CROSS-REFERENCE INDEXES

PART NUMBER INDEX

CAGEC	PART NUMBER	STOCK NUMBER	FIG.	ITEM
96906	MS90728-8	5305-00-225-3843	107	4
96906	MS90728-8L	5306-01-119-9321	20	17
			78	27
96906	MS90728-85L	5306-01-196-0218	103	2
96906	MS90728-86L	5306-01-197-1599	91	9
			106	1
			114	15
			116	14
96906	MS90728-87	5305-00-071-1788	99	20
96906	MS90728-87L	5306-01-253-4429	93	5
96906	MS90728-88	5305-00-071-1789	144	12
96906	MS90728-88L	5306-01-197-1598	115	7
			116	19
96906	MS90728-89	5305-00-071-2055	148	71
96906	MS90728-89L	5306-01-195-1580	122	27
96906	MS90728-9L	5306-01-194-0587	16	12
96906	MS90728-90	5305-00-071-2056	147	17
			148	70
96906	MS90728-90L	5306-01-196-0219	115	1
96906	MS90728-91	5305-00-071-2057	148	68
96906	MS90728-91L	5306-01-198-4665	151	3
96906	MS90908-1	2910-00-752-9138	51	16
96906	MS91528-3D2B	5355-00-687-2917	19	1
96906	MS9245-46	5315-00-939-0832	65	53
			66	35
96906	MS9320-12	5310-00-184-8974	66	47
			77	33
			105	8
			107	16
			108	17
			122	4
96906	MS9320-14	5310-00-184-8992	62	11
			63	51
			91	15
			122	31
			152	30
96906	MS9320-15	5310-00-805-6758	65	38
96906	MS9320-16	5310-00-585-3243	61	18
			151	16
96906	MS9320-17	5310-00-953-8703	152	44
96906	MS9468-23	5315-01-016-5658	64	18
96906	MS9549-11	5310-00-839-9269	165	25
08162	MU1207DAL	3110-00-580-5589	182	20
81349	M12133/1-11P	5310-01-015-3370	63	10
81349	M12133/1-14P	5310-01-217-5206	63	7
74400	M13158	6220-01-182-7606	44	2
81349	M13486/1-1	6145-00-699-8963	BULK	34
81349	M13486/1-3	6145-00-161-1609	BULK	35
81349	M13486/1-3AR		12	13
			18	19
			21	17

best copy available

CROSS-REFERENCE INDEXES

PART NUMBER INDEX

CAGEC	PART NUMBER	STOCK NUMBER	FIG.	ITEM
81349	M13486/1-3AR		22	5
			34	24
			39	8
81349	M13486/1-5	6145-00-152-6499	BULK	36
81349	M13486/1-5AR		12	12
			18	31
			20	11
			21	4
			34	1
			42	4
			43	9
			55	25
			157	10
			160	5
81349	M13486/1-7	6145-00-705-6678	BULK	37
81349	M13486/1-7AR		21	25
			34	2
81349	M13486/1-9	6145-00-538-8222	BULK	38
81349	M13486/1-9AR		34	5
			160	4
81349	M13486/10-1	6145-00-705-6684	BULK	1
81349	M13486/10-1AR		40	8
81349	M13486/2-2	6145-00-567-3255	BULK	2
81349	M13486/2-2AR		21	31
			38	3
			39	10
81349	M13516/1-1	5925-00-026-4767	30	2
81349	M13516/1-2	5925-00-803-4424	30	6
81349	M13516/1-4	5925-00-333-1564	30	7
81349	M21840TYPE1A,CL1 ,1.00W,BLK3230		BULK	5
81349	M21840TYPE1A,CL1 ,1.50W,BLK3230		BULK	6
81349	M22759/18-16-9	6145-01-043-0757	BULK	39
81349	M22759/18-16-9AR		14	3
81349	M22759/18-20-9	6145-01-013-1525	BULK	40
82577	M22759/18-20-9AR		14	2
81349	M23053/1-101-0AR		21	8
81349	M23053/1-101-0	5970-00-063-1500	BULK	20
81349	M23053/1-101-0AR		12	14
			18	16
			34	8
81349	M23053/1-102-0	5970-00-063-1499	BULK	21
81349	M23053/1-102-0AR		12	1
			21	24
			22	6
			34	6
81349	M23053/1-103-0	5970-00-063-1495	BULK	22
81349	M23053/1-103-0AR		34	3
81349	M23053/1-201-0	5970-01-085-3431	BULK	23
81349	M23053/1-201-0AR		41	5

CROSS-REFERENCE INDEXES

PART NUMBER INDEX

CAGEC	PART NUMBER	STOCK NUMBER	FIG.	ITEM
81349	M23053/4-102-0		BULK	24
81349	M23053/4-102-0AR		30	35
81349	M23053/5-103-9	5970-00-819-9565	BULK	25
81349	M23053/5-103-9AR		14	1
81349	M23053/5-108-0	5970-00-812-2967	BULK	26
81349	M23053/5-108-0AR		160	2
81349	M23053/5-305-0	5970-01-162-6918	BULK	27
81349	M24066/2-316	5340-01-158-6585	58	24
81349	M24066/2-324	5340-01-138-4994	165	11
81349	M24240/3-20812	5306-01-195-3254	169	16
			172	1
81349	M24240/3-21014	5305-01-271-3248	92	4
74400	M24728	6220-01-182-1083	25	6
81349	M27426-1164A	5365-01-194-0878	115	6
81349	M27426-3158B	5365-00-664-5386	60	17
81349	M27426-3172B	5365-00-943-5352	152	14
81349	M27426-3176B	5365-00-943-5353	57	21
92863	M3424,REV 3.	4730-01-176-2947	84	6
81349	M43436/1-1	9905-00-752-4649	24	16
			55	26
			160	3
81349	M43436/1-3	9905-00-893-3570	12	6
			14	5
			18	15
			21	42
			22	4
			34	31
			38	2
			39	7
			40	9
			40	14
			41	6
			42	6
			160	9
81349	M43436/3-1	9905-01-013-8723	12	3
			18	14
			22	3
			30	22
			34	20
			120	31
81349	M43436/4-1	9905-00-935-3863	21	23
			38	6
			39	5
			41	8
			42	5
			43	16
			46	4
81349	M45932/1-39L	5340-01-113-5615	71	39
			193	8
81349	M45932/1-40	5340-01-086-6760	193	7
81349	M52525/16-16	4730-00-755-7609	77	59

CROSS-REFERENCE INDEXES

PART NUMBER INDEX

CAGEC	PART NUMBER	STOCK NUMBER	FIG.	ITEM
81349	M52525/16-16	4730-00-755-7609	122	53
81349	M52525/16-20	4730-00-255-0560	122	45
81349	M52525/16-24	4730-00-089-3406	121	9
			122	49
81349	M5423-09-02	5930-00-823-0482	19	2
81349	M5423/16-01	5930-01-141-5368	13	2
81349	M62217/I-8-19		113	2
81349	M62217/I-8-39		113	19
81349	M62217/1-16-4		98	9
81349	M62217/1-16-57		107	12
81349	M62217/1-16BULK	4720-01-122-9847	BULK	15
81349	M62217/1-36	4720-01-192-5869	BULK	17
81349	M62217/1-36-4		98	2
81349	M62217/1-44	4720-01-088-1085	BULK	18
81349	M62217/1-44-6		107	22
81349	M62217/18 BULK L		BULK	16
81349	M81934/1-11-C-02 -0		63	23
81349	M81934/1-160032	3120-01-254-4442	62	7
81349	M81935/1-08	3120-01-144-3857	91	3
81349	M81935/1-08L	3120-01-140-9939	91	18
81349	M81935/2-12K	3120-01-242-6253	76	4
81349	M83461/1-342	5330-01-176-7535	84	2
81349	M85049/1-12B	5935-01-169-0155	40	2
80205	NAS1351-3H-10P	5305-00-068-0543	110	15
80205	NAS632-18	5306-00-818-5330	91	31
19207	NPN		177	4
19207	NPN-1		179	3
73134	NRR12	3120-01-104-5989	76	15
80545	N3508	5360-01-186-1129	161	32
24446	N402P13C6	5310-00-833-3340	135	9
02614	N405P41B6	5310-00-582-5965	13	28
			15	7
			19	5
			35	2
			50	20
			63	2
			65	3
			111	7
			164	10
			182	35
05842	PF4033-2738	4320-01-167-8099	86	4
77902	PLEXIGLAS GM	9330-00-563-4527	BULK	31
18265	PSH00-1638	2940-01-187-9448	103	11
62983	PVB10RSY31C11	4320-01-132-0609	85	1
18265	P00-4906	5340-01-191-6460	3	4
18265	P01-6972	5330-00-477-0338	103	20
18265	P01-7804	5330-00-141-6552	103	9
71176	P1-1 1/4	5365-01-132-3825	109	33
18265	P10-5738	5365-01-147-8146	103	25
18265	P10-5740	5330-01-027-9446	103	23

CROSS-REFERENCE INDEXES

PART NUMBER INDEX

CAGEC	PART NUMBER	STOCK NUMBER	FIG.	ITEM
18265	P10-9062	5310-01-044-0685	103	22
18265	P10-9084	2910-01-226-3455	103	19
18265	P10-9445		103	21
18265	P12-7009	5340-01-195-8016	103	10
18265	P15-2241	2940-01-187-9535	103	24
18265	P15-4778	5905-01-187-6448	103	12
18265	P15-4779		103	26
49367	P400136-1	6210-00-745-7649	25	1
91816	P59-500	4820-01-120-4532	77	8
			108	1
			122	41
99017	P88	4730-01-195-8513	157	2
61112	QA2-STC	2910-01-017-5314	105	10
61112	QA4-5TC	2910-01-183-2627	105	14
81348	QQW461	9505-00-248-9842	BULK	42
61112	QS1189	5340-01-088-2385	105	18
78280	QS1190-2	5930-01-155-7762	105	19
61112	QS4-6PC	4820-01-185-5760	105	2
78643	R-111	3040-00-133-9967	136	4
			137	12
60342	RBX00-2251	2940-01-226-2773	103	8
81348	RRC271		70	14
		4010-00-720-4467	BULK	4
91816	RV57-11	4820-01-217-3305	170	10
78643	R107	3040-00-969-5543	1	1
78643	R111	3040-00-133-9967	1	36
43334	R6	3110-00-274-4958	182	61
00736	R9W1302-156	4730-01-185-0472	141	9
00736	R9W1302-826	4730-01-158-4081	141	11
53964	SA910070	2910-00-152-2033	KIT	
98878	SB22211	3110-01-199-1392	127	16
92563	SB22313-12	3110-01-204-3426	127	25
53964	SC220086		53	6
06046	SG202-48006	5930-01-180-5628	20	12
			36	4
64294	SK4376	3040-01-192-1633	74	9
83324	SR62D	5133-01-195-1957	193	2
83324	SR62S-A		193	5
83324	SR62W-A	5120-01-192-7620	193	4
83324	SR62W4-A		193	3
83324	SR621R	5120-01-193-5061	193	6
18265	STB14-0138	2940-01-184-4827	103	7
26124	SX2151-076	3120-01-183-2725	169	37
			170	15
			172	6
			172	23
97820	S11248-112	5330-00-630-5958	170	18
15434	S189C	5305-00-509-8106	94	13
15434	S223	5310-00-521-8595	96	5
82484	S2280-1	2540-00-212-9068	9	12
15434	S2286	5305-00-804-6318	102	1

CROSS-REFERENCE INDEXES

PART NUMBER INDEX

CAGEC	PART NUMBER	STOCK NUMBER	FIG.	ITEM
82484	S2309	2540-00-065-1922	9	2
15434	S604	5310-00-261-7340	96	9
59730	TG0		21	26
59730	TG2	5940-00-705-6702	34	16
53421	T30R	5975-01-064-5592	55	33
51600	U-5211-L	3110-01-197-2646	127	30
43334	U1313TM	3110-00-100-7349	127	46
60380	WJ243024	3110-01-183-2686	116	15
60380	WJ344024	3110-00-556-8162	127	43
81348	WW-H-1053	4720-01-238-2316	BULK	13
81348	WW-P-471ACAAAG		57	71
81348	WW-P-471ACABCA	4730-00-018-9566	177	12
81348	WW-P-471ACABCF	4730-00-273-6714	175	14
81348	WW-P-471ACABUD	4730-00-289-5176	2	49
			182	14
81348	WW-P-471ACBBCN	4730-00-964-1782	71	32
81348	WW-P-471BDQBCBA	4730-01-194-5336	114	14
81348	WW-P-471BDQBCCB	4730-01-193-3641	119	21
81348	WW-P-471BDQBCDB	4730-01-192-4729	2	53
			139	7
81348	WW-P-471BDQBCDC		2	47
			119	49
81348	WW-P-471BDQBCEB	4730-00-186-3027	2	27
81349	WW-P-471BEQBCFC	4730-01-193-7391	122	19
92867	X18671	5340-01-175-0564	8	1
65814	0-474	5120-00-157-2133	188	36
84561	0118860548		80	8
21439	01857-007	5310-00-768-0318	122	30
00736	02FC30	7690-01-190-5197	118	8
06046	029-20541	3040-01-199-3226	20	13
			36	5
00736	03RA18-231	2940-00-787-7141	118	4
00736	03W182228	4330-01-184-4976	118	3
71468	030-2196-001	5315-01-156-6314	18	34
			21	29
			30	37
			34	13
71468	031-1267-001	5999-01-150-8608	18	33
			21	28
			30	36
			34	12
00736	032A15-158		118	11
13130	04314	5133-01-065-9942	194	20
98441	0502-8-8	4730-01-126-9758	119	14
98441	0503-10-8	4730-00-186-3845	50	17
			78	88
11153	065	8315-01-086-9635	BULK	7
89881	1&2F/1&2R/CLUTCH		131	1
82296	1A32F8T60S22	4820-01-158-4066	79	4
12603	1C512	5305-00-007-6338	120	2
			130	36

CROSS-REFERENCE INDEXES

PART NUMBER INDEX

CAGEC	PART NUMBER	STOCK NUMBER	FIG.	ITEM
12603	1C514	5305-01-231-0613	120	27
12603	1C616	5306-00-741-7519	129	4
12603	1C636	5305-00-103-9814	128	7
12603	1C640J	5305-01-057-3058	129	5
12603	1C716	5306-00-104-2845	127	19
12603	1C724	5306-00-017-4723	134	1
11083	1H3337	5306-00-455-0468	55	18
11083	1H4253		83	6
12603	1H530	5320-01-191-6351	126	6
12603	1H534		126	16
43999	1N7-8A	5310-00-297-8901	91	4
77820	10-33644	5999-00-485-8954	43	3
81343	10-8 070123C	4730-01-214-1741	189	22
97399	10F0-1-3T	4820-00-513-5471	189	28
12603	10J08	3110-00-100-6151	127	26
			131	19
			132	19
			133	19
96881	10L10F	3120-00-889-8567	64	7
05842	1001.003	5305-01-202-8233	86	8
05842	1006.026	9905-01-185-2642	86	9
05842	1008.006	5365-01-194-8937	86	39
05842	1011.016	3110-00-100-6155	86	20
09704	101286	2540-01-206-3878	161	12
05842	1013.016	4320-01-189-1770	86	26
05842	1013.325		86	14
06853	101381	2530-01-173-4694	5	3
05842	1017.290	5340-01-209-7084	86	24
06853	102215		6	2
05842	1027.155	3120-01-185-8594	86	11
05842	1033.110	5360-01-185-8524	86	27
05842	1033.290	4820-01-207-9221	86	30
05842	1034.155	3110-01-186-7464	86	17
05842	1041.155	3110-01-210-0847	86	48
05842	1042.155	3120-01-210-0867	86	16
15434	105375	9905-00-733-7622	102	3
05842	1056.232	3120-01-208-5399	86	47
05842	1058.232	3120-01-208-5400	86	34
03504	106358	3110-00-183-9901	130	6
99688	10650	2930-01-194-0304	55	3
05842	1068.110	5360-01-185-8525	86	19
05842	1081.049	5365-01-191-2994	86	15
05842	1082.049	5365-01-207-1291	86	31
19207	10884510	5330-00-167-9773	45	23
19207	10889926	5330-00-860-9153	92	2
19207	10893855	1005-00-600-5294	19	3
19207	10894808	2590-00-083-0266	15	19
05842	1090.503		86	37
19207	10901079	2590-01-245-2447	163	11
19207	10901121	2590-00-745-7892	24	10
19207	10902609	5330-00-745-7814	72	4

CROSS-REFERENCE INDEXES

PART NUMBER INDEX

CAGEC	PART NUMBER	STOCK NUMBER	FIG.	ITEM
19207	10904944	3120-00-851-9179	182	63
19207	10908534	5310-00-882-2319	186	5
19207	10908535	5365-00-492-6068	185	2
			186	2
19207	10908536	5315-00-881-3422	186	8
19207	10908541	3020-00-874-6719	186	6
19207	10908542		186	3
19207	10908578	3020-00-874-6722	185	1
19207	10908579		185	3
19204	10908580	2590-00-229-5696	182	54
19207	10908581	3020-00-887-8918	185	5
19207	10908582	5310-00-878-7693	185	4
19207	10908583		185	7
19207	10908629		184	2
19207	10908631	2520-01-069-7396	184	4
19207	10908632	3020-00-887-8917	184	6
19207	10908633	5310-00-882-7121	184	5
19207	10908634	5365-00-878-7694	184	8
19207	10908642	5310-01-057-4995	182	55
19207	10908648	5310-01-069-7368	182	53
19207	10908649	5365-00-878-7692	182	49
19207	10908650	5310-00-878-7691	182	58
			186	4
19200	10910174-16	5310-00-987-1294	68	10
19207	10915155	5365-01-069-9183	182	30
			184	3
19207	10922309	6220-00-933-9521	45	1
19207	10925306	6650-00-973-1176	63	59
19207	10929868	2920-00-909-2483	93	1
05842	1094.503		86	36
19207	10942115	6250-00-112-0475	47	13
05842	1096.028	5305-01-185-8466	86	42
05842	1096.503		86	33
05842	1113.562		86	35
05842	1115.288	4320-01-176-9434	86	13
05842	1115.562		86	32
17773	11176106-5	5340-00-150-1658	156	9
05842	1125.503		86	46
05842	1134.098	5340-01-180-8673	86	41
05842	1137.006	5310-01-206-6636	86	25
05842	11391010		86	12
77873	114-8202A	2520-00-871-6772	149	3
05842	1140.050		86	43
19207	11591041	5330-00-948-0964	45	34
19207	11592745	5935-00-443-5076	43	2
19207	11592847		43	6
19207	11594253	2590-00-045-9901	45	22
19207	11602326	5120-00-880-4264	188	37
19207	11614174-1	5905-00-182-5041	44	14
05842	1163.277	4320-01-176-9441	86	7
19207	11639519-2	5330-00-462-0507	46	8

CROSS-REFERENCE INDEXES

PART NUMBER INDEX

CAGEC	PART NUMBER	STOCK NUMBER	FIG.	ITEM
19207	11639520		46	5
19207	11639535	6220-00-179-4324	46	9
19207	11640178	5930-00-133-9629	24	13
			30	13
19207	11652124	5330-01-192-9332	20	20
19207	11674728	5935-01-059-0117	15	10
19207	11674729	5330-01-059-4286	15	13
19207	11674730	5970-01-044-8391	15	14
19207	11675004	5340-01-059-0114	15	11
19207	11677925	4020-01-058-3483	BULK	32
19207	11682345	5935-01-044-8382	15	12
62983	119982	5365-00-868-9569	85	11
26124	12DU16	3120-00-981-5117	109	15
02892	12X19X24		117	9
71468	120-1806-000	5935-01-154-6233	21	27
			34	11
71468	120-1809-000	5935-01-152-6814	30	38
62983	120428	5365-00-869-3192	85	12
91340	12175-31	4730-00-196-1467	119	15
19200	12252157	4933-01-046-7109	188	6
19207	12258931-1	6680-01-114-7653	36	6
19207	12258932-7	6695-01-146-7132	36	10
19207	12258937-2	6625-01-175-2503	15	1
19207	12258943	5935-01-116-3431	13	4
19207	12290671	5330-01-094-9020	45	40
19207	12292100	4140-01-113-4668	56	7
19207	12292100-1		56	12
19207	12293185-3		56	9
19207	12295791-5AR		56	11
19207	12296626	7690-01-114-3702	103	17
19207	12296731		49	5
19207	12296789	9905-01-107-3274	49	6
19207	12297014	4210-01-107-3298	49	1
19207	12297759	9905-01-109-8111	75	1
19207	12300495	2540-01-147-9977	161	14
19207	12307556	4210-01-125-4294	48	17
19207	12314082	6220-01-123-1353	47	25
19207	12325719	6680-01-184-9213	84	3
19207	12325725	4730-00-214-8108	119	23
19207	12325726	4730-01-201-1001	119	45
19207	12325729		65	23
19207	12325730	2540-01-216-7048	162	8
19207	12325738	5365-01-183-2770	57	57
19207	12325741	3040-01-181-6528	147	19
19207	12325743	4710-01-183-6896	104	1
19207	12325747	2920-01-182-1323	37	5
19207	12325748	5945-01-182-1272	30	12
19207	12325749	9905-01-174-0955	1	17
19207	12325750	9905-01-174-0956	1	14
19207	12325751	9905-01-179-1166	138	7
19207	12325752	9905-01-179-1167	137	25

CROSS-REFERENCE INDEXES

PART NUMBER INDEX

CAGEC	PART NUMBER	STOCK NUMBER	FIG.	ITEM
19207	12325753	5905-01-179-1168	137	27
19207	12325754	5905-01-187-6453	66	52
19207	12325757	5340-01-189-6463	32	4
19207	12325758	5340-01-189-6464	32	7
19207	12325759	2540-01-254-5388	65	50
19207	12325762	6150-01-183-8380	156	8
19207	12325763	5340-01-178-2176	50	36
19207	12325765	5995-01-182-1324	37	3
19207	12325766	4710-01-179-7633	78	19
19207	12325769	5306-01-217-3262	64	23
19207	12325776	5340-01-179-1046	50	28
19207	12325777	5340-01-178-2177	50	27
19207	12325791	3040-01-179-9241	76	48
19207	12325792	3040-01-179-9210	76	58
19207	12325793	3040-01-179-9211	76	41
19207	12325794		152	42
19207	12325795		148	50
19207	12325799-1		76	70
19207	12325799-2		76	67
19207	12325799-3		76	64
19207	12325800	5315-01-236-1965	148	15
19207	12325801		175	15
19207	12325803	5340-01-248-9633	66	13
19207	12325812	9320-01-176-8611	52	3
19207	12325813	9320-01-186-9781	52	4
19207	12325814	9320-01-176-9177	52	5
19207	12325815	9320-01-176-9178	52	2
19207	12325816	9320-01-176-9179	52	6
19207	12325817	9320-01-176-8612	52	1
19207	12325818		148	32
19207	12325819	2590-01-184-4781	66	41
19207	12325823	4730-00-226-8874	36	9
			119	44
19207	12325834	9515-01-183-6893	7	23
19207	12325835	9515-01-187-0995	7	10
19207	12325836	9515-01-186-5878	7	7
19207	12325837	9515-01-186-5879	7	21
19207	12325842	3040-01-183-8357	177	1
19207	12325843	3040-01-182-1306	60	1
19207	12325844	3040-01-187-0571	61	1
19207	12325845	2590-01-183-6865	178	20
19207	12325848	9515-01-186-5880	7	8
19207	12325854	9515-01-187-9513	7	25
19207	12325856	9515-01-184-4955	65	27
19207	12325858	2910-01-222-8364	51	15
19207	12325859	5330-01-178-3361	51	14
19207	12325860	5340-01-171-0109	51	13
19207	12325866	2910-01-171-0070	51	19
19207	12331831	9515-01-186-5881	7	4
19207	12331834	9515-01-189-6488	16	16
19207	12331835	9515-01-186-5883	7	19

CROSS-REFERENCE INDEXES

PART NUMBER INDEX

CAGEC	PART NUMBER	STOCK NUMBER	FIG.	ITEM
19207	12331836	9515-01-184-4956	65	25
19207	12331837	9515-01-184-4957	65	1
19207	12331884		76	52
19207	12331885		76	61
19207	12331886		76	36
19207	12331895-1	3120-01-179-9151	76	35
			76	39
			76	51
			76	60
			76	63
			76	66
			76	69
19207	12331895-6	3120-01-181-1629	8	33
19207	12331896	5306-01-206-5452	140	1
19207	12331901	5340-01-226-7379	93	8
19207	12331904	3020-01-184-1932	93	13
19207	12331906		151	19
19207	12331918-1		10	2
			10	7
19207	12331918-2		10	16
19207	12331919-1		10	40
19207	12331919-2		10	41
19207	12331919-3		10	3
19207	12331919-4		10	8
19207	12331919-5		10	15
19207	12331923-1		10	28
19207	12331923-13		10	26
19207	12331923-14		10	29
19207	12331923-15		10	38
19207	12331923-16		10	27
19207	12331923-2		10	31
19207	12331923-3		10	33
19207	12331923-4		10	32
19207	12331923-6		10	39
19207	12331923-7		10	37
19207	12331924-1		10	35
19207	12331924-2		10	34
19207	12331924-3		10	36
19207	12331924-4		10	30
19207	12331924-5		10	25
19207	12331924-6		10	5
			10	9
			10	13
19207	12331932-1		10	4
19207	12331932-3		10	10
19207	12331932-4		10	14
19207	12331940	5315-01-194-5182	143	31
19207	12331941	5315-01-194-5183	143	34
19207	12331946	5315-01-185-0327	143	42
19207	12331948		151	9
19207	12331952	4730-01-192-3497	122	20

CROSS-REFERENCE INDEXES

PART NUMBER INDEX

CAGEC	PART NUMBER	STOCK NUMBER	FIG.	ITEM
19207	12331956	3040-01-204-5560	8	13
19207	12331969		10	1
19207	12331973	2590-01-178-5415	10	22
19207	12331977	5670-01-180-9909	7	6
19207	12331985	4710-01-189-9806	78	75
19207	12331987	5340-01-179-1045	50	30
19207	12331989	5340-01-182-8776	109	13
19207	12331990	4140-01-183-8348	111	1
19207	12331991		111	4
19207	12331992		111	3
19207	12331995		111	2
19207	12331998	5360-01-207-7829	111	9
19207	12331999	9905-01-183-2692	111	5
19207	12332000	4010-01-183-2714	109	10
19207	12332002	3020-01-184-4852	109	9
19207	12332007	5340-01-218-8562	8	32
19207	12332014	5340-01-184-4824	109	3
19207	12332021	2590-01-193-3610	112	2
19207	12332022	2930-01-192-4583	109	6
19207	12332028-1	2530-01-187-0993	91	8
19207	12332028-2	5340-01-187-0994	91	7
19207	12332029	5340-01-184-4850	104	10
19207	12332047	5340-01-183-2620	104	23
19207	12332092	2510-01-183-6821	66	25
19207	12332097-1	3040-01-179-9220	76	68
19207	12332097-2	3040-01-179-9221	76	65
19207	12332097-3	3040-01-186-8004	76	62
19207	12332101	4710-01-219-7917	78	46
19207	12332148	5340-01-183-2739	103	15
19207	12332149	5306-01-183-2740	103	16
19207	12332152	9905-01-186-7322	26	7
19207	12332153	9905-01-186-7323	26	9
19207	12332154	9905-01-186-7324	26	8
19207	12332156	5340-01-185-0456	35	3
19207	12332159	5340-01-171-0065	136	27
19207	12332161	3040-01-171-0087	136	24
19207	12332227		71	35
19207	12332228	9330-01-183-2763	71	34
19207	12332229	5340-01-183-2776	71	33
19207	12332232	3040-01-179-9222	76	59
19207	12332233	3040-01-179-9219	76	50
19207	12332235		76	40
19207	12332237	9905-01-182-7485	30	30
19207	12332238	5340-01-179-9054	76	10
19207	12332239	3040-01-179-9223	76	38
19207	12332264	2815-01-184-1886	104	13
19207	12332269	5340-01-219-9427	104	17
19207	12332331	3040-01-186-8003	76	34
19207	12332340	5315-01-186-7991	188	24
19207	12332360	9515-01-181-9514	37	4
19207	12332361	9515-01-181-9515	37	1

CROSS-REFERENCE INDEXES

PART NUMBER INDEX

CAGEC	PART NUMBER	STOCK NUMBER	FIG.	ITEM
19207	12332369	4010-01-224-1529	66	28
19207	12332432	2990-01-183-2642	104	18
19207	12332465	5330-01-179-9494	51	5
19207	12332466	6160-01-182-7492	16	1
19207	12332471	2540-01-212-2466	161	18
19207	12332488	5340-01-182-1292	23	8
19207	12332489	5340-01-182-1079	23	1
19207	12332500	5305-01-195-1592	147	20
19207	12332501	5305-01-199-4352	148	4
19207	12332502	5315-01-189-9769	148	31
19207	12332510		145	27
19207	12332511		147	6
19207	12332512		145	24
19207	12332517		145	11
19207	12332518		145	16
19207	12332526		103	29
19207	12332529	4710-01-179-4348	2	3
19207	12332540	5340-01-174-0489	1	22
19207	12332553	2815-01-179-9053	76	14
19207	12332554		76	16
19207	12332555	3040-01-219-7618	153	2
19207	12332556	3020-01-219-7561	153	1
19207	12332562	5340-01-183-2734	66	49
19207	12332572		66	45
19207	12332582	5340-01-183-2779	65	14
19207	12334250-19	4720-01-244-2447	BULK	19
19207	12334664	5640-01-183-2729	67	5
19207	12334676	2590-01-182-1261	24	14
19207	12334679-1	5307-01-182-7581	16	6
19207	12334679-2	5307-01-183-6855	16	5
19207	12334687	5330-01-191-3178	13	27
19207	12334694	4710-01-189-9814	78	81
19207	12334695	5340-01-180-9858	54	25
19207	12334702	4710-01-189-9810	78	83
19207	12334703	4710-01-189-9808	78	68
19207	12334704	4710-01-189-9812	78	77
19207	12334705	4710-01-189-9803	78	3
19207	12334724-1	5340-01-216-5567	58	29
			165	19
19207	12334763	2590-01-182-8765	40	7
19207	12334770	2540-01-211-6638	1	25
19207	12334772	9515-01-184-4961	65	49
19207	12334775	2540-01-178-5401	161	7
19207	12334776	2540-01-178-5402	161	40
19207	12334788	5330-01-183-8359	174	4
19207	12334808	2590-01-179-4304	8	2
19207	12334811	9515-01-184-4964	65	35
19207	12334821	4710-01-189-9804	78	18
19207	12334822	4710-01-189-9805	78	17
19207	12334824	2510-01-226-7378	64	4
19207	12334829	5340-01-183-8352	156	26

CROSS-REFERENCE INDEXES

PART NUMBER INDEX

CAGEC	PART NUMBER	STOCK NUMBER	FIG.	ITEM
19207	12334842	5365-01-209-7421	65	40
19207	12334851	2540-01-181-6349	162	1
19207	12334852	2510-01-181-6350	162	4
19207	12334854	2510-01-184-4818	162	16
19207	12334859	5315-01-181-6409	162	5
19207	12334860		162	9
19207	12334863	5310-01-195-5095	162	12
19207	12334875	5340-01-183-2619	9	25
19207	12334909	9905-01-181-6397	159	1
19207	12334912	9515-01-184-4970	65	36
19207	12334923	5340-01-171-0110	51	4
19207	12334929	5340-01-183-8353	156	3
19207	12334934	5306-01-216-6605	140	16
19207	12334936	4710-01-190-0840	48	7
19207	12334937	4710-01-190-0841	48	2
19207	12334938	4710-01-190-0842	48	22
19207	12334941	4710-01-180-5637	48	33
19207	12334951	5315-01-237-4938	64	9
19207	12334952	5315-01-233-9848	64	10
19207	12334958	5365-01-241-5977	64	12
19207	12334959	5340-01-216-5570	64	3
19207	12334960	5340-01-217-3260	64	15
19207	12334962	5340-01-217-3261	64	20
19207	12334963	5306-01-226-4578	64	22
19207	12334966		64	8
19207	12334968	4320-01-184-1897	154	5
19207	12334969		154	4
19207	12334986		140	5
19207	12334991	5306-01-210-2897	54	15
19207	12334993	5340-01-180-6780	50	5
19207	12334994	5340-01-180-6781	50	6
19207	12334996		182	7
19207	12334997	5330-01-209-7295	182	8
19207	12334999	5305-01-210-0770	65	13
19207	12335002		77	66
19207	12335004		77	67
19207	12335005		140	9
19207	12335044-1		179	4
19207	12335044-2		177	7
19207	12335044-3		60	6
19207	12335044-4		61	6
19207	12335054-1	5365-01-229-2090	170	35
19207	12335054-2	5365-01-200-1519	167	1
			170	9
19207	12335054-3	5365-01-230-9909	170	39
19207	12335054-4	5365-01-242-4564	168	1
			170	37
			171	5
19207	12335054-5	5365-01-228-0730	167	4
			168	3
			171	2

CROSS-REFERENCE INDEXES

PART NUMBER INDEX

CAGEC	PART NUMBER	STOCK NUMBER	FIG.	ITEM
19207	12335054-6	5365-01-228-0731	171	4
19207	12335056	2530-01-183-8358	174	5
19207	12335057		10	6
19207	12335070	2540-01-217-3258	64	5
19207	12335083	5340-01-217-3259	64	24
19207	12335091	5995-01-183-8398	159	20
19207	12335098	5305-01-193-7193	8	12
19207	12335099	3040-01-201-0952	84	19
19207	12335107	2510-01-193-7179	91	11
19207	12335109-1	5306-01-194-0003	76	76
19207	12335109-2	5306-01-194-0004	76	71
19207	12335109-3	5306-01-194-7033	76	77
19207	12335110	5306-01-194-0002	76	47
19207	12335135	5365-01-184-1917	167	5
19207	12335136	5330-01-188-5125	167	7
19207	12335138	4820-01-184-1893	169	2
19207	12335139	4820-01-184-1892	169	3
19207	12335140	5365-01-184-1916	169	6
19207	12335141	5360-01-226-9204	169	4
19207	12335142	9905-01-183-2689	169	26
			172	3
19207	12335143	5365-01-183-2772	169	15
			172	2
19207	12335144	3040-01-183-8486	169	32
			172	19
19207	12335145	2530-01-183-6827	169	21
19207	12335146	3040-01-183-8481	169	23
19207	12335147		169	22
19207	12335148	5305-01-193-4083	169	24
19207	12335149	5340-01-183-6829	169	19
19207	12335150	5315-01-183-2786	169	18
19207	12335151	4730-01-183-8360	169	33
19207	12335153	2530-01-184-1895	169	28
			172	15
19207	12335154	2530-01-184-1894	169	36
			172	21
19207	12335154-1		169	38
			172	22
19207	12335157		169	12
			172	11
19207	12335158		169	11
			172	10
19207	12335159		169	10
			172	9
19207	12335160		174	2
19207	12335161		169	8
			172	7
19207	12335162-1	5365-01-183-2754	169	13
			172	12
19207	12335162-2	5365-01-183-2755	169	14
			172	13

CROSS-REFERENCE INDEXES

PART NUMBER INDEX

CAGEC	PART NUMBER	STOCK NUMBER	FIG.	ITEM
19207	12335163	5365-01-184-1955	169	29
			172	16
19207	12335164		169	31
			172	18
19207	12335168	4730-01-184-1887	170	14
19207	12335171	4820-01-184-1922	170	5
19207	12335172	5340-01-183-6836	170	1
19207	12335173-1	5310-01-229-8042	170	3
19207	12335173-2	5310-01-229-8043	170	4
19207	12335174	4820-01-184-1889	170	27
19207	12335175	4820-01-184-1890	170	22
19207	12335177	4820-01-183-6907	170	24
19207	12335178	4820-01-183-6908	170	17
19207	12335179	5365-01-184-1914	170	40
19207	12335180	5365-01-184-1915	170	25
19207	12335181	4820-01-184-1888	170	30
19207	12335182	5305-01-184-1913	170	33
19207	12335183	4820-01-183-8362	170	31
19207	12335184	5360-01-226-9202	170	32
19207	12335190	2530-01-184-1896	172	4
19207	12335190-1		172	5
19207	12335191	5340-01-185-0435	172	25
19207	12335241	4720-01-200-0815	88	17
19207	12335256		71	27
19207	12335257	5330-01-184-1920	71	28
19207	12335258		71	30
19207	12335259	5330-01-183-2706	71	31
19207	12335260	5306-01-201-8790	57	36
			59	2
19207	12335264-1	5365-01-229-2064	1	30
19207	12335264-2	5365-01-204-8910	1	48
19207	1233530-1		179	5
19207	12335303-2		177	8
19207	12335303-3		60	7
19207	12335303-4		61	7
19207	12335304-1		177	5
19207	12335304-2		60	4
19207	12335304-3		61	4
19207	12335305-1		179	8
19207	12335305-2		177	6
19207	12335305-3		60	5
19207	12335305-4		61	5
			177	13
19207	12335305-5		60	9
			61	11
19207	12335306		58	4
19207	12335308	5340-01-216-5652	58	30
19207	12335324	2540-01-202-8232	9	11
19207	12335326	2520-01-184-4800	151	8
			151	18
19207	12335327	5340-01-189-9820	71	1

CROSS-REFERENCE INDEXES

PART NUMBER INDEX

CAGEC	PART NUMBER	STOCK NUMBER	FIG.	ITEM
19207	12335332	5365-01-271-1809	151	12
19207	12335334	4820-01-201-1070	54	14
19207	12335364	4710-01-217-2561	104	21
19207	12335420	5340-01-249-4377	66	17
19207	12335422	5515-01-254-6563	65	9
19207	12335424	2590-01-252-3374	66	8
19207	12335426	5365-01-248-9632	66	5
19207	12335428-1	2540-01-254-5387	65	46
19207	12335428-2		65	48
19207	12335430	5340-01-246-0910	66	11
19207	12335438		65	33
19207	12335442	2510-01-254-6570	65	54
19207	12335447-1	2590-01-182-1263	17	4
19207	12335447-2	2590-01-182-1256	17	5
19207	12335447-3	2590-01-180-9915	17	2
19207	12335447-4	2590-01-182-1264	11	18
19207	12335447-5	6150-01-182-1266	11	20
19207	12335447-6	6140-01-182-1265	17	6
19207	12335448	2590-01-182-1258	11	9
19207	12335449	2590-01-182-1259	11	10
19207	12335450	2590-01-182-1257	11	16
19207	12335451	2590-01-180-9914	17	7
19207	12335452	5315-01-201-0997	109	20
19207	12335453	3040-01-201-1076	109	19
19207	12335454	2590-01-226-7376	71	9
19207	12335459	2540-01-215-6649	161	31
19207	12335460	5340-01-183-2777	71	25
07971	1234	5120-00-203-4811	191	1
19207	12343072	5330-01-186-5856	47	24
19207	12351768-1		170	16
19207	12352487	8140-01-217-1060	66	40
19207	12352500-1	2530-01-234-1917	155	2
19207	12352500-2	2530-01-226-0555	155	1
19207	12352503	2590-01-215-6648	66	27
19207	12352510	4720-01-194-0036	122	51
19207	12352511	5340-01-222-8733	66	30
19207	12352512	2540-01-254-5390	65	42
19207	12352519	6680-01-175-5552	141	1
19207	12352520	2520-01-183-8482	141	5
19207	12352521-1	2540-01-254-5389	65	43
19207	12352521-2		65	44
19207	12352522	5340-01-246-0916	66	9
19207	12352523	6150-01-201-1008	156	14
19207	12352545-1	2510-01-252-0283	66	42
19207	12352545-2		66	43
19207	12352546-1	2590-01-226-7375	71	26
19207	12352546-2	2590-01-226-7377	71	22
19207	12352546-3	2590-01-226-7373	71	19
19207	12352546-4	2590-01-226-7374	71	13
19207	12352549	5340-01-183-8469	71	21
19207	12352550	5340-01-183-8468	71	8

CROSS-REFERENCE INDEXES

PART NUMBER INDEX

CAGEC	PART NUMBER	STOCK NUMBER	FIG.	ITEM
19207	12352551	5340-01-183-8467	71	12
19207	12352552	5340-01-183-8466	71	18
19207	12352558-1		104	15
19207	12352558-2		104	22
19207	12352559	5515-01-254-6561	65	17
19207	12352561		162	22
19207	12352563	2540-01-255-5952	162	20
19207	12352570	5340-01-222-7997	7	9
19207	12352592	4720-01-182-9017	121	12
19207	12352593	4720-01-183-2745	122	55
19207	12352613	5340-01-216-5571	80	17
19207	12352614	4720-01-220-9889	77	1
19207	12352615	3040-01-216-5575	116	20
19207	12352618	4720-01-183-2746	122	12
19207	12352619	5340-01-224-3763	108	16
19207	12352620	4710-01-219-7918	122	26
19207	12352621	4710-01-219-7919	122	29
19207	12352622	4720-01-221-2068	77	48
19207	12352649	5340-01-216-5572	122	6
19207	12352650	5340-01-216-5573	122	10
19207	12352651	4720-01-194-0037	122	50
19207	12352652	4710-01-220-8406	122	24
19207	12352655	4730-01-221-7325	122	32
19207	12352677-1	4720-01-221-5561	122	35
19207	12352677-11	4720-01-192-9643	121	2
19207	12352677-12	4720-01-248-8819	121	7
19207	12352677-2	4720-01-223-7658	122	44
19207	12352677-3	4720-01-221-1451	122	13
19207	12352677-4	4720-01-248-8820	122	2
19207	12352677-5	4720-01-221-1449	108	24
19207	12352677-6	4720-01-221-1450	108	21
19207	12352677-7	4720-01-221-2067	121	14
19207	12352677-8	4720-01-220-9890	122	34
19207	12352679	9515-01-254-6562	65	18
19207	12352680	5340-01-218-7160	107	15
			108	22
19207	12355285	2920-01-182-1318	11	5
19207	12355287-1	4720-01-220-6651	108	7
19207	12355287-2	4720-01-220-6652	122	43
19207	12355287-3	4720-01-220-6650	77	7
19207	12355290	4710-01-238-1888	48	23
19207	12355291	4730-01-216-5574	108	2
19207	12355292	5905-01-216-5583	108	3
19207	12355293-1	4730-01-225-6873	77	5
19207	12355293-2	4730-01-221-7329	77	6
			108	25
			122	40
19207	12355299	2590-01-225-8386	57	26
19207	12355301	5340-01-216-7047	162	19
19207	12355302	4720-01-217-2828	107	6
19207	12355304		58	1

CROSS-REFERENCE INDEXES

PART NUMBER INDEX

CAGEC	PART NUMBER	STOCK NUMBER	FIG.	ITEM
19207	12355311	5670-01-219-5864	66	33
19207	12355316	6135-01-217-3292	16	17
19207	12355324		67	4
19207	12355325	9535-01-217-3221	67	3
19207	12355345	2590-01-228-5802	188	12
19207	12355351	4720-01-246-0992	189	10
19207	12355352	4720-01-252-8425	189	11
19207	12355353	4730-01-270-7650	189	26
19207	12355368-1		112	8
19207	12355368-2		112	6
19207	12355368-3		65	22
19207	12355369-1		66	38
19207	12355369-2		112	1
19207	12355369-3		65	45
			65	47
19207	12355369-4		66	44
19207	12355383	2540-01-216-5568	112	7
19207	12355385	3040-01-171-8265	1	39
19207	12355395	3040-01-255-1605	138	20
19207	12355423	5340-01-254-6556	48	25
19207	12355436	5365-01-230-0200	188	7
19207	12355437	5120-01-227-7044	188	3
19207	12355438	5315-01-229-9007	188	27
19207	12355441	5120-01-227-7042	188	32
19207	12355445	4030-01-182-8931	57	31
			69	3
19207	12355451	5120-01-227-8480	188	8
19207	12355452	5120-01-228-3162	188	35
19207	12355454	5120-01-229-9134	188	26
19207	12355460	2510-01-228-5805	76	12
19207	12355485	2590-01-254-6580	33	1
19207	12355487	5995-01-254-6579	13	22
19207	12355496	2510-01-220-6378	57	13
			66	20
19207	12355497	5307-01-230-8845	57	11
			66	21
19207	12355501	5340-01-222-7934	188	4
19207	12355510-1	5120-01-227-7043	188	29
19207	12355511-4	5120-01-222-7938	188	1
19207	12355511-5	5120-01-222-7939	188	2
19207	12355514-1	5340-01-231-9143	68	8
19207	12355514-2	2510-01-231-9144	68	2
19207	12355515	5120-01-222-7930	188	41
19207	12355519	5315-01-229-9703	188	39
19207	12355521	5340-01-220-6379	65	30
19207	12355523	5120-01-222-7932	188	28
19207	12355529	5340-01-228-5803	65	29
19207	12355536	5120-01-222-7933	188	30
19207	12355538	2540-01-216-7046	162	13
19207	12355559	5120-01-229-9135	188	40
19207	12355565	3040-01-227-8895	138	4

CROSS-REFERENCE INDEXES

PART NUMBER INDEX

CAGEC	PART NUMBER	STOCK NUMBER	FIG.	ITEM
19207	12355576	2590-01-225-8387	76	22
19207	12355577	5995-01-254-6581	13	24
19207	12355579	4720-01-289-8226	77	136
19207	12355580	4720-01-289-8227	77	149
19207	12355582	2590-01-224-9241	188	13
19207	12355583	4720-01-289-8228	77	92
19207	12355640	2510-01-180-5558	76	13
19207	12357134	4720-01-289-8229	77	116
19207	12357135	4720-01-242-7752	77	16
19207	12357136-1	4720-01-289-8238	114	4
19207	12357136-2	4720-01-289-8235	150	7
19207	12357137	4720-01-289-8230	77	84
19207	12357139	4720-01-289-8231	77	97
19207	12357141	4720-01-289-8232	77	25
19207	12357142	4720-01-296-2976	180	11
19207	12357143	4720-01-296-2978	119	37
19207	12357144	4720-01-296-8451	119	13
19207	12357145	4720-01-289-8233	77	24
19207	12357146	6695-01-252-9819	27	5
19207	12357148	5340-01-239-1863	24	11
19207	12357149	6620-01-248-0358	28	14
19207	12357150	6685-01-248-1707	28	15
19207	12357151	6685-01-248-1706	28	17
19207	12357155	4720-01-296-2977	150	4
19207	12357156	4720-01-306-7492	108	20
19207	12357157	4720-01-289-8236	139	3
19207	12357158-1	3120-01-264-6005	57	43
19207	12357158-2	3120-01-264-6006	57	52
19207	12357159	4720-01-289-8234	150	9
19207	12357160	4720-01-289-8237	150	10
19207	12357162	4720-01-296-2975	122	60
19207	12357165	5330-01-254-4385	48	24
19207	12357177	2590-01-239-1664	57	46
19207	12357179	2510-01-231-3821	9	6
19207	12357183	2510-01-256-0039	66	4
19207	12357185-1	2540-01-254-6573	65	21
19207	12357186	9905-01-246-0925	76	9
19207	12357193	9530-01-311-1587	165	13
19207	12357194	2540-01-239-1662	56	1
19207	12357195	2590-01-239-1663	56	5
19207	12357198	5340-01-217-1074	162	24
19207	12357199	5340-01-217-1073	162	14
19207	12357200	9535-01-181-6344	162	23
19207	12357203	5340-01-246-5830	66	24
19207	12357204	2590-01-239-1974	11	6
19207	12357205	6150-01-239-1719	11	7
19207	12357206	9905-01-246-6653	26	3
19207	12357211	2590-01-239-1973	11	8
19207	12357212	2590-01-252-0285	159	9
19207	12357213-1	5340-01-254-6544	159	6
19207	12357213-2	5340-01-254-6545	159	10

CROSS-REFERENCE INDEXES

PART NUMBER INDEX

CAGEC	PART NUMBER	STOCK NUMBER	FIG.	ITEM
19207	12357221	5340-01-245-2494	162	18
19207	12357227	2590-01-246-0909	65	51
19207	12357230	6150-01-254-6577	159	23
19207	12357235	9515-01-239-1940	7	22
19207	12357236	9515-01-239-1941	7	24
19207	12357241	2590-01-245-7560	109	30
19207	12357242	2990-01-279-1014	91	28
19207	12357244	2510-01-245-2446	162	21
19207	12357263	2510-01-254-6512	164	8
19207	12357264	5340-01-271-0936	165	9
19207	12357265	2540-01-254-6575	165	1
19207	12357266	2540-01-254-6574	164	12
19207	12357269	5340-01-256-0981	165	28
19207	12357273	5340-01-250-5688	163	1
19207	12357280-1	4720-01-289-8216	119	11
19207	12357280-10	4720-01-289-8221	119	42
19207	12357280-11	4720-01-289-8222	119	33
19207	12357280-12	4720-01-289-8214	119	24
19207	12357280-2	4720-01-289-8217	119	50
19207	12357280-3	4720-01-289-8223	119	43
19207	12357280-4	4720-01-289-8224	119	35
19207	12357280-5	4720-01-289-8225	119	51
19207	12357280-6	4720-01-289-8218	119	36
19207	12357280-7	4720-01-289-8219	119	48
19207	12357280-8	4720-01-289-8215	119	30
19207	12357280-9	4720-01-289-8220	119	32
19207	12357282	3040-01-254-6552	58	20
19207	12357338	7690-01-248-4614	165	15
19207	12357341	3010-01-252-9796	165	4
19207	12357344	7690-01-248-4615	165	8
19207	12357345	7690-01-252-9419	165	5
19207	12357346	7690-01-248-4616	165	27
19207	12357347	7690-01-248-4618	163	12
19207	12357348	7690-01-248-4619	163	13
19207	12357349	7690-01-251-8273	163	8
19207	12357350	7690-01-248-4617	165	14
19207	12357357	2990-01-246-0917	104	2
19207	12357359	2540-01-246-0918	104	5
19207	12357360-1	4720-01-306-5704	107	3
19207	12357360-2	4720-01-289-8239	107	7
19207	12357363-1	5340-01-245-7599	107	9
19207	12357363-2	5340-01-245-7600	107	10
19207	12357364	3040-01-246-0998	65	56
19207	12357366	2510-01-252-9797	66	37
19207	12357374		75	5
19207	12357375	5340-01-286-9807	163	19
19207	12357376	5340-01-286-9808	163	18
19207	12357408	5306-01-287-2259	69	7
19207	12357409	2540-01-279-1013	57	32
			69	1
19207	12357414		77	11

CROSS-REFERENCE INDEXES

PART NUMBER INDEX

CAGEC	PART NUMBER	STOCK NUMBER	FIG.	ITEM
19207	12357418	4710-01-254-6553	137	21
19207	12357421		77	75
19207	12357425	2540-01-254-6571	65	26
19207	12357430	5340-01-326-7776	122	22
19207	12357431	5340-01-245-2527	137	6
19207	12357432	5340-01-245-2528	137	3
07971	1236	5120-00-203-4810	191	2
19207	12362035	3040-01-264-9691	137	9
19207	12362036	5340-01-252-9793	137	26
19207	12362059	2590-01-246-0957	63	26
19207	12362060	5360-01-257-9244	62	6
19207	12362070	5340-01-279-0983	91	20
19207	12362072	2540-01-314-8046	7	12
19207	12362073	2540-01-298-8399	65	26
19207	12362092	2540-01-292-9059	66	51
19207	12362094	9535-01-292-3028	67	6
19207	12362095	9535-01-292-3029	67	8
19207	12362096	9535-01-292-3027	67	7
19207	12362098		58	12
19207	12362099	5340-01-292-3026	65	12
19207	12362100	2540-01-293-3374	65	31
19207	12362101	5340-01-292-3241	65	55
19207	12362102	5340-01-292-3242	65	58
19207	12362112	2510-01-290-3023	9	4
19207	12362113	2510-01-291-2992	9	1
19207	12362119	2510-01-291-2963	10	24
19207	12362126	2510-01-290-3020	10	17
19207	12362132		10	12
19207	12362136		10	21
19207	12362137		10	20
19207	12362149	5140-01-305-3428	191	10
19207	12362150	5140-01-305-3429	191	11
19207	12362155	5315-01-307-5942	63	22
19207	12362156	2540-01-274-1104	63	21
19207	12362157	2510-01-275-9225	63	6
19207	12362163	5340-01-281-2918	63	3
19207	12362165-1	5340-01-284-8141	63	61
19207	12362165-2	5340-01-284-8142	63	61
19207	12362165-3	5340-01-284-8143	63	61
19207	12362166	2540-01-274-0996	63	27
19207	12362167	2590-01-279-9942	63	25
19207	12362168	2510-01-281-2871	63	58
19207	12362169	2540-01-274-1103	63	8
19207	12362170	2540-01-274-1105	63	11
19207	12362171	2540-01-274-1166	63	28
19207	12362172	2510-01-274-1176	63	40
19207	12362187	3040-01-281-2915	63	41
19207	12362188	5360-01-274-1179	63	4
19207	12362189	2510-01-274-0995	63	62
19207	12362192-1	5365-01-284-8136	63	15
19207	12362192-2	5365-01-284-8137	63	15

CROSS-REFERENCE INDEXES

PART NUMBER INDEX

CAGEC	PART NUMBER	STOCK NUMBER	FIG.	ITEM
19207	12362194		62	8
19207	12362195	2540-01-274-1167	62	14
19207	12362200	2540-01-274-0598	62	15
19207	12362200-1		63	5
19207	12367590	2540-01-298-3982	159	12
19207	12367607	2590-01-326-8178	189	30
19207	12367608		189	31
19207	12367609	2540-01-298-3975	189	29
19207	12367614		13	6
19207	12367615		13	13
19207	12367616		13	12
19207	12367617		13	1
19207	12367674	5140-01-298-3983	192	24
19207	12367692	2540-01-330-8831	68	9
19207	12367693	2540-01-330-8832	68	7
19207	12367699		72	5
19207	12367729		68	14
19207	12367739		8	34
19207	12369101	2540-01-313-7821	23	9
19207	12369102	2920-01-291-2996	11	1
19207	12369103	2540-01-312-8366	165	22
19207	12369120		152	11
19207	12369133		9	14
06085	12369134-1		60	11
			61	13
06085	12369134-2		177	15
06085	12369135-1		179	9
06085	12369135-2		177	14
19207	12369135-3		60	10
			61	12
19207	12369152		65	16
19207	12369153		65	11
19207	12369154	4710-01-316-4923	78	18
19207	12369155	4710-01-316-4922	78	17
19207	12369156	4710-01-316-7426	78	3
19207	12379342		63	55
19207	12379346	3040-01-326-7771	63	47
19207	12379353	5340-01-326-7775	63	31
19207	12379357		63	54
19207	12379359		63	35
19207	12379360		63	45
19207	12379362		63	42
19207	12379365		63	56
19207	12379369	5340-01-326-8177	63	34
19207	12379433		68	6
19207	12379435	3040-01-326-7772	145	4
19207	12379438		8	8
19207	12379439	9530-01-326-7774	8	9
19207	12379441		144	18
19207	12379442		8	5
19207	12379443		8	10

CROSS-REFERENCE INDEXES

PART NUMBER INDEX

CAGEC	PART NUMBER	STOCK NUMBER	FIG.	ITEM
19207	12379444-1		144	21
19207	12379444-2		144	21
19207	12379444-3		144	21
19207	12379446	2510-01-330-8087	63	63
19207	12379450		63	70
19207	12379451		63	64
19207	12379457		62	5
19207	12379458		188	44
07971	1240	5120-00-203-4808	191	4
30106	1242	5120-00-203-4807	191	5
07971	1244	5120-00-203-4806	191	6
07971	1248	5120-00-203-4804	191	7
30106	1260	5120-00-203-4799	191	8
05842	1261.006	2530-01-208-7033	86	29
05842	1263.006	2530-01-208-7034	86	22
05842	1268.006	5365-01-191-8015	86	45
07971	1272S	5120-00-203-4792	191	9
62983	1276	5305-00-153-8694	85	6
09704	130063	2540-01-193-6778	161	11
09704	130124	2540-01-193-6783	161	10
43334	1309WB	3110-01-184-1905	116	10
05842	1313.503		86	28
97403	13204E2472	3120-01-183-2723	60	22
			61	21
97403	13204E2492	5330-01-193-0228	9	17
97403	13204E2493	5365-01-194-4936	9	16
97403	13204E2499	5330-01-178-9325	152	36
97403	13204E2509	3040-01-164-7902	20	14
97403	13204E2511	2590-01-182-4138	33	2
97403	13204E2512	5905-01-192-2803	29	6
97403	13204E2513	5905-01-192-4955	29	5
97403	13204E2514	5905-01-192-4956	29	4
97403	13204E2515	5905-01-191-9595	29	3
97403	13204E2516	5905-01-192-0289	29	2
97403	13204E2519		28	1
97403	13204E2522	5905-01-192-0284	26	1
97403	13204E2523	5905-01-192-2482	26	2
97403	13204E2525	5905-01-192-0285	26	13
97403	13204E2526	5905-01-192-2804	26	12
97403	13204E2527	5905-01-192-0286	26	11
97403	13204E2528	5905-01-192-0287	26	10
97403	13204E2549	4730-01-179-4110	77	62
97403	13204E2551		50	32
97403	13204E2558	5340-01-193-1744	85	13
97403	13204E2560	4810-01-154-9991	166	1
97403	13204E2561	4810-01-154-9992	166	3
97403	13204E2644	5315-01-184-4868	57	44
97403	13204E2650-1	3120-01-195-7990	57	50
97403	13204E2650-2	3120-01-194-9293	57	47
97403	13204E2650-3	3120-01-196-8055	57	28
97403	13204E2652	5315-01-184-4841	57	51

CROSS-REFERENCE INDEXES

PART NUMBER INDEX

CAGEC	PART NUMBER	STOCK NUMBER	FIG.	ITEM
97403	13204E2680		155	4
97403	13204E2730-1	5310-01-166-2617	154	6
			155	5
97403	13204E2730-2	5310-01-204-6862	153	3
97403	13204E2864	3120-01-195-7988	57	5
97403	13204E2894	5330-01-184-4881	BULK	33
97403	13204E2894-1		71	11
97403	13204E2894-2		71	7
97403	13204E2894-3		71	24
97403	13204E2943	5315-01-184-4842	57	3
97403	13204E2944	3120-01-184-4859	57	4
97403	13204E2945	5305-01-195-1594	57	2
97403	13204E2972	3110-01-179-7556	58	8
97403	13204E2973	2590-01-155-0106	58	13
97403	13204E2974	2590-01-155-0107	58	7
97403	13204E3300	5905-01-174-0557	6	5
97403	13204E3301	5905-01-174-0558	6	10
97403	13204E3398	5306-01-179-9462	152	41
97403	13204E3407	3020-01-183-8404	116	8
97403	13204E3408	3020-01-183-8400	116	4
97403	13204E3409	2520-01-183-8345	116	12
97403	13204E3410	3020-01-183-8401	116	7
97403	13204E3415	3040-01-183-8449	116	17
97403	13204E3416	3020-01-183-8402	116	30
97403	13204E3530	5330-01-165-1370	107	24
97403	13204E3547	5330-01-165-1355	115	3
97403	13204E3548	3040-01-183-2758	115	10
97403	13204E3555	5310-01-197-2398	91	22
97403	13204E3629	5310-01-180-8601	84	14
97403	13204E3688	3040-01-179-9217	76	33
97403	13204E3691	3040-01-179-9218	76	32
97403	13204E3698	2590-01-179-9052	76	49
97403	13204E3768	4710-01-192-8519	78	16
97403	13204E3917	3830-01-184-4851	57	45
97403	13204E3925	3830-01-184-4774	57	9
97403	13211E8613	3830-01-184-4776	57	41
97403	13211E8614	3830-01-184-4775	57	37
97403	13211E8616	5305-01-194-3001	57	30
97403	13211E8624		71	20
97403	13211E8625		71	14
97403	13211E8627	5310-01-197-4491	70	16
97403	13211E8628	2590-01-184-4783	61	17
97403	13211E8634	5315-01-180-8641	60	20
			61	15
			176	1
97403	13211E8638		187	2
97403	13211E8639	2590-01-184-4786	68	11
97403	13211E8643	3830-01-184-4977	57	40
97403	13211E8644	3805-01-156-6223	59	1
97403	13211E8645	3805-01-164-1975	59	6
97403	13211E8646	3805-01-164-0143	59	5

CROSS-REFERENCE INDEXES

PART NUMBER INDEX

CAGEC	PART NUMBER	STOCK NUMBER	FIG.	ITEM
97403	13211E8648	3120-01-183-8417	70	17
97403	13211E8658	5365-01-186-8009	188	25
97403	13211E8671	2510-01-163-2703	68	4
97403	13211E8687	2510-01-182-8771	9	20
97403	13211E8699	4320-01-183-6818	73	21
97403	13211E8700	2520-01-154-9993	152	1
97403	13211E8701	3040-01-171-0143	152	8
97403	13211E8702	3040-01-171-0142	152	24
97403	13211E8703	3020-01-201-4031	152	12
97403	13211E8704	3020-01-176-8614	152	28
97403	13211E8705	3040-01-176-1210	152	16
97403	13211E8706	2520-01-169-2421	152	40
97403	13211E8707	3020-01-179-1030	152	15
97403	13211E8708	3040-01-179-1410	152	5
97403	13211E8710	3020-01-179-8072	152	13
97403	13211E8711	3020-01-177-5394	152	7
97403	13211E8712	5310-01-243-9437	152	34
97403	13211E8713	3040-01-171-8272	152	22
97403	13211E8714	2520-01-193-6742	152	20
97403	13211E8717	2520-01-222-7588	152	19
97403	13211E8718	5306-01-177-5878	152	45
97403	13211E8718-1		152	47
97403	13211E8718-2	5306-01-185-0170	152	46
97403	13211E8750	2520-01-171-0027	115	11
97403	13211E8751	3040-01-183-8485	116	1
97403	13211E8754	2520-01-183-2641	116	22
97403	13211E8755	2520-01-183-8350	116	2
97403	13211E8756	3020-01-183-8403	116	27
97403	13211E8757		116	24
97403	13211E8761	4710-01-183-8443	114	8
97403	13211E8762	4710-01-183-8444	114	6
97403	13211E8764	4710-01-183-6868	114	11
97403	13211E8765	4710-01-183-6869	114	10
97403	13211E8769	5340-01-183-2736	114	17
97403	13211E8800	2590-01-181-6164	84	1
97403	13211E8801		84	10
97403	13211E8875	4710-01-192-8520	78	55
97403	13211E8876	4710-01-192-9815	78	54
97403	13211E8877	4710-01-192-9816	78	52
97403	13211E8878	4710-01-192-9817	78	53
97403	13211E8879	4710-01-192-8521	78	51
97403	13211E8880	4710-01-192-8522	78	30
97403	13211E8881	4710-01-192-8523	78	9
97403	13211E8882	4710-01-192-8524	78	25
97403	13211E8883	4710-01-192-9818	78	31
97403	13211E8910	5340-01-194-5302	84	28
97403	13211E8914-2	4730-01-179-7578	88	20
97403	13211E8914-5	4730-01-194-0148	78	89
97403	13211E8916-7	4730-01-196-4218	77	78
97403	13211E8928	4710-01-192-9820	78	22
97403	13211E8929	4710-01-192-9821	78	21

CROSS-REFERENCE INDEXES

PART NUMBER INDEX

CAGEC	PART NUMBER	STOCK NUMBER	FIG.	ITEM
97403	13211E8970	5340-01-232-3913	161	23
97403	13211E8972	3040-01-179-1347	136	21
97403	13211E8973	2530-01-246-1227	136	28
97403	13211E8974	3040-01-179-1348	136	22
97403	13211E8976	5306-01-179-7600	136	25
97403	13211E8977	3040-01-179-1349	136	3
97403	13211E8980	3040-01-179-1344	136	8
97403	13211E8981	2530-01-178-5403	136	10
97403	13211E8982	2530-01-171-0099	136	12
97403	13211E8986	5340-01-171-0053	1	41
97403	13211E8987	3040-01-177-8601	1	9
97403	13211E8989	3040-01-177-4007	1	34
97403	13211E8990	3040-01-176-2975	1	46
97403	13211E8992	5306-01-171-0048	1	47
97403	13211E8997	9905-01-201-0976	76	3
97403	13211E8999	2590-01-171-8246	1	16
97403	13211E9018-12	4730-00-225-0699	77	43
97403	13211E9018-5	4730-01-088-9643	77	13
97403	13211E9018-8	4730-00-495-3409	77	42
97403	13211E9018-9	4730-01-193-2587	121	15
97403	13211E9020	5360-01-177-4881	1	21
97403	13211E9025	5340-01-189-6465	28	2
97403	13211E9046	5330-01-197-4422	20	3
97403	13211E9059	2920-01-182-1320	11	4
97403	13211E9062	2590-01-184-4784	66	32
97403	13211E9079	5340-01-201-0964	76	26
97403	13211E9093	6150-01-182-1262	28	5
97403	13211E9102	2520-01-182-8774	151	7
97403	13211E9103	3120-01-184-4860	140	4
			140	8
			140	14
97403	13211E9105	2520-01-184-4821	151	17
97403	13211E9107	2520-01-184-4799	151	4
97403	13211E9107-1		151	5
97403	13211E9108	3040-01-183-6876	151	21
97403	13211E9109	3040-01-183-8450	151	14
97403	13211E9118	5340-01-182-8775	140	3
97403	13211E9122	6680-01-182-1280	20	15
97403	13211E9156	5330-01-192-9330	151	6
97403	13211E9161	4710-01-176-9631	2	52
97403	13211E9162	4710-01-176-9632	2	2
97403	13211E9207	2530-01-167-8106	154	1
97403	13211E9213	3020-01-156-6212	153	5
97403	13211E9217	2530-01-169-0033	174	7
97403	13211E9220	2530-01-155-0134	175	13
97403	13211E9222	3040-01-183-6891	175	9
97403	13211E9223	5306-01-197-6594	175	10
97403	13211E9224	5310-01-216-3677	175	2
97403	13211E9225		155	3
97403	13211E9226	5315-01-156-6208	155	9
97403	13211E9231	5330-01-183-6839	175	4

CROSS-REFERENCE INDEXES

PART NUMBER INDEX

CAGEC	PART NUMBER	STOCK NUMBER	FIG.	ITEM
97403	13211E9245	2590-01-183-6824	72	1
97403	13211E9255	5315-01-196-6783	178	17
97403	13211E9256	5315-01-197-6264	178	19
97403	13211E9331	4010-01-185-0406	188	21
97403	13211E9350	5306-01-195-6633	137	5
97403	13211E9351-1	5306-01-195-6634	137	17
97403	13211E9351-3	5307-01-184-5875	1	38
97403	13211E9351-4	5306-01-179-9528	136	6
97403	13211E9356	3040-01-060-4770	137	15
97403	13211E9358	5340-01-204-0375	137	20
			138	23
97403	13211E9362	5330-01-189-9825	9	5
97403	13211E9386	5330-01-183-2707	71	4
97403	13211E9387	5340-01-184-6407	71	5
97403	13211E9388	5340-01-180-8609	78	5
97403	13211E9401	5365-01-208-6855	76	5
97403	13211E9411	3040-01-186-8002	76	42
97403	13211E9415	2590-01-180-5556	76	19
97403	13211E9450	5340-01-184-4839	140	13
97403	13211E9485	5365-01-194-8529	140	11
97403	13211E9486	5330-01-165-1371	117	18
97403	13211E9521	5340-01-184-4822	140	7
97403	13211E9533	2590-01-178-5723	51	8
97403	13211E9545	5307-01-185-3544	8	17
97403	13211E9547	4820-01-169-2512	2	32
97403	13211E9554	4710-01-183-2783	105	6
97403	13211E9555	4710-01-187-0997	105	11
97403	13211E9556	4710-01-183-2784	105	13
97403	13211E9561	2590-01-179-7527	87	1
97403	13211E9562	2590-01-179-7528	87	6
97403	13211E9563	4730-01-194-0144	77	81
			88	2
97403	13211E9564	4710-01-179-7634	88	15
97403	13211E9565	4710-01-179-9199	88	14
97403	13211E9566	4710-01-179-9200	88	18
97403	13211E9568	5315-01-194-0814	145	18
			145	28
97403	13211E9569	5315-01-194-0815	145	10
			145	23
97403	13211E9571	4030-01-209-7476	182	28
97403	13211E9573	2540-01-189-6472	182	27
97403	13211E9579	2510-01-192-8275	10	23
97403	13214E1964	5330-01-182-8916	151	1
97403	13214E1968	5340-01-181-6133	78	64
97403	13214E1969	5340-01-181-6134	78	69
97403	13214E1970	5340-01-181-6136	78	28
97403	13214E1971	5340-01-181-6137	78	58
97403	13214E1972	5340-01-181-6138	78	10
97403	13214E1973	5340-01-181-6139	78	79
97403	13214E1974	4820-01-194-0196	79	1
97403	13214E1975	4710-01-186-8000	78	74

CROSS-REFERENCE INDEXES

PART NUMBER INDEX

CAGEC	PART NUMBER	STOCK NUMBER	FIG.	ITEM
97403	13214E1976-1	4710-01-200-9191	78	92
97403	13214E1977	4710-01-192-9822	78	90
97403	13214E1978	4710-01-192-8525	78	63
97403	13214E1979	4710-01-194-0333	78	70
97403	13214E1980	4710-01-189-9807	78	91
97403	13214E1981	4710-01-192-8526	78	97
97403	13214E1982	4710-01-192-8527	78	62
97403	13214E1983	4720-01-195-3837	77	137
97403	13214E1984	5340-01-180-5562	78	40
97403	13214E1985	5340-01-180-5563	78	80
97403	13214E1987	5340-01-196-0641	77	70
97403	13214E1988	5120-01-222-7931	188	31
97403	13214E1993	4730-01-179-2489	152	9
97403	13214E1997	2910-01-170-9547	51	6
97403	13214E2003	2910-01-180-2991	51	11
97403	13214E2055	2590-01-204-2588	76	25
97403	13214E2064	2920-01-182-1321	11	3
97403	13214E2067	2540-01-178-7116	161	37
97403	13214E2068	5360-01-178-2192	161	29
97403	13214E2069	5340-01-180-6681	161	3
97403	13214E2070	2590-01-178-3142	161	8
97403	13214E2071	5340-01-180-6698	161	39
97403	13214E2072	5315-01-181-1687	161	28
97403	13214E2073	2540-01-178-7083	161	2
97403	13214E2074	3110-01-170-9548	161	27
97403	13214E2076	5365-01-183-8453	116	5
97403	13214E2079	4710-01-183-6870	114	19
97403	13214E2081	4730-01-183-8429	114	9
97403	13214E2106	5310-01-176-4000	152	26
97403	13214E2107-1	5340-01-176-7491	152	4
97403	13214E2107-2	5340-01-177-1050	152	25
97403	13214E2107-3	5340-01-178-6107	152	2
97403	13214E2109	3040-01-222-7586	152	29
97403	13214E2114	2530-01-183-6905	175	5
97403	13214E2119	5315-01-177-9865	152	21
97403	13214E2129	5340-01-178-6108	152	18
97403	13214E2137	5340-01-213-1353	76	29
97403	13214E2146	3040-01-179-1345	8	20
97403	13214E2186	2520-01-183-8347	91	27
97403	13214E2208	5905-01-201-0974	76	8
97403	13214E2258	4730-01-195-0353	114	13
			139	6
97403	13214E2267	2920-01-182-1322	11	2
97403	13214E2272	5340-01-212-0433	76	73
97403	13214E2285	5340-01-181-6135	78	26
97403	13214E2303	5340-01-178-2201	8	26
97403	13214E2316	5365-01-177-0952	8	36
97403	13214E2317	5340-01-180-2603	8	35
97403	13214E2325		71	10
97403	13214E2326		71	23
97403	13214E2340	5330-01-165-1369	115	8

CROSS-REFERENCE INDEXES

PART NUMBER INDEX

CAGEC	PART NUMBER	STOCK NUMBER	FIG.	ITEM
97403	13214E2360-3	5340-01-182-9023	57	27
97403	13214E2378	2590-01-183-8368	58	18
97403	13214E2379	3805-01-183-2785	58	15
97403	13214E2392	2590-01-185-0173	119	16
97403	13214E2397	3040-01-201-1145	138	18
97403	13214E2400	5340-01-180-8599	77	90
97403	13214E2403	5340-01-273-8821	57	56
97403	13214E2411	5340-01-195-3387	77	89
97403	13214E2412	2590-01-184-4778	57	15
97403	13214E2416-3	4730-01-193-7688	78	45
97403	13214E2416-5	4730-01-193-7689	78	84
97403	13214E2429	2590-01-179-7529	119	3
97403	13214E2452	5905-01-183-2687	75	3
97403	13214E2455	5330-01-183-6853	151	13
97403	13214E2457-10	4720-01-249-1383	88	11
97403	13214E2457-14	4720-01-249-2025	88	13
97403	13214E2457-2	4720-01-181-6461	77	15
97403	13214E2457-3	4720-01-181-6462	77	56
97403	13214E2457-4	4720-01-182-9012	77	79
97403	13214E2457-5	4720-01-182-9013	77	30
97403	13214E2457-6	4720-01-182-9014	88	6
97403	13214E2457-7	4720-01-182-9015	88	7
97403	13214E2457-9	4720-01-249-2026	77	145
			88	10
97403	13214E2468	5307-01-195-5949	138	14
97403	13214E2472	4720-01-180-5629	77	99
97403	13214E2473-1	4720-01-182-4249	77	26
97403	13214E2475	5310-01-200-7005	69	6
			70	18
97403	13214E2478-1	4720-01-179-9150	77	94
97403	13214E2481	2590-01-182-8768	57	53
97403	13214E2482	2590-01-185-0169	57	29
97403	13214E2483	2590-01-182-8767	57	35
97403	13214E2484	2590-01-182-8769	57	42
97403	13214E2486	4720-01-181-6167	77	114
97403	13214E2495-1	4720-01-192-9637	77	140
97403	13214E2495-2	4720-01-195-3838	77	111
97403	13214E2495-4	4720-01-195-8497	77	127
97403	13214E2495-5	4720-01-195-3840	77	119
97403	13214E2497-1	4730-01-194-1983	77	129
			78	93
97403	13214E2497-2	4730-01-194-0147	77	139
97403	13214E2497-3	4730-01-194-1984	78	73
97403	13214E2497-4	4730-01-194-1985	78	85
97403	13214E2500-2	4720-01-289-8213	77	130
97403	13214E2501-1	4720-01-195-3841	77	113
97403	13214E2501-2	4720-01-195-9125	77	146
97403	13214E2501-3	4720-01-195-3842	77	103
97403	13214E2501-4	4720-01-195-3843	77	148
97403	13214E2501-5	4720-01-195-3844	77	120
97403	13214E2515	5340-01-187-0904	57	54

CROSS-REFERENCE INDEXES

PART NUMBER INDEX

CAGEC	PART NUMBER	STOCK NUMBER	FIG.	ITEM
97403	13214E2536-1	3040-01-179-5795	1	4
97403	13214E2536-2	3040-01-181-0306	1	7
97403	13214E2551		77	12
97403	13214E2553	5340-01-180-5560	78	34
97403	13214E2554	5340-01-180-5561	78	33
97403	13214E2559	5365-01-185-0337	167	10
97403	13214E2562	5305-01-183-8422	173	2
97403	13214E2582	5330-01-193-0208	41	4
97403	13214E2601	2590-01-184-4789	68	17
97403	13214E2603	2590-01-184-4788	68	16
97403	13214E2608	5340-01-181-5759	2	35
97403	13214E2622	5905-01-183-2688	75	2
97403	13214E2631	4730-01-179-7530	119	41
97403	13214E2634	5340-01-181-6494	141	12
97403	13214E2644-1	3120-01-181-1625	1	49
			137	32
			138	21
97403	13214E2644-2	3120-01-181-5080	136	2
97403	13214E2644-3	3120-01-181-1628	136	11
97403	13214E2654	5330-01-184-4882	64	13
97403	13214E2658	2815-01-180-5564	82	1
97403	13214E2662	5330-01-197-2591	86	1
97403	13214E2664	5315-01-184-4785	57	8
97403	13214E2669	2510-01-184-4826	91	24
97403	13214E2671	5365-01-183-2749	91	23
97403	13214E2673	3040-01-156-8106	58	14
97403	13214E2685	2590-01-171-8245	1	28
97403	13214E2687	6220-01-182-1082	30	14
97403	13214E2688	5340-01-182-1080	30	17
97403	13214E2690	5330-01-184-4898	57	61
97403	13214E2691	5330-01-184-4899	57	62
97403	13214E2692	5330-01-184-4900	57	67
97403	13214E2693	5330-01-184-4901	57	64
97403	13214E2694	5330-01-184-4902	57	68
97403	13214E2695	5330-01-182-9005	57	70
97403	13214E2696	5330-01-184-4903	57	63
97403	13214E2702	6150-01-182-1260	35	7
97403	13214E2703	6150-01-182-1267	33	3
97403	13214E2709	5306-01-238-1479	80	3
97403	13214E2714-1	5340-01-186-8017	77	125
97403	13214E2714-2	5340-01-186-8018	77	124
97403	13214E2715	4730-01-180-8608	77	105
97403	13214E2716	5330-01-200-3967	77	106
97403	13214E2717	5340-01-182-8987	79	15
97403	13214E2728	5340-01-181-6159	79	8
97403	13214E2733	5330-01-197-2592	84	9
97403	13214E2734	2930-01-181-6177	84	5
97403	13214E2735	2590-01-180-8602	84	8
97403	13214E2736-1	4730-01-180-8605	79	11
97403	13214E2736-2	4730-01-180-8606	79	12
97403	13214E2737	5330-01-183-2741	57	69

CROSS-REFERENCE INDEXES

PART NUMBER INDEX

CAGEC	PART NUMBER	STOCK NUMBER	FIG.	ITEM
97403	13214E2739	4710-01-192-8528	78	76
97403	13214E2750	4710-01-179-7618	78	41
97403	13214E2751	4710-01-179-7619	78	57
97403	13214E2752	4710-01-179-7620	78	43
97403	13214E2753	4710-01-179-7621	78	56
97403	13214E2754	4710-01-179-7622	78	42
97403	13214E2755	4710-01-179-7623	78	60
97403	13214E2760	5340-01-183-2778	71	29
97403	13214E2763	5340-01-195-5915	79	13
97403	13214E2764	5340-01-195-5914	79	10
97403	13214E2765	4730-01-180-8600	79	9
97403	13214E2766	4730-01-180-8607	79	14
97403	13214E2768	2540-01-183-6823	178	1
97403	13214E2769-1	5365-01-183-2750	178	8
97403	13214E2769-2	5365-01-183-2751	178	9
97403	13214E2769-3	5365-01-183-2752	178	10
97403	13214E2769-4	5365-01-183-2753	178	11
97403	13214E2770	5365-01-184-1947	178	12
97403	13214E2771	5340-01-183-8470	178	2
97403	13214E2772		178	13
97403	13214E2773	3040-01-183-8356	178	16
97403	13214E2775	2540-01-183-8355	178	18
97403	13214E2777	2530-01-171-0032	136	15
97403	13214E2780	5315-01-194-9347	85	19
97403	13214E2781	5330-01-189-9781	85	17
97403	13214E2782	2590-01-180-5559	85	18
97403	13214E2783	2520-01-183-8351	116	18
97403	13214E2789	5330-01-192-9336	84	18
97403	13214E2790	4710-01-204-8143	84	15
97403	13214E2793	5315-01-183-6832	178	7
97403	13214E2797	4720-01-192-9639	77	10
97403	13214E2802	4820-01-182-4215	78	86
97403	13214E2814	4710-01-179-7624	78	94
97403	13214E2816	4710-01-189-9809	78	72
97403	13214E2817-1	5365-01-246-3914	152	33
97403	13214E2817-2	5365-01-245-4119	152	33
97403	13214E2817-3	5365-01-245-4120	152	33
97403	13214E2820	4710-01-179-7627	78	82
97403	13214E2822	4710-01-189-9811	78	96
97403	13214E2823	4710-01-189-9813	78	95
97403	13214E2824	4730-01-179-7576	78	87
97403	13214E2825	5307-01-184-5876	1	3
97403	13214E2830	6680-01-182-1078	36	7
97403	13214E2832	5340-01-195-5913	77	34
97403	13214E2833	5340-01-197-0926	77	35
97403	13214E2836	3020-01-182-9036	115	4
97403	13214E2837	5365-01-183-2639	115	5
97403	13214E2838	4730-01-183-8385	114	7
97403	13214E2839	4730-01-194-1971	114	5
97403	13214E2842	4710-01-179-7632	78	49
97403	13214E2843	5330-01-184-4904	57	60

CROSS-REFERENCE INDEXES

PART NUMBER INDEX

CAGEC	PART NUMBER	STOCK NUMBER	FIG.	ITEM
97403	13214E2847	5340-01-183-2737	116	21
97403	13214E2852	5340-01-184-4890	108	15
97403	13214E2903	3040-01-201-0965	182	56
97403	13214E2905	3020-01-207-3769	186	1
97403	13214E2906	3020-01-207-1152	182	57
97403	13214E2907	5306-01-189-6462	182	37
97403	13214E2908	3010-01-189-6460	182	23
97403	13214E2909	5340-01-189-6487	182	32
97403	13214E2910	2590-01-158-4062	182	1
97403	13214E2912	3040-01-201-0967	182	60
97403	13214E2916	2530-01-189-6400	182	34
97403	13214E2917	3040-01-189-6501	182	41
97403	13214E2918	5340-01-193-6687	182	4
97403	13214E2919	5365-01-181-6330	180	14
97403	13214E2920	2520-01-201-7876	181	1
97403	13214E2922	5315-01-194-0813	181	14
97403	13214E2923	3040-01-212-2498	181	12
97403	13214E2924	3040-01-201-1146	181	2
97403	13214E2925	5315-01-197-6465	181	15
97403	13214E2926	5340-01-194-5125	181	13
97403	13214E2927	3040-01-186-7895	181	10
97403	13214E2928	2520-01-186-7894	181	16
97403	13214E2929	5905-01-184-4833	181	9
97403	13214E2931	3040-01-201-1147	181	4
97403	13214E2932	5360-01-309-5091	181	5
97403	13214E2933	5905-01-192-2483	26	6
97403	13214E2934	5905-01-192-0288	26	4
97403	13214E2935	4730-01-223-0527	54	1
97403	13214E2944	2590-01-189-6404	43	1
97403	13214E2945	5330-01-193-0186	43	15
97403	13215E2332	3950-01-189-6478	182	6
97403	13215E2334	5330-01-165-1372	182	13
97403	13215E2335	3040-01-179-1412	182	10
97403	13215E2336	2590-01-179-1056	182	65
97403	13215E2337	2590-01-179-1055	182	44
97403	13215E2339		182	51
97403	13215E2341	3020-01-179-1253	182	15
97403	13215E2343	3020-01-179-1252	182	21
97403	13215E2346	2590-01-179-1047	182	59
97403	13215E2355	3040-01-201-0966	182	52
97403	13215E2357	3040-01-207-9627	184	1
97403	13215E2358	3040-01-179-1411	182	48
97403	13215E2359	4010-01-189-6455	182	29
97403	13215E6540	2530-01-167-8051	142	23
97403	13215E6542	4820-01-185-5763	143	15
97403	13215E6543	4820-01-185-5764	143	20
97403	13215E6544	5330-01-185-5840	143	4
97403	13215E6545	5340-01-185-5925	143	3
97403	13215E6547	5905-01-181-6396	146	6
97403	13215E6548	4820-01-185-5765	143	12
97403	13215E6549	2530-01-187-0361	147	5

CROSS-REFERENCE INDEXES

PART NUMBER INDEX

CAGEC	PART NUMBER	STOCK NUMBER	FIG.	ITEM
97403	13215E6550	3040-01-185-5908	143	37
97403	13215E6551	5360-01-185-5835	143	36
97403	13215E6557	3120-01-185-5862	143	35
97403	13215E6560	3040-01-185-5909	143	41
97403	13215E6563		143	11
97403	13215E6565	5330-01-185-5841	143	28
97403	13215E6566	5330-01-185-5842	143	26
97403	13215E6567		143	27
97403	13215E6568		143	33
97403	13215E6569		143	30
97403	13215E6580	4820-01-185-5768	143	32
97403	13215E6588-5	5365-01-181-6436	148	64
97403	13215E6588-6	5365-01-181-6437	146	14
			147	1
97403	13215E6590	5340-01-185-5914	143	19
97403	13215E6591-1	5306-01-198-4146	148	24
97403	13215E6591-2	5305-01-201-3790	144	4
			146	26
97403	13215E6591-3	5305-01-194-2999	145	19
97403	13215E6591-6	5305-01-194-3000	146	27
97403	13215E6591-7	5306-01-194-2981	146	17
97403	13215E6597	3040-01-181-6486	148	42
97403	13215E6598-4	5365-01-197-6366	142	11
97403	13215E6599	2520-01-187-0360	148	48
97403	13215E6600	2530-01-167-8052	140	18
97403	13215E6601	5340-01-181-6495	144	10
97403	13215E6602	5340-01-181-6496	144	22
97403	13215E6605	5340-01-186-3402	148	74
97403	13215E6606	3040-01-181-6530	148	72
97403	13215E6613	5365-01-181-6413	148	60
97403	13215E6614	5340-01-181-6497	147	15
97403	13215E6615	5310-01-195-5083	147	22
97403	13215E6617	3020-01-181-6468	KIT	
97403	13215E6618	5330-01-180-9913	147	14
97403	13215E6619-1	5365-01-196-6702	147	29
97403	13215E6619-2	5365-01-197-1558	147	29
97403	13215E6619-3	5365-01-198-5543	147	29
97403	13215E6620		147	27
97403	13215E6621-1	5365-01-180-9928	147	25
97403	13215E6621-2	5365-01-180-9929	147	25
97403	13215E6622	3130-01-186-3408	147	24
97403	13215E6623		147	21
97403	13215E6624-1	5365-01-196-8095	146	12
			147	7
97403	13215E6624-2	5365-01-197-1559	146	12
			147	7
97403	13215E6624-3	5365-01-197-1560	146	12
			147	7
97403	13215E6624-4	5365-01-197-1561	146	12
			147	7
97403	13215E6625-1	5365-01-197-1562	145	8

CROSS-REFERENCE INDEXES

PART NUMBER INDEX

CAGEC	PART NUMBER	STOCK NUMBER	FIG.	ITEM
97403	13215E6625-2	5365-01-197-1563	145	8
97403	13215E6625-3	5365-01-197-1564	145	8
97403	13215E6625-4	5365-01-197-1565	145	8
97403	13215E6626	5330-01-192-9326	148	73
97404	13215E6628		147	11
97403	13215E6629	5365-01-181-6438	147	10
97403	13215E6630	3020-01-181-6334	148	13
97403	13215E6631	3040-01-186-3395	147	13
97403	13215E6639	3040-01-181-6337	147	4
97403	13215E6644	3120-01-310-2402	148	17
97403	13215E6649	5330-01-166-1713	141	10
97403	13215E6650	3040-01-181-6488	148	55
97403	13215E6651	3120-01-181-6439	148	25
97403	13215E6655	5310-01-181-6443	147	12
97403	13215E6657	3040-01-181-6338	148	30
97403	13215E6658	3040-01-181-6336	148	26
97403	13215E6659	5365-01-210-7628	148	28
97403	13215E6661	5365-01-196-4020	148	29
97403	13215E6662	5315-01-199-2089	148	27
97403	13215E6663	2530-01-181-6340	145	26
97403	13215E6664	2530-01-181-6341	145	22
97403	13215E6665-1	5330-01-193-0206	148	63
97403	13215E6665-2	5330-01-192-9337	146	15
			147	2
97403	13215E6666		147	9
97403	13215E6667	3020-01-185-5913	148	21
97403	13215E6668	2530-01-181-6342	145	15
97403	13215E6669	2590-01-187-0362	145	9
97403	13215E6675-1	4730-01-194-2163	146	2
97403	13215E6675-2	4730-01-194-2164	146	3
97403	13215E6675-3	4730-01-194-2165	146	28
97403	13215E6676	3040-01-181-6531	146	1
97403	13215E6680	5340-01-181-6498	146	8
97403	13215E6682	5340-01-181-6503	145	21
97403	13215E6683	5360-01-194-3175	145	20
97403	13215E6684	5365-01-195-6221	145	6
97403	13215E6686	5330-01-192-9327	142	22
97403	13215E6687	3040-01-184-4817	146	21
97403	13215E6689	5330-01-193-0204	146	7
97403	13215E6690	4820-01-185-5769	143	6
97403	13215E6691	5360-01-185-5833	143	5
97403	13215E6692	4820-01-185-5770	143	7
97403	13215E6693	2815-01-185-0535	143	21
97403	13215E6694	5360-01-185-5834	143	22
97403	13215E6695	4820-01-185-5847	143	23
97403	13215E6696	4820-01-187-0556	142	17
			143	24
97403	13215E6697	2530-01-167-8053	146	16
97403	13215E6698	5340-01-181-6500	146	18
97403	13215E6700	3020-01-181-6430	146	19
97403	13215E6702	4710-01-181-6518	142	16

CROSS-REFERENCE INDEXES

PART NUMBER INDEX

CAGEC	PART NUMBER	STOCK NUMBER	FIG.	ITEM
97403	13215E6704	5360-01-194-9423	142	14
97403	13215E6706	4820-01-181-6471	142	12
97403	13215E6707	5330-01-193-0205	142	10
97403	13215E6708	5340-01-181-6459	142	9
97403	13215E6711	5360-01-194-3176	142	20
97403	13215E6713	5330-01-193-0185	146	22
97403	13215E6714	4710-01-181-6470	146	23
97403	13215E6715	5330-01-192-9328	146	24
97403	13215E6716	4730-01-181-6454	146	25
97403	13215E6720	3040-01-181-6485	148	10
97403	13215E6721	3040-01-181-6487	148	8
97403	13215E6725		143	44
97403	13215E6726	9390-01-181-6525	145	2
97403	13215E6729	5330-01-181-6441	145	7
97403	13218E0122-11	4730-00-595-1884	143	10
05842	1325.028	5305-01-191-3022	86	38
09704	133166	2540-01-171-0136	161	9
15434	136403	9905-00-473-7260	102	4
61393	1419-30A	5340-01-183-6863	104	14
61393	1427-40A	4730-01-183-2728	104	12
61393	1431-50A	5340-01-153-9424	104	6
60380	15SF24	3120-00-684-5725	60	12
			60	18
			61	9
			177	11
81321	15002	4820-00-424-7431	83	4
64294	151-36907	5305-01-179-1258	183	26
33457	153518	5330-01-044-2096	106	10
33457	153520S	5310-01-044-2112	106	11
15434	154087	5330-00-951-3538	94	10
15434	158139		106	6
60380	16AH1876	5315-01-191-3384	132	3
			133	3
23382	16B1582726	6210-00-699-9457	25	12
12603	16F08	4730-00-499-9837	130	11
98441	16WGTX-S	5340-01-182-8773	150	2
15434	163759	4730-01-089-5902	96	8
92867	16382300	2990-01-176-6122	8	27
62983	166360	5330-00-869-4202	85	10
64294	16751-14	2520-01-192-5607	74	19
64294	16877-1	2520-01-192-5717	74	13
64294	17086-35	5315-01-185-8519	183	15
33457	173176		106	12
15434	173368		106	5
62983	173792	5330-00-441-3105	85	3
15434	181466	5310-00-484-1718	94	2
15434	181592	2940-01-165-8253	106	7
15434	183342S	4330-01-145-5269	106	9
15434	183649	4730-01-142-0192	95	1
57517	1888-01		81	14
57517	1888-02		81	5

CROSS-REFERENCE INDEXES

PART NUMBER INDEX

CAGEC	PART NUMBER	STOCK NUMBER	FIG.	ITEM
57517	1888-03	5340-01-278-7961	81	2
57517	1888-04	2590-01-278-7962	81	11
57517	1888-05	6685-01-268-6735	81	18
57517	1888-07		81	17
57517	1888-08	5310-01-278-7963	81	8
57517	1888-09	5310-01-278-7964	81	9
15434	189566	5330-01-186-7541	98	7
05842	1904.503		86	44
05842	1906.503		86	23
05842	1908.503		86	40
02892	1919A4B1L	4320-01-132-0610	117	1
24617	192075	4730-00-196-1504	2	31
64294	19212-8	5315-01-179-1202	183	23
02697	2-015N552-90		169	1
02697	2-024N552-90		170	23
02697	2-111N552-90		170	13
02697	2-113N552-90		170	6
02697	2-266N552-90		169	9
			172	8
47876	2-401-40	6680-01-182-1251	20	19
71176	2C56P	3020-01-183-2712	109	21
02892	2X19X25		117	14
53203	20000	2910-00-646-9727	105	1
13130	2013 1/16	5133-00-837-7595	194	1
13130	2013 1/4	5133-00-988-5703	194	13
13130	2013 1/8	5133-00-988-5695	194	5
13130	2013 11/64	5133-00-988-5698	194	8
13130	2013 13/32	5133-01-021-9307	194	23
13130	2013 13/64	5133-01-051-4114	194	10
13130	2013 15/32	5133-01-023-1554	194	27
13130	2013 15/64	5133-00-988-5702	194	12
13130	2013 17/64	5133-01-119-7884	194	14
13130	2013 19/64	5133-01-056-2873	194	16
13130	2013 25/64	5133-01-018-9812	194	22
13130	2013 27/64	5133-01-018-9813	194	24
13130	2013 29/64	5133-01-121-5002	194	26
13130	2013 3/16	5133-00-988-5699	194	9
13130	2013 3/32	5133-01-045-4946	194	3
13130	2013 3/8	5133-00-988-5711	194	21
13130	2013 5/16	5133-00-988-5707	194	17
13130	2013 5/32	5133-00-988-5697	194	7
13130	2013 5/64	5133-01-053-7932	194	2
13130	2013 7/16	5133-01-018-9814	194	25
13130	2013 7/32	5133-00-988-5701	194	11
13130	2013 7/64	5133-00-988-5694	194	4
13130	2013 9/32	5133-00-988-5705	194	15
13130	2013 9/64	5133-00-988-5696	194	6
64294	20198-3	2520-01-192-5680	74	3
06090	2020921-4	1005-01-118-8602	56	10
64294	20202-1		74	15
15434	202045		100	1

CROSS-REFERENCE INDEXES

PART NUMBER INDEX

CAGEC	PART NUMBER	STOCK NUMBER	FIG.	ITEM
64294	20205	3020-00-221-8777	74	17
99688	20223	6105-01-192-6320	55	8
12603	203253	5307-00-401-0883	125	14
06853	205105	4820-00-595-2761	2	54
55719	208FA	5120-01-195-0640	188	15
01276	2081-8-2S	4730-00-729-4930	189	4
05842	2087.900	4320-01-189-1771	86	18
12603	209313	5305-00-775-9492	135	8
12603	210612	5306-01-197-4445	128	1
00736	21002	5310-01-223-9568	118	5
73680	21093-4509	5330-01-215-0114	182	50
76122	21230	5310-00-367-1799	73	4
76122	21260	5307-01-073-5002	73	10
76122	21261	5307-00-206-4044	73	8
76122	21266	5310-01-089-0538	73	5
15434	214203	2815-01-109-1318	101	7
12603	214295	5315-00-045-4037	127	61
12603	214924	2520-00-400-6454	135	12
12603	214933	3040-00-421-1325	134	19
15434	214939	2815-01-188-3265	101	6
12603	214953	5340-00-439-8139	134	17
64294	21496	3110-01-179-1159	183	7
12603	214988	3110-00-227-3240	135	5
15434	216354	4730-01-186-5991	95	5
40152	217099	5365-00-930-5141	131	10
			132	10
			133	10
40152	217148	3020-01-191-4404	132	7
			133	7
40152	217151	5310-01-194-8903	132	15
			133	15
03504	217152	2520-00-949-8112	131	18
12603	217155	3120-00-455-7053	131	20
12603	217156	2520-00-455-5634	127	31
12603	217158	2520-00-949-3695	131	7
12603	217161	2520-00-914-7301	131	9
			132	9
			133	9
12603	217164	2520-00-949-3627	131	11
			132	11
			133	11
12603	217165	5310-00-255-0014	131	15
12603	217334	5360-00-914-8353	131	4
40152	217347	5360-01-194-3159	132	2
			133	2
03504	217361	4310-00-949-7688	131	12
			132	12
			133	12
12603	217411	4310-00-799-9844	131	13
			132	13
			133	13

CROSS-REFERENCE INDEXES

PART NUMBER INDEX

CAGEC	PART NUMBER	STOCK NUMBER	FIG.	ITEM
40152	217509	5365-00-932-1248	131	6
			132	6
			133	6
40152	217548	3040-01-189-4624	127	23
40152	217560	3110-01-197-5082	127	27
12603	217599	5315-00-923-0268	131	5
40152	217605	5365-01-198-8757	131	25
12603	217648	5360-00-964-4656	130	42
12603	217649	5360-00-964-4546	130	43
12603	217650	4820-00-922-1953	130	38
40152	217652	5365-00-891-0214	130	39
12603	217653	5330-00-949-6241	129	1
12603	218376	5330-00-950-7731	128	13
40152	219297	4140-01-190-1023	135	10
40152	219883	3020-01-191-2738	125	10
12603	220714	5305-01-018-5592	127	21
06853	220636	2530-00-270-3878	6	7
12603	220983	2520-00-979-8765	120	25
			130	29
76122	22111	4320-01-191-4310	73	9
76122	22112	4320-01-191-4261	73	16
76122	22113	4320-01-192-3698	73	13
76122	22115	5330-01-205-9225	73	15
76122	22117	5310-01-207-7569	73	12
76122	22121	4730-01-190-2534	73	6
76122	22122	5330-01-205-9226	73	7
76122	22126	5315-01-193-7064	73	19
76122	22164	5365-01-193-2940	73	14
76122	22188	5905-01-189-5381	73	18
81321	22202	5340-01-133-4723	83	15
89346	222041		130	34
12603	222067	2520-00-051-5327	126	17
12603	222079	5330-00-963-0275	134	20
52676	222110	3110-00-702-3088	127	33
12603	222598	5310-00-027-2342	120	19
12603	222960	5310-01-018-0683	128	16
38443	223358		132	17
		3110-01-195-5142	133	17
12603	223740	4310-00-765-6039	131	24
40152	223855	5365-01-193-7137	132	23
			133	23
40152	223870	5365-01-193-7138	127	48
40152	223882	5365-01-193-7139	127	15
12603	223901	5340-00-435-6124	132	16
			133	16
40152	223973	5365-01-204-2592	125	11
03504	223997	5365-00-930-5143	131	23
12603	224026	5365-00-144-6445	134	8
			134	16
12603	224083	5365-00-838-8715	127	6
			134	4

CROSS-REFERENCE INDEXES

PART NUMBER INDEX

CAGEC	PART NUMBER	STOCK NUMBER	FIG.	ITEM
01276	2242-8-8S	4730-01-183-7167	189	3
12603	224513	2520-00-015-7139	120	20
40152	224514	5310-01-186-5425	120	21
40152	225603	3110-00-132-6967	127	11
			134	6
43334	225795		132	22
			133	22
03504	225840	3110-00-905-2789	127	45
40152	227395	5315-01-187-8816	120	10
40152	227396	2520-01-206-3879	120	9
40152	227397	5365-01-186-9610	120	17
40152	227402	5360-01-189-7782	120	29
40152	227403	5330-01-186-7168	120	5
40152	227404	5340-01-198-8261	120	4
62983	227407	5305-01-102-9565	85	8
40152	227418	4730-00-891-0205	130	1
40152	227422	4730-00-891-0206	130	16
40152	227423	5365-00-891-0207	130	8
40152	227550	2520-00-891-0201	130	10
40152	227555	2520-00-891-0202	130	19
40152	227556	5340-00-891-0203	130	20
12603	227557	4730-00-891-0204	130	23
40152	227558	5340-00-930-5718	130	22
40152	227561	2520-00-891-0194	130	25
40152	227562	2520-00-891-0195	130	24
40152	227564	5340-00-930-5717	130	49
06853	227885	5430-01-278-5727	3	1
12603	228094	2520-00-470-6272	130	5
40152	228095	2520-00-891-0191	130	4
40152	228096	2520-00-891-0192	130	3
12603	228502	2520-01-230-6802	120	30
06853	228600	5930-00-812-6888	20	21
06853	229293	2530-01-163-3321	2	24
12603	229566	5365-01-018-5218	135	15
03504	230102	2520-00-460-6430	130	50
03504	230103	5340-00-401-2070	130	48
03504	230104	2520-00-460-6433	130	46
03504	230105	2520-00-460-6440	130	45
12603	230106	5365-00-401-2065	130	26
12603	230520	5315-00-451-0089	130	31
89881	230751		131	17
12603	230886	3110-00-923-1246	127	42
03504	231134	5360-00-250-5622	130	44
81263	2321		55	9
40152	232393	3040-01-190-0449	127	29
12603	232394	2520-00-939-6605	131	3
			132	4
			133	4
12603	232535	5330-00-145-1509	135	4
40152	232778	2520-01-190-4298	131	2
			132	5

CROSS-REFERENCE INDEXES

PART NUMBER INDEX

CAGEC	PART NUMBER	STOCK NUMBER	FIG.	ITEM
40152	232778	2520-01-190-4298	133	5
40152	233662	5365-01-193-2947	127	24
82877	23396-02	4140-00-792-8395	55	5
06853	233997	5310-00-763-0038	6	3
12603	235961	5330-01-069-3126	125	8
12603	236982		131	22
40152	237154	5330-01-191-0514	128	8
40152	237233	5306-01-199-1228	135	22
40152	237234	5330-01-191-3185	135	21
40152	237242	2520-01-190-9727	134	23
40152	237243	2520-01-190-2537	134	24
40152	237328		128	2
40152	237405	2520-01-189-2146	134	21
40152	238705	5365-01-197-1631	135	16
40152	239047	2520-01-183-2638	129	7
12603	239049	3040-01-195-0500	134	14
40152	239050	5330-01-191-0494	134	15
89881	239051		126	19
40152	239052	4710-01-189-0708	126	2
40152	239053	4710-01-189-0709	126	3
40152	239054	4710-01-189-0710	126	7
40152	239055	4710-01-189-0711	126	8
40152	239056	4710-01-189-0712	126	9
40152	239057	4710-01-189-1697	126	10
40152	239058	4710-01-189-1698	126	14
40152	239059	4710-01-189-1699	126	15
40152	239060	4710-01-189-0713	126	11
40152	239061	4710-01-189-0714	126	12
40152	239062	4710-01-189-4565	126	13
40152	239063	4710-01-189-2100	126	20
77237	239064	4710-01-189-1700	126	18
40153	239065		128	3
77237	239066	5330-01-191-2531	128	4
40152	239067	4730-01-189-6694	128	5
40152	239069	5340-01-195-5959	128	11
77237	239070	3020-01-191-2736	127	9
40152	239071	3020-01-189-1014	127	12
40152	239073	3040-01-187-0990	132	18
40152	239074	3020-01-192-8391	127	28
40152	239075	3020-01-191-2737	127	47
40152	239076	3020-01-189-6702	131	27
40152	239077	3020-01-212-2503	131	26
40152	239078	3040-01-191-4160	127	44
40152	239080	3040-01-189-6603	127	32
40152	239081	3020-01-189-1803	127	39
40152	239084	3040-01-189-8961	133	18
77237	239085	3040-01-189-8647	134	9
40152	239086	3010-01-189-6725	134	11
40152	239088	3110-01-193-7908	134	3
40152	239089	3020-01-189-8868	134	7
89881	239090		130	18

CROSS-REFERENCE INDEXES

PART NUMBER INDEX

CAGEC	PART NUMBER	STOCK NUMBER	FIG.	ITEM
40152	239091	5340-01-197-1580	130	37
40152	239092	5360-01-195-5586	130	41
40152	239094	3040-01-189-2171	125	5
40152	239095	5330-01-191-0495	125	4
40152	239096	3020-01-208-3397	125	3
40152	239097		125	1
40152	239098	4140-01-209-6010	135	3
40152	239103	5365-01-198-8232	127	20
40152	239104	3110-01-193-0427	127	17
40152	239107	3130-01-198-5552	127	60
40152	239112	3020-01-191-6677	127	50
40152	239115	5330-01-191-0530	127	52
40152	239116	5365-01-198-8214	127	55
40152	239121	5365-01-198-8215	127	56
40152	239122	5365-01-198-8216	127	57
40152	239138	3020-01-192-9770	127	40
40152	239143	3040-01-191-5141	127	13
40152	239144	3040-01-190-0450	127	10
40152	239147	3020-01-191-9441	127	36
40152	239148	3040-01-189-6604	127	14
40152	239149	3020-01-190-1102	127	34
40152	239150	3020-01-192-3686	127	41
40152	239399	2520-01-189-6618	126	1
40152	239455	5306-01-194-0569	127	1
40152	239527	4820-01-189-1798	130	32
40152	239643	3040-01-212-2465	135	20
40152	239644	2520-01-189-1775	135	14
12603	24K6	5365-00-674-6831	120	28
88204	24MB	6240-00-001-9405	25	7
06853	240069	2540-01-068-3071	1	24
			5	1
40152	240293	2520-01-189-6591	132	24
			133	24
40152	240294	3120-01-195-5155	132	20
			133	20
06853	240351	5306-00-519-6666	6	4
40152	240407	2520-01-189-6617	127	2
76122	24057	4320-01-167-8121	73	3
40152	240869	2520-01-189-8954	128	15
89881	241436		131	21
40152	241624	2590-01-166-6299	120	1
40152	241650	3040-01-189-8960	135	18
40152	241651	2530-01-192-2430	120	8
40152	241653	2920-01-204-7695	120	18
89881	241656		120	23
40152	241658	2925-01-186-9497	120	15
40152	241672		132	21
89881	241673		133	21
40152	241695		135	1
40152	241781	5365-01-194-0756	127	37
89881	241830		120	11

CROSS-REFERENCE INDEXES

PART NUMBER INDEX

CAGEC	PART NUMBER	STOCK NUMBER	FIG.	ITEM
40152	241901		124	3
40152	243251		131	14
62983	244956	5330-00-867-1747	85	5
12603	246006		132	8
			133	8
12603	25E15	5310-01-192-8884	126	5
12603	25K30030	5330-01-053-9625	120	16
			130	9
12603	25K40024	5330-00-706-3188	130	33
12603	25K40026	5330-00-914-5828	129	2
25119	25004750		174	1
24617	25010222		123	19
15434	252916	2940-00-552-3842	106	3
15434	252917	2940-01-094-9353	106	4
15434	256546	4930-00-477-8276	53	3
80064	2585164-279	5305-01-045-8389	48	9
80064	2585164-296	5305-01-187-9547	48	38
80064	2588273	4210-00-146-2963	48	20
80064	2588282	5905-01-107-3429	49	7
77873	26436J	5310-01-194-9232	149	7
77873	2715J	5330-00-355-2099	149	8
64294	27451	5330-00-702-3413	183	4
64294	27486A	5330-01-205-5886	74	5
60038	27690/27620	3110-00-289-6748	152	6
77873	27853J		149	4
64294	27887	3110-01-179-1164	183	10
03914	28-038	5120-00-203-4809	191	3
33525	282107	6685-01-107-3334	49	2
06853	285172	4820-00-420-5499	50	22
40152	288835	2520-01-181-6423	124	5
64294	29530-11	5306-01-080-5712	74	22
64294	29530-9	5305-01-080-6620	74	11
64294	29531-100	5305-01-179-1302	183	29
64294	29531-16	5305-01-205-5361	74	2
64294	29531-57	5305-01-269-7504	183	1
64294	29549-4	5305-00-155-5075	74	23
			183	12
64294	29601-11	5310-00-495-7376	74	12
64294	29601-12	5310-01-080-6631	74	21
64294	29602-130		183	30
64294	29602-132	5365-00-215-5605	74	7
64294	29620-3	5315-00-616-5524	74	10
64294	29650-3	5365-00-215-5541	74	6
64294	29656-10	5365-01-179-1264	183	6
64294	29657-87	5365-01-179-1265	183	24
64294	29771-034		183	5
64294	29771-138	5330-00-928-8914	74	4
89881	3&4/H/L/CLUTCH		132	1
83324	3/4-16GH3		193	1
43334	3L04XR1KJ	3110-00-554-2733	186	7
02892	3X1916X1		117	4

CROSS-REFERENCE INDEXES

PART NUMBER INDEX

CAGEC	PART NUMBER	STOCK NUMBER	FIG.	ITEM
40152	300058	5315-00-930-6204	130	12
15434	3005150	2590-01-109-2075	101	5
26337	300716	9905-01-187-8429	173	7
15434	3008470	5340-01-143-6045	97	18
05228	30102		83	11
15434	3010595	5305-01-085-8197	96	2
15434	3012473	5305-01-137-6706	101	2
15434	3012950	3040-01-091-0485	101	9
67049	301318	2930-01-192-8238	113	6
67049	301327	5330-01-205-8996	113	10
67049	301328	2930-01-191-8466	113	15
67049	301334	2930-01-191-9388	113	14
67049	301335	2930-01-231-0634	113	17
67049	301338	2930-01-192-4681	113	11
67049	301345	5340-01-205-9260	113	12
67049	301347	2930-01-192-8237	113	18
15434	3013497	5330-01-088-6751	KIT	
15434	3014766	5305-01-129-4217	101	3
67049	302391	4710-01-192-3460	113	1
26337	302511		173	14
15434	3026315	5330-01-143-8209	101	10
15434	3027295	9905-01-137-4775	102	2
15434	3028673	5330-01-143-8208	101	8
15434	3035344	4810-01-187-4925	94	11
15434	3038055	4710-01-228-5835	95	4
15434	3038058	5330-01-220-2384	95	3
15434	3041945	4710-01-184-4035	96	4
15434	3041946	2815-01-184-6604	96	1
15434	3041949	6680-01-183-4399	96	3
15434	3043100	2930-01-229-3431	99	1
15434	3045140	4710-01-228-5834	95	2
31007	304709C1	5999-00-996-3743	128	12
15434	3047101	2925-01-228-5800	93	12
15434	3047102	2510-01-262-4982	99	17
15434	3047103	4710-01-262-4996	98	6
15434	3047104	4710-01-262-4995	98	3
15434	3047105	4710-01-262-4999	98	11
15434	3047106	4710-01-262-5000	98	10
26337	305112		173	15
64294	30615-3	2520-01-192-8348	74	16
64294	30619	5365-01-204-8909	74	18
64294	30621	3110-00-183-6730	74	14
			74	20
64294	30623	3110-01-205-8960	74	8
67049	306660	5340-01-270-1802	113	16
67049	306661	2930-01-216-5646	112	9
38443	312S-T14	3110-01-192-3388	135	17
80201	31250	5330-01-181-6419	147	18
62983	317162	5330-00-505-2419	85	9
77873	32719J	2520-01-192-5675	149	10
03497	3300A54A0053-001	3110-00-097-6353	110	9

CROSS-REFERENCE INDEXES

PART NUMBER INDEX

CAGEC	PART NUMBER	STOCK NUMBER	FIG.	ITEM
33457	3301179		106	13
15434	3301949S	5306-01-155-8461	106	15
15434	3301956S	5315-01-159-1255	106	8
57733	330670	2530-01-203-9869	177	16
77873	3310J	4730-00-355-2100	149	9
64294	33263	3110-01-179-1162	183	18
15434	3375981	4910-00-150-5805	188	20
64294	33780-11	2590-01-226-0722	183	8
64294	33794	2590-01-179-1052	183	2
64294	33795-1		183	3
64294	33796	5360-01-179-1217	183	33
64294	33797-1	4810-01-267-8702	183	31
64294	33798	2590-01-179-1051	183	17
64294	33799-1	2590-01-179-1053	183	19
64294	33801	5340-01-179-1358	183	32
64294	34903	3110-01-179-1165	183	21
71198	35 S/C C/L	3020-01-070-9061	125	2
16007	353512-1	1670-01-048-7009	57	18
			58	19
12603	36F1	4730-01-189-8578	130	28
62983	360430	4935-01-029-3391	85	2
64294	36906	5310-01-179-1284	183	25
15434	3801539	5330-01-169-3180	KIT	
64294	38248-12	2590-01-226-0545	183	9
64294	38249-3		183	11
64294	38933-11	2590-01-179-1054	183	20
64294	38947-6		183	22
81343	4-4-4 140424C	4730-00-177-6166	36	2
77873	4-73527	2520-01-183-6864	149	1
12603	4E06	5310-00-180-0277	125	6
			128	6
			129	3
12603	40K-04	4730-00-089-2515	130	13
12603	40K02	4730-00-105-2684	130	14
26337	400323		173	5
26337	400324	3040-01-192-9797	173	13
26337	400325		173	16
26337	400328	5365-01-223-6853	173	12
58163	40099-1	3040-01-198-8728	110	19
58163	40102-1	2930-01-198-2832	110	3
58163	40103-1	3040-01-199-7821	110	5
58163	40112-1	3040-01-198-8727	110	18
58163	40128-1	9905-01-187-6447	110	21
58163	40314-1	3130-01-201-8763	110	11
58163	40327-1	5365-01-202-7727	110	7
58163	40430-1	4140-01-182-8905	109	36
62983	404751	9905-01-192-5549	85	7
01212	410389R	5330-01-228-1416	127	51
01212	411100R	5330-01-187-6124	120	13
00671	4112-4-388	4730-01-182-8968	104	20
45320	41404	5355-00-401-5294	181	3

CROSS-REFERENCE INDEXES

PART NUMBER INDEX

CAGEC	PART NUMBER	STOCK NUMBER	FIG.	ITEM
64294	41691	5905-01-193-9772	74	24
64294	41693	5905-01-193-1237	183	13
21450	420494	5305-01-094-9275	45	13
21450	420497	5305-01-196-0217	45	46
60038	42687-42620	3110-00-135-7205	146	11
30076	43883	4820-00-289-3378	50	33
24617	444613	4730-00-788-5959	123	23
40152	450247	2520-01-203-9888	125	12
64294	45179-4	2815-01-297-5634	183	16
24617	454557	5340-00-608-9214	123	11
64294	46095-6	2590-01-179-1050	KIT	
12603	47K10	5365-01-193-2611	130	51
60038	48190-48120	3110-00-866-7252	147	23
86768	483-3/8B1-2	4820-01-037-9283	119	20
64294	48307-3		183	14
60038	48385/48320	3110-00-989-0739	152	32
60038	48393/48320	3110-00-227-4682	152	23
64294	49391-1		183	28
64294	49392		183	27
89881	5&6CLUTCH		133	1
81337	5-4-1695-4		BULK	10
12603	5C620	5305-00-103-3041	135	2
29092	5R327-1	5305-00-022-8292	45	5
00624	500024-20-16S	4730-01-182-9035	122	28
95019	500357-13	5310-00-671-4109	134	13
19207	5005864	5310-00-050-3520	70	8
99688	50970	5310-01-193-9502	55	23
99688	51021	5905-01-192-2802	55	21
99688	51410	5310-01-194-6453	55	12
24617	5187309	5330-00-629-6340	123	17
24617	5187310	5330-00-604-8094	123	16
72962	52NE2120120	5310-01-183-6841	153	6
			154	7
			155	6
			155	7
19207	5227606	4730-00-350-4437	48	12
00624	53336	4210-00-885-5724	48	31
06046	535D1/47686	6680-01-158-4091	28	10
19207	5381088	5930-00-130-5349	24	5
06046	540S2/47685	6680-01-158-4090	28	12
64575	5423520001	5905-01-206-3994	80	6
99688	54430		55	1
99688	54440		55	19
99688	54450		55	7
99688	54470	5340-01-244-5802	55	16
99688	54540	9320-01-192-5593	55	4
72512	55M	5355-01-181-6415	1	20
			62	4
			76	55
			137	30
			138	5

CROSS-REFERENCE INDEXES

PART NUMBER INDEX

CAGEC	PART NUMBER	STOCK NUMBER	FIG.	ITEM
72512	55M	5355-01-181-6415	161	22
72512	55M RED95	5355-01-179-9116	76	57
26337	552384	7690-01-190-5184	173	6
84256	55520	5340-01-193-7194	57	1
24617	5573102		123	13
24617	5573534		123	12
24617	5573538		123	21
24617	5573870		123	9
24617	5574892		123	5
24617	5574893		123	10
24617	5574894		123	6
24617	5574896	5360-00-982-2040	123	8
70040	5575086	5330-00-736-3508	123	7
70040	5575206	4730-00-082-0856	123	22
9E462	5575208	4330-01-313-7825	123	4
24617	5575210		123	14
24617	5575211		123	20
24617	5577938	5365-00-262-4701	123	18
98296	56B23619-7	4720-00-993-1792	BULK	14
84561	5621970000		80	10
90005	569020-01	4310-00-640-3774	114	2
			139	1
90005	569020-18	4310-00-640-3774	77	2
19207	57K1015	5330-01-308-0150	KIT	
19207	57K1143	4320-01-183-6826	KIT	
19207	57K1144	4320-01-183-6902	KIT	
19207	57K1145	4320-01-182-7641	KIT	
19207	57K1146		KIT	
19207	5702992	4320-00-874-6726	KIT	
19207	5705404	2530-01-183-2643	KIT	
19207	5705405	2530-01-183-6822	KIT	
19207	5705406	2510-01-179-4388	KIT	
19207	5705407	4330-01-189-9817	KIT	
19207	5705408	4330-01-186-7893	KIT	
19207	5705413	4330-01-182-9042	KIT	
19207	5705422	4330-01-182-9043	KIT	
19207	5705423	2520-01-188-7534	KIT	
19207	5705425		KIT	1
19207	5705426		KIT	2
19207	5705427		KIT	3
19207	5705558	2530-01-183-2645	KIT	
19207	5705559	2590-01-183-2644	KIT	
19207	5705560	2530-01-183-2646	KIT	
19207	5705562	2590-01-216-8646	188	10
19207	5705564	2815-01-225-8385	91	32
19207	5705565	5120-01-301-5783	188	16
19207	5705566	5120-01-302-4387	188	17
19207	5705833	3950-01-313-7822	187	1
06970	580-404-048	2990-01-163-8009	180	6
81337	6-1-5876	8315-00-106-5973	BULK	8
77873	6-8525	2520-01-192-5674	149	2

CROSS-REFERENCE INDEXES

PART NUMBER INDEX

CAGEC	PART NUMBER	STOCK NUMBER	FIG.	ITEM
77873	6D8524		149	5
12603	6H29	5340-01-020-2889	126	4
02892	6X1916X21	4320-01-133-7864	117	11
02892	6X1916X22	4320-01-193-3330	117	10
12603	6002628		127	49
26337	600284		173	8
99688	602-3180	2540-01-192-7974	54	26
52676	6020J/C3	3110-00-849-8942	144	5
05228	60260		83	7
81321	60263	2910-00-462-4877	83	10
09049	607GB526	5930-01-163-3197	31	6
09049	607GM531	5930-01-181-6114	36	1
09049	607GM532	5930-01-182-7486	31	7
99688	60760	5310-01-132-5309	55	13
99688	61180	5320-01-193-9279	55	20
99688	61310	5340-01-192-7041	55	14
52676	6206RS	3110-00-100-2368	85	16
52676	6215	3110-00-554-2972	148	40
52676	6217J/C3	3110-00-849-8941	144	8
15434	63842	5310-00-134-4169	101	4
60038	64433-64700	3110-00-102-0613	147	8
07878	65B3732	5340-00-678-6574	57	19
			58	25
99688	65048	2590-01-196-1147	55	30
99688	65057	6150-01-199-2521	55	24
12603	654724	5315-00-052-0146	130	17
84561	6560910000		80	9
84561	6560930000		80	11
84561	6561010000		80	12
12603	659041	5340-00-930-7601	130	21
12603	659764	5365-00-072-6729	131	8
12603	664116	5365-00-455-2750	131	16
05228	6653463		83	8
64829	6654655	5340-00-915-8173	83	3
12603	666542	5365-00-252-4746	135	6
84561	6760930000		80	5
84561	6760950000		80	7
15434	67684	5310-00-262-2986	94	12
15434	68152B	5340-01-185-8623	96	7
09049	690PM1095	5930-01-182-1223	31	4
79136	6900	5120-01-230-1509	188	34
15434	69066	5365-01-185-8521	97	16
16954	691-10014	5330-00-252-8888	167	8
12603	7E08		134	22
11083	7N9738	5935-01-149-5165	18	32
			34	15
19207	7000296	6210-00-578-7970	157	13
06853	7010-05	2530-01-176-1192	6	1
99688	70370	6150-01-234-1617	55	11
19207	7044253		70	6
19207	7056706	5940-00-705-6706	21	9

CROSS-REFERENCE INDEXES

PART NUMBER INDEX

CAGEC	PART NUMBER	STOCK NUMBER	FIG.	ITEM
19207	7056706	5940-00-705-6706	34	17
19207	7056707	5940-00-705-6707	21	10
19207	7056708	5940-00-705-6708	18	17
			34	10
19207	7056709	5940-00-705-6709	20	8
			40	13
19207	7056712	5940-00-800-7470	34	4
			160	10
19207	7056715	5940-00-705-6715	160	1
19207	7057187	5930-00-705-7187	47	38
19207	7057189	5360-00-705-7189	47	37
19207	7064504		7	17
19207	7064704	5315-00-695-6223	43	8
19207	7064896	6250-00-169-4162	47	8
19207	7064899	6150-00-055-1751	47	17
19207	7064900	5325-00-623-0928	47	23
19207	7064961	5935-00-622-4948	47	18
19207	7064962	6250-00-337-7465	47	6
19207	7067228	3110-00-554-2985	148	9
19207	7083639	5120-00-708-3639	188	22
12603	711161	5365-00-175-1315	127	8
58163	723071-2	3120-01-129-2151	110	12
58163	723071-4	5365-01-194-0757	110	8
74687	7301857	5320-01-183-1731	84	29
40152	731964	5330-00-930-5163	130	15
19207	7320641	5305-00-737-5694	47	2
19207	7320642	5340-00-732-0642	47	1
19207	7320651	5930-00-732-0651	47	30
19207	7320652	5310-00-732-0652	47	35
19207	7320654	5310-00-732-0654	47	33
19207	7320655	5330-00-732-0655	47	34
19207	7320656	5355-00-732-0656	47	39
19207	7320657	5305-00-732-0657	47	36
19207	7320687	5305-01-048-6596	47	10
19207	7350911	4730-00-278-3144	122	38
19207	7354530	5310-00-741-2834	45	8
19207	7358621	6210-00-337-7345	28	9
19207	7358622	6210-00-299-5564	25	15
19207	7358626	5330-00-297-6329	25	3
			25	10
			25	14
			28	8
19207	7358672	6210-00-548-0504	25	4
			25	11
19207	7376357	5365-00-737-6357	141	8
96906	7397787		77	53
		5340-00-739-7787	122	9
40152	743314	5310-00-930-5150	130	7
12603	743458	3110-00-554-5304	125	9
05228	7502407	4730-01-188-8134	82	11
05228	7502409		82	9

CROSS-REFERENCE INDEXES

PART NUMBER INDEX

CAGEC	PART NUMBER	STOCK NUMBER	FIG.	ITEM
05228	7502410		82	16
05228	7513130		82	15
05228	7513385	4330-01-234-1939	82	3
05228	7516310		83	12
19207	7524564	5325-00-338-1274	160	12
19207	7526007	5325-00-353-0948	45	47
19207	7529133-7	5340-01-197-7597	77	45
			77	54
			107	13
			121	13
			122	11
19207	7529133-9	5340-01-231-5357	108	12
			121	1
			122	5
19207	7539197	2590-00-040-2075	16	13
05228	7551681	5905-01-182-7762	82	5
05228	7551702		82	8
05228	7551849		82	7
05228	7551850		82	10
12603	755855	5340-00-027-1633	134	10
19207	7708123	5330-00-770-8123	141	4
19207	7708356	3020-01-181-6489	146	20
19207	7708979	5365-00-090-9164	143	14
19207	7709185	5365-00-282-7017	148	41
19207	7709353	2520-00-692-9242	148	57
19207	7709958	3110-00-822-3822	148	20
19207	7714880		70	5
19207	7714911	5310-00-771-4911	69	5
			70	2
19207	7716634	5975-00-771-6634	18	4
19207	7722322	5365-00-772-2322	43	4
19207	7722333	5365-00-090-5426	18	1
			20	2
19207	7722352	5935-00-201-6673	160	13
19207	7723308	5935-00-333-9414	160	11
19207	7723309	5310-00-393-6685	18	3
			20	1
19207	7723475	5935-00-771-8192	43	7
19207	7728640	5940-00-914-6054	22	7
19207	7728777	5940-00-983-4067	12	15
19207	7728778	5940-00-314-0479	18	20
			39	4
19207	7728779	5940-00-113-3145	34	26
19207	7728780	5940-01-035-4212	12	16
			22	8
19207	7729788	6220-00-772-9788	45	32
19207	7729800	5360-00-772-9800	45	9
19207	7731428	5935-00-773-1428	20	6
19207	7739925	5340-00-647-3933	43	12
19207	7748617	5306-01-195-5011	146	13
			147	3

CROSS-REFERENCE INDEXES

PART NUMBER INDEX

CAGEC	PART NUMBER	STOCK NUMBER	FIG.	ITEM
19207	7748628	5930-00-730-6623	30	18
81321	7886	5340-01-133-4724	83	14
81349	7954899	5930-00-548-8046	24	15
19207	7962241	6220-00-796-2241	47	3
19207	7962242	5330-00-796-2242	47	26
19207	7962244	6220-00-796-2244	47	27
19204	7962246	5340-00-087-9668	47	28
19207	7962247	6220-00-087-9667	47	29
19207	7962251	5330-00-173-4770	47	16
19207	7962254	5330-00-796-2254	47	14
19207	7962265	6220-00-557-8228	45	48
19207	7962266	6220-00-557-8229	45	12
19207	7968260	4210-00-796-8260	48	13
19207	7971111	6210-00-635-5686	25	8
19207	7972326	5330-00-047-4105	45	31
19207	7972327	5325-00-899-1505	45	20
19207	7972328	5305-00-854-2185	45	49
19207	7972330	6220-00-179-8976	45	29
19207	7972331	6695-00-179-4945	45	30
19207	7972333	5330-00-047-4096	43	5
19207	7972334	6220-00-934-8307	45	38
19207	7972337	6220-00-179-4946	45	15
19207	7972339	6220-00-202-8591	45	10
19207	7972340	5330-00-047-4101	45	51
19207	7972345	5330-00-047-4098	45	11
19207	7972346	5330-00-047-4099	45	16
19207	7972350	5330-00-047-4104	45	2
19207	7972351	5310-00-797-2040	45	28
19207	7972354	6220-00-937-4721	45	26
19207	7972357	6220-00-999-5285	45	41
19207	7972358	6220-00-179-4834	45	21
19207	7972359	6220-00-999-5286	45	35
19207	7982401	5935-00-399-6673	21	15
			43	17
			157	11
19207	7982907	5935-00-214-0904	18	7
02697	8-018N300-90	5330-00-627-5485	81	7
81343	8-8 070202CA(CAD)	4730-00-273-6686	2	17
			54	4
12603	8D06	5310-00-975-2075	125	13
26337	800107	2530-01-169-3705	173	4
24161	81780016	3030-01-242-6377	109	31
99688	82050	5340-01-194-5296	55	32
81833	8211-040001	4820-01-155-0138	90	1
74687	8250	4720-01-184-4853	103	3
33457	8265S	5310-01-044-2052	106	14
19207	8335233	5305-00-633-0785	47	4
19207	8335240	5330-01-078-3985	47	11
19207	8335242	6250-01-141-1543	47	12
19207	8338561	5935-00-833-8561	12	19

CROSS-REFERENCE INDEXES

PART NUMBER INDEX

CAGEC	PART NUMBER	STOCK NUMBER	FIG.	ITEM
19207	8338561	5935-00-833-8561	18	13
			21	5
			30	23
			34	23
			42	7
			157	8
			160	6
19207	8338562	5970-00-833-8562	12	18
			18	12
			21	6
			30	24
			34	22
			42	8
			43	19
			157	7
			160	7
19207	8338564	5940-00-399-6676	12	17
			18	11
			21	1
			24	22
			30	25
			34	21
			42	9
			43	18
			157	6
			160	8
19207	8338566	5935-00-572-9180	18	6
			21	22
			30	26
			41	11
			42	3
			46	3
			55	27
			120	32
			157	3
19207	8338567	5310-00-833-8567	18	9
			21	21
			30	27
			41	10
			42	2
			46	2
			55	28
			120	33
			157	4
19207	8338569	2590-00-695-9076	21	3
			24	20
19207	8338570	5310-00-298-8503	21	2
			24	21
19207	8338572	5935-00-695-9077	24	17
19207	8338573	5310-00-595-7044	24	18
19207	8347311	3120-00-840-9446	142	21

CROSS-REFERENCE INDEXES

PART NUMBER INDEX

CAGEC	PART NUMBER	STOCK NUMBER	FIG.	ITEM
19207	8347311	3120-00-840-9446	143	43
19207	8348050	2520-00-840-9434	142	19
19207	8348801	5365-00-844-2913	148	12
19207	8348817	2520-00-498-3815	148	69
19207	8349197	2520-00-730-6669	148	2
19207	8349689	5365-00-913-1208	142	18
			143	25
19207	8349783	2520-00-730-6665	148	35
19207	8349941	2520-00-735-9097	148	43
19207	8350176	5330-00-845-1521	141	6
19207	8350405	5330-01-192-3367	148	38
13475	8351184	2520-00-446-2484	148	1
19207	8351424	3120-00-839-2331	143	38
19207	8351432	5360-00-839-1626	143	47
19207	8351437	5330-00-732-1312	143	17
19207	8351458	5360-00-841-6980	143	16
19207	8351503	5360-00-845-1520	148	5
13475	8351531	2520-00-736-3578	148	44
19207	8351550	2520-00-861-1441	148	58
19207	8351567	2520-00-736-3581	144	16
19207	8351568	5365-00-073-5130	144	19
19207	8351572	5365-01-194-8524	144	6
19207	8351573	5310-00-844-5652	144	20
19207	8351574	3020-01-181-6473	148	19
19207	8351579	5310-00-841-0273	148	11
19207	8351580	5360-00-843-0141	148	47
19207	8351581	5365-00-842-7854	148	45
19207	8351582	5330-00-736-0281	144	15
19207	8351583	5365-00-842-7853	144	7
19207	8351584	2520-00-735-9079	148	37
19207	8351587	2530-00-734-5295	148	22
19207	8351588	2520-00-936-5335	148	46
19207	8351602	2520-00-735-4245	148	56
19207	8351603	2520-00-735-4244	148	33
19207	8351609	2520-00-837-1585	144	17
19207	8351618	2520-00-179-7036	144	13
19207	8351646	5306-00-847-4964	148	23
19207	8351666	5360-00-841-8409	148	59
19207	8351676	5330-00-735-4264	144	9
19207	8351681	5315-00-733-8093	148	3
19207	8351687	2520-00-735-4268	148	6
19207	8351801	5340-01-185-0511	143	18
19207	8351894	5330-00-861-1433	148	52
19207	8351895	5330-00-895-6456	145	14
19207	8351897	5330-00-861-1431	148	62
19207	8351899	5330-00-861-1429	148	53
19207	8351906	2805-00-861-1437	148	51
19207	8351907	2520-00-895-6454	145	13
19207	8351909	2805-00-861-1435	148	61
19207	8351911	2805-00-861-1440	148	54
19207	8351925	2520-00-861-1442	144	3

CROSS-REFERENCE INDEXES

PART NUMBER INDEX

CAGEC	PART NUMBER	STOCK NUMBER	FIG.	ITEM
19207	8351929	5330-00-848-9944	144	2
19207	8352005	3120-01-058-1160	142	15
19207	8352006	4820-01-053-5141	142	13
19207	8355937		148	14
19207	8355949	3040-01-181-6431	148	16
19207	8355952	5340-01-181-6339	148	36
19207	8357330	5365-01-181-6477	148	18
19207	8376500	6210-00-699-9458	28	6
19207	8386470	5320-00-115-1544	45	7
70040	850435	4820-01-201-7978	84	13
81833	8511-050002	4810-01-313-6320	89	1
99688	85632	5915-01-201-2030	55	15
26337	857220		119	12
99688	85803	5915-01-201-2029	55	10
19207	8675777	5306-00-839-9088	145	25
19207	8675930	6350-00-772-7664	30	33
40152	867753	5315-01-187-6329	120	14
19207	8690476	5340-00-543-3155	163	4
19207	8690485	5340-00-479-2947	163	6
19207	8690490	5340-01-134-3719	163	5
19207	8690527	2540-00-968-4060	7	18
30327	87C1-4		2	38
19207	8710626		70	4
19207	8710627		70	9
19207	8710628		70	12
19207	8710629		70	10
19207	8710630	2540-00-047-3926	70	1
19207	8724258	5935-00-686-2599	18	2
19207	8724494	5975-00-660-5962	34	27
19207	8724495	5935-00-691-5591	40	12
19207	8724497	5310-00-656-0067	40	11
19207	8724762	9390-00-146-9334	BULK	28
19207	8724762AR		12	9
			14	7
			21	39
			34	30
19207	8724763	9390-00-180-7289	BULK	29
19207	8724763AR		12	8
			18	5
			20	4
			21	37
			34	33
19207	8724764	9390-00-414-7139	BULK	30
19207	8724764AR		14	11
			21	40
			34	34
19207	8741492	5935-00-807-4109	156	6
19207	8741739	5120-00-605-3926	188	23
19207	8744290	6220-00-699-8104	45	33
19207	8744293	6220-00-699-8103	45	39
19207	8744294	6150-00-916-2124	45	52

CROSS-REFERENCE INDEXES

PART NUMBER INDEX

CAGEC	PART NUMBER	STOCK NUMBER	FIG.	ITEM
19207	8744399	6220-00-699-8105	45	4
19207	8744897	5310-00-132-1438	47	21
19207	8744898		47	15
33525	878009	4210-01-107-3418	49	4
34228	885F052005	5905-01-299-8858	157	12
81833	8904-000014	5365-01-191-8207	89	9
81833	8904-000024	4820-01-190-0070	89	16
81833	8904-000334	5306-01-191-8155	89	13
81833	8904-000344	5306-01-195-1553	89	10
81833	8904-000354	5310-01-193-4521	89	12
81833	8904-000364	5310-01-193-4522	89	3
81833	8910-000020	4820-01-191-4370	89	15
81833	8910-000030	4820-01-189-1774	89	8
81833	8910-000040	4820-01-189-1773	89	17
81833	8910-000050	4820-01-189-2145	89	7
81833	8910-000060	4810-01-190-0967	89	14
81833	8910-000070	4820-01-189-6274	89	4
81833	8910-000240	4810-01-314-6238	89	6
00624	900010-32C	9505-00-293-4208	BULK	43
00624	900010-32C-AR		82	6
00624	900010-32CAR		110	16
77873	9067J	4730-00-172-0010	149	6
12603	91F-07		130	2
12603	91F-10	5330-00-064-7796	130	52
2V507	92314A294		9	19
05228	9314824		83	13
05228	9326077	4820-01-187-6815	83	9
05228	9326079	2815-01-179-9055	83	1
05228	9326688	5365-00-202-8946	83	5
12603	940524	5305-01-209-7164	127	53
24617	9420174		123	15
62983	942158	5805-01-026-1442	85	4
99688	95090	5340-01-197-1633	55	17

CROSS-REFERENCE INDEXES

FIGURE AND ITEM NUMBER INDEX

FIG.	ITEM	STOCK NUMBER	CAGEC	PART NUMBER
BULK	1	6145-00-705-6684	81349	M13486/10-1
BULK	2	6145-00-567-3255	81349	M13486/2-2
BULK	3	4010-00-585-2108	16003	C43974
BULK	4	4010-00-720-4467	81346	RRC271
BULK	5		81349	M21840TYPE1A,CL1,1.00W,BLK3230
BULK	6		81349	M21840TYPE1A,CL1,1.50W,BLK3230
BULK	7	8315-01-086-9635	11153	065
BULK	8	8315-00-106-5973	81337	6-1-5876
BULK	9		81349	MILF21840TYPEII,CL1,2.00W,GRN
BULK	10		81337	5-4-1695-4
BULK	11	5340-01-224-6926	96906	MS35830-14DF
BULK	12	5340-01-195-1714	96906	MS35831-6A
BULK	13	4720-01-238-2316	81348	WW-H-1053
BULK	14	4720-00-993-1792	98296	56823619-7
BULK	15	4720-01-122-9847	81349	M62217/1-16BULK
BULK	16		81349	M62217/18 BULK L
BULK	17	4720-01-192-5869	81349	M62217/1-36
BULK	18	4720-01-088-1085	81349	M62217/1-44
BULK	19	4720-01-244-2447	19207	12334250-19
BULK	20	5970-00-063-1500	81349	M23053/1-101-0
BULK	21	5970-00-063-1499	81349	M23053/1-102-0
BULK	22	5970-00-063-1495	81349	M23053/1-103-0
BULK	23	5970-01-085-3431	81349	M23053/1-201-0
BULK	24		81349	M23053/4-102-0
BULK	25	5970-00-819-9569	81349	M23053/5-103-9
BULK	26	5970-00-812-2967	81349	M23053/5-108-0
BULK	27	5970-01-162-6918	81349	M23053/5-305-0
BULK	28	9390-00-146-9334	19207	8724762
BULK	29	9390-00-180-7289	19207	8724763
BULK	30	9390-00-414-7139	19207	8724764
BULK	31	9330-00-563-4527	77902	FLEXIGLAS GM
BULK	32	4020-01-058-3483	19207	11677925
BULK	33	5330-01-184-4881	97403	13204E2894
BULK	34	6145-00-699-8963	81349	M13486/1-1
BULK	35	6145-00-161-1609	81349	M13486/1-3
BULK	36	6145-00-152-6499	81349	M13486/1-5
BULK	37	6145-00-705-6678	81349	M13486/1-7
BULK	38	6145-00-538-8222	81349	M13486/1-9
BULK	39	6145-01-043-0757	81349	M22759/18-16-9
BULK	40	6145-01-013-1525	81349	M22759/18-20-9
BULK	41	9505-00-555-8648	96906	MS20995C47
BULK	42	9505-00-248-9842	81348	QQW461
BULK	43	9505-00-293-4208	00624	9C0010-32C
KIT			19207	57K1146
KIT		2510-01-179-4388	19207	5705406
KIT		2520-01-188-7534	19207	5705423
KIT		2530-01-183-2643	19207	5705404
KIT		2530-01-183-2645	19207	5705558

CROSS-REFERENCE INDEXES

FIGURE AND ITEM NUMBER INDEX

FIG.	ITEM	STOCK NUMBER	CAGEC	PART NUMBER
KIT		2530-01-183-2646	19207	5705560
KIT		2530-01-183-6822	19207	5705405
KIT		2590-01-179-1050	64294	46C95-6
KIT		2590-01-183-2644	19207	5705559
KIT		2910-00-152-2033	53964	SA910070
KIT		3020-01-181-6468	97403	13215E6617
KIT		4320-00-874-6726	19207	5702992
KIT		4320-01-176-9442	05842	KP4033-9012
KIT		4320-01-182-7641	19207	57K1145
KIT		4320-01-183-6826	19207	57K1143
KIT		4320-01-183-6902	19207	57K1144
KIT		4330-01-182-9042	19207	5705413
KIT		4330-01-182-9043	19207	5705422
KIT		4330-01-186-7893	19207	5705408
KIT		4330-01-189-9817	19207	5705407
KIT		5330-01-068-6751	15434	3013497
KIT		5330-01-169-3180	15434	3801539
KIT		5330-01-308-0150	19207	57K1015
KIT	1		19207	5705425
KIT	2		19207	5705426
KIT	3		19207	5705427
1	1	3040-00-969-5543	78643	R107
1	2	5310-00-971-7989	96906	MS35691-5
1	3	5307-01-184-5876	97403	13214E2825
1	4	3040-01-179-5795	97403	13214E2536-1
1	5	5310-00-483-6791	96906	MS17829-4F
1	6	5360-01-178-7469	96906	MS24586-263
1	7	3040-01-181-0306	97403	13214E2536-2
1	8	5306-00-225-9093	96906	MS90726-36
1	9	3040-01-177-6601	97403	13211E8987
1	10	5310-00-660-3381	96906	MS21083N5
1	11	5306-01-114-0963	96906	MS90728-60L
1	12	5310-00-045-4007	96906	MS35338-41
1	13	5310-00-080-6004	96906	MS27183-14
1	14	9905-01-174-0956	19207	12325750
1	15	5305-00-984-6193	96906	MS35206-245
1	16	2590-01-171-8246	97403	13211E8999
1	17	9905-01-174-0955	19207	12325749
1	18	5310-00-596-7693	96906	MS35335-31
1	19	5310-00-934-9757	96906	MS35649-282
1	20	5355-01-181-6415	72512	55M
1	21	5360-01-177-4881	97403	13211E9020
1	22	5340-01-174-0489	19207	12332540
1	23	5315-00-616-5514	96906	MS35756-6
1	24	2540-01-068-3071	06853	240069
1	25	2540-01-211-6638	19207	12334770
1	26	5305-00-821-3869	96906	MS90728-65
1	27	5310-00-851-2682	96906	MS35691-17
1	28	2590-01-171-8245	97403	13214E2685
1	29	5365-00-803-7303	96906	MS16624-1075
1	30	5365-01-229-2064	19207	12335264-1

CROSS-REFERENCE INDEXES

FIGURE AND ITEM NUMBER INDEX

FIG.	ITEM	STOCK NUMBER	CAGEC	PART NUMBER
1	31	5310-00-809-8533	96906	MS27183-23
1	32	5315-00-839-2326	96906	MS24665-281
1	33	5315-00-815-8840	96906	MS35810-4
1	34	3040-01-177-4007	97403	13211E8989
1	35	5310-00-925-9642	96906	MS21083N10
1	36	3040-00-133-9967	78643	R111
1	37	5310-00-834-8734	96906	MS35691-37
1	38	5307-01-184-5875	97403	13211E9351-3
1	39	3040-01-171-8265	19207	12355385
1	40	5310-00-902-9369	96906	MS21083N8
1	41	5340-01-171-0053	97403	13211E8986
1	42	5310-00-068-8067	96906	MS17829-8F
1	43	5340-00-985-0823	96906	MS35812-4
1	44	5310-00-975-2075	96906	MS35691-21
1	45	5306-00-051-4081	96906	MS90727-39
1	46	3040-01-176-2975	97403	13211E8990
1	47	5306-01-171-0048	97403	13211E8992
1	48	5365-01-204-8910	19207	12335264-2
1	49	3120-01-181-1625	97403	13214E2644-1
1	50	5306-00-225-8498	96906	MS90725-33
1	51	5310-00-081-4219	96906	MS27183-12
2	1	4730-00-441-2263	96906	MS51510A6
2	2	4710-01-176-9632	97403	13211E9162
2	3	4710-01-179-4348	19207	12332529
2	4	4730-00-803-5776	96906	MS51500A6-2
2	5	4820-01-179-6307	82484	K132-3
2	6	4730-00-289-0383	96906	MS51500A4
2	7	4720-01-179-2927	96906	MS52103A040060R
2	8	4730-00-647-3207	96906	MS51504A4
2	9	4730-00-080-7040	96906	MS51525A6-8
2	10	5330-00-808-0794	96906	MS28778-8
2	11	4730-01-243-3539	97111	H3-63-T8
2	12	4730-01-243-6319	97111	H3-62SL-T8
2	13	4720-01-194-1991	96906	MS52103A060170R
2	14	4730-00-803-5765	96906	MS51504A6-2
2	15	4720-01-140-0063	96906	MS52103A060100R
2	16	4730-00-890-2251	96906	MS51508A6-2
2	17	4730-00-273-6686	81343	8-8 070202CA(CAD)
2	18	4720-01-242-7753	96906	MS52103A080170R
2	19	4730-01-074-0907	96906	MS51525A8-10
2	20	5330-00-285-9842	96906	MS28778-10
2	21	4730-01-243-3538	97111	H4-62SL-T10
2	22	4730-01-243-3540	97111	H4-63-T10
2	23	4720-01-242-7754	96906	MS52103A080560R
2	24	2530-01-163-3321	06853	229293
2	25	4730-00-844-3308	96906	MS51504A8-4
2	26	4730-00-555-1764	96906	MS51504A8
2	27	4730-00-186-3027	81348	WW-F-471BCQBCEB
2	28	4730-00-812-7999	96906	MS51504A6
2	29	4720-01-128-0330	96906	MS52103A060450R

CROSS-REFERENCE INDEXES

FIGURE AND ITEM NUMBER INDEX

FIG.	ITEM	STOCK NUMBER	CAGEC	PART NUMBER
2	30	4730-00-595-1559	96906	MS51500A6
2	31	4730-00-196-1504	24617	192075
2	32	4820-01-169-2512	97403	13211E9547
2	33	5305-00-068-0508	96906	MS90728-6
2	34	5310-00-809-4058	96906	MS27183-10
2	35	5340-01-181-5759	97403	13214E2608
2	36	4720-01-184-5453	96906	MS52103A060920R
2	37	4730-00-193-2709	96906	MS51846-24
2	38		30327	87C1-4
2	39	4720-01-179-2929	01276	FA5783GGG1627
2	40	5340-00-989-9222	96906	MS21333-74
2	41	4720-01-181-8649	96906	MS52103A080930R
2	42	5340-00-050-2740	96906	MS21333-75
2	43	5305-00-757-8122	96906	MS51851-64
2	44	5340-00-921-6993	96906	MS21334-32
2	45		96906	MS52103A080890R
2	46	4730-00-813-9611	96906	MS51500A8
2	47		81348	WW-P-471BCQBCOC
2	48	4730-00-253-4412	96906	MS39230-2
2	49	4730-00-289-5176	81348	WW-P-471ACABUD
2	50	4730-00-289-0382	96906	MS51500A6-8
2	51	4720-01-242-7752	96906	MS52103A060380R
2	52	4710-01-176-9631	97403	13211E9161
2	53	4730-01-192-4729	81348	WW-P-471BCQBCDB
2	54	4820-00-595-2761	06853	205105
3	1	5430-01-278-5727	06853	227885
3	2	5306-00-226-4828	96906	MS90728-35
3	3	5310-00-407-9566	96906	MS35338-45
3	4	5340-01-191-6460	18265	PCO-4906
4	1	5310-00-880-7744	96906	MS51967-5
4	2	5310-00-407-9566	96906	MS35338-45
4	3	5310-00-081-4219	96906	MS27183-12
4	4	2530-00-854-4457	96906	MS53006-1
4	5	5306-00-226-4838	96906	MS90728-45
5	1	2540-01-068-3071	06853	240069
5	2	5306-00-226-4828	96906	MS90728-35
5	3	2530-01-173-4694	06853	101381
5	4	5310-00-081-4219	96906	MS27183-12
5	5	5310-00-245-3424	96906	MS17829-5C
6	1	2530-01-176-1192	06853	7010-05
6	2		06853	102215
6	3	5310-00-763-0038	06853	233997
6	4	5306-00-519-6666	06853	240351
6	5	9905-01-174-0957	97403	13204E3300
6	6	5305-00-253-5615	96906	MS21318-21
6	7	2530-00-270-3878	06853	220636
6	8	5330-00-090-2128	96906	MS35748-1
6	9	4730-00-595-0083	96906	MS35746-1
6	10	9905-01-174-0958	97403	13204E3301
7	1	5305-00-071-2067	96906	MS90728-111
7	2	5310-00-584-5272	96906	MS35338-46

CROSS-REFERENCE INDEXES

FIGURE AND ITEM NUMBER INDEX

FIG.	ITEM	STOCK NUMBER	CAGEC	PART NUMBER
7	3	5310-00-809-5998	96906	MS27183-18
7	4	9515-01-186-5881	19207	12331831
7	5	5305-01-195-7931	96906	MS51981-74L
7	6	5670-01-180-5909	19207	12331977
7	7	9515-01-186-5878	19207	12325836
7	8	9515-01-186-5880	19207	12325848
7	9	5340-01-222-7997	19207	12352570
7	10	9515-01-187-0995	19207	12325835
7	11	5305-00-071-2069	96906	MS90728-113
7	12	2540-01-314-8046	19207	12362072
7	13	5305-00-543-2419	96906	MS90728-61
7	14	5310-00-637-9541	96906	MS35338-46
7	15	5310-00-080-6004	96906	MS27183-14
7	16	2590-00-473-6331	07860	C21452
7	17		19207	7064504
7	18	2540-00-968-4060	19207	8690527
7	19	9515-01-186-5883	19207	12331835
7	20	5305-00-071-2071	96906	MS90728-115
7	21	9515-01-186-5879	19207	12325837
7	22	9515-01-239-1940	19207	12357235
7	23	9515-01-183-6893	19207	12325834
7	24	9515-01-239-1941	19207	12357236
7	25	9515-01-187-9513	19207	12325854
8	1	5340-01-175-0584	92867	X18671
8	2	2590-01-179-4304	19207	12334808
8	3	5310-00-081-4219	96906	MS27183-12
8	4	5310-00-245-3424	96906	MS17829-5C
8	5		19207	12379442
8	6	5315-00-839-5822	96906	MS24665-353
8	7	5315-00-140-1938	96906	MS35810-6
8	8		19207	12379438
8	9	9530-01-326-7774	19207	12379439
8	10		19207	12379443
8	11	5310-00-809-4085	96906	MS27183-16
8	12	5305-01-193-7193	19207	12335098
8	13	3040-01-204-5560	19207	12331956
8	14	5310-00-975-2075	96906	MS35691-21
8	15	5340-00-435-9372	96906	MS21251A8L
8	16	5310-01-109-6746	96906	MS27952-32
8	17	5307-01-185-3544	97403	13211E9545
8	18	5310-00-834-8734	96906	MS35691-37
8	19	5340-00-177-3957	96906	MS35812-11
8	20	3040-01-179-1345	97403	13214E2146
8	21	5310-00-763-8920	96906	MS51967-20
8	22	5315-00-616-5499	96906	MS35756-22
8	23	5305-00-724-7223	96906	MS90728-165
8	24	5310-00-637-9541	96906	MS35338-46
8	25	5305-00-115-9526	96906	MS90725-58
8	26	5340-01-178-2201	97403	13214E2303
8	27	2990-01-176-6122	92867	16382300
8	28	5305-00-990-6444	96906	MS35207-261

CROSS-REFERENCE INDEXES

FIGURE AND ITEM NUMBER INDEX

FIG.	ITEM	STOCK NUMBER	CAGEC	PART NUMBER
8	29	5310-00-014-5850	96906	MS27183-42
8	30	5310-00-045-3296	96906	MS35338-43
8	31	5306-00-226-4834	96906	MS90728-41
8	32	5340-01-218-8562	19207	12332007
8	33	3120-01-181-1629	19207	12331895-6
8	34		19207	12367739
8	35	5340-01-180-2603	97403	13214E2317
8	36	5365-01-177-0952	97403	13214E2316
9	1	2510-01-291-2992	19207	12362113
9	2	2540-00-065-1922	82484	S2309
9	3	2540-01-183-6840	82484	C1100-16
9	4	2510-01-290-3023	19207	12362112
9	5	5330-01-189-9825	97403	13211E9362
9	6	2510-01-231-3821	19207	12357179
9	7	4730-00-647-3207	96906	MS51504A4
9	8	4720-00-165-4776	96906	MS52103A040163R
9	9	4730-01-049-8462	96906	MS51521A4
9	10	4730-00-289-0383	96906	MS51500A4
9	11	2540-01-202-8232	19207	12335324
9	12	2540-00-212-9068	82484	S2280-1
9	13	5310-00-255-4371	82484	C1421-1
9	14		19207	12369133
9	15	5305-00-852-1012	96906	MS51850-66
9	16	5365-01-194-4936	97403	13204E2493
9	17	5330-01-193-0228	97403	13204E2492
9	18	5310-00-823-8804	96906	MS27183-9
9	19		2V507	92314A294
9	20	2510-01-182-8771	97403	13211E8687
9	21	5310-00-080-6004	96906	MS27183-14
9	22	5305-00-942-2196	96906	MS18154-60
9	23	5310-00-809-8541	96906	MS27183-27
9	24	5305-01-196-5572	96906	MS90725-227
9	25	5340-01-183-2619	19207	12334875
10	1		19207	12331969
10	2		19207	12331918-1
10	3		19207	12331919-3
10	4		19207	12331932-1
10	5		19207	12331924-6
10	6		19207	12335057
10	7		19207	12331918-1
10	8		19207	12331919-4
10	9		19207	12331924-6
10	10		19207	12331932-3
10	11	5305-00-852-1012	96906	MS51850-66
10	12		19207	12362132
10	13		19207	12331924-6
10	14		19207	12331932-4
10	15		19207	12331919-5
10	16		19207	12331918-2
10	17	2510-01-290-3020	19207	12362126
10	18	5305-00-078-7039	96906	MS21316-56

CROSS-REFERENCE INDEXES

FIGURE AND ITEM NUMBER INDEX

FIG.	ITEM	STOCK NUMBER	CAGEC	PART NUMBER
10	19	5305-00-446-9901	96906	MS51850-64
10	20		19207	12362137
10	21		19207	12362136
10	22	2590-01-178-5415	19207	12331973
10	23	2510-01-192-6275	97403	13211E9579
10	24	2510-01-291-2963	19207	12362119
10	25		19207	12331924-5
10	26		19207	12331923-13
10	27		19207	12331923-16
10	28		19207	12331923-1
10	29		19207	12331923-14
10	30		19207	12331924-4
10	31		19207	12331923-2
10	32		19207	12331923-4
10	33		19207	12331923-3
10	34		19207	12331924-2
10	35		19207	12331924-1
10	36		19207	12331924-3
10	37		19207	12331923-7
10	38		19207	12331923-15
10	39		19207	12331923-6
10	40		19207	12331919-1
10	41		19207	12331919-2
11	1	2920-01-291-2996	19207	12369102
11	2	2920-01-182-1322	97403	13214E2267
11	3	2920-01-182-1321	97403	13214E2064
11	4	2920-01-182-1320	97403	13211E9059
11	5	2920-01-182-1318	19207	12355285
11	6	2590-01-239-1974	19207	12357204
11	7	6150-01-239-1719	19207	12357205
11	8	2590-01-239-1973	19207	12357211
11	9	2590-01-182-1258	19207	12335448
11	10	2590-01-182-1259	19207	12335449
11	11	5340-00-725-5260	96906	MS21333-125
11	12	5310-00-080-6004	96906	MS27183-14
11	13	5306-01-205-2801	96906	MS90728-57L
11	14	5340-00-050-2740	96906	MS21333-75
11	15	5305-00-764-4479	96906	MS51850-65
11	16	2590-01-182-1257	19207	12335450
11	17	5325-00-783-4754	96906	MS21266-5N
11	18	2590-01-182-1264	19207	12335447-4
11	19	5306-01-112-4340	96906	MS90728-58L
11	20	6150-01-182-1266	19207	12335447-5
12	1		81349	M23053/1-102-0AR
12	2	5940-00-113-9826	96906	MS25036-114
12	3	9905-01-013-6723	81349	M43436/3-1
12	4	5305-00-764-4479	96906	MS51850-65
12	5	5340-00-905-0790	96906	MS21333-65
12	6	9905-00-893-3570	81349	M43436/1-3
12	7	5935-01-070-3679	96906	MS3456W28-11S
12	8		19207	8724763AR

CROSS-REFERENCE INDEXES

FIGURE AND ITEM NUMBER INDEX

FIG.	ITEM	STOCK NUMBER	CAGEC	PART NUMBER
12	9		19207	8724762AR
12	10	5325-01-224-8300	96906	MS35489-112X
12	11	5935-01-147-0148	96906	MS3456W12-5S
12	12		81349	M13486/1-5AR
12	13		81349	M13486/1-3AR
12	14		81349	M23053/1-101-0AR
12	15	5940-00-983-4067	19207	7728777
12	16	5940-01-035-4212	19207	7728780
12	17	5940-00-399-6676	19207	8338564
12	18	5970-00-833-8562	19207	8338562
12	19	5935-00-833-8561	19207	8338561
13	1		19207	12367617
13	2	5930-01-141-5368	81349	M5423/16-01
13	3	5930-00-683-1627	96906	MS24523-29
13	4	5935-01-116-3431	19207	12258943
13	5	5305-00-984-6194	96906	MS35206-246
13	6		19207	12367614
13	7	5310-00-925-9645	96906	MS21083N04
13	8	5310-00-616-3554	96906	MS35335-29
13	9	5330-00-641-4336	96906	MS52000-8
13	10	5305-00-889-2999	96906	MS35206-217
13	11	5330-00-968-1753	96906	MS52000-7
13	12		19207	12367616
13	13		19207	12367615
13	14	5305-00-889-3001	96906	MS35206-231
13	15	5330-00-948-0704	96906	MS52000-10
13	16	5310-00-209-0788	96906	MS35335-30
13	17	5310-00-905-8451	96906	MS21083N06
13	18	5310-00-014-5850	96906	MS27183-42
13	19	5305-00-984-6211	96906	MS35206-264
13	20	5305-00-984-6209	96906	MS35206-262
13	21	5310-00-596-7691	96906	MS35335-32
13	22	5995-01-254-6579	19207	12355487
13	23	5975-00-074-2072	96906	MS3367-1-9
13	24	5999-01-254-6581	19207	12355577
13	25	5310-00-941-6019	96906	MS21083N08
13	26	5310-00-596-7693	96906	MS35335-31
13	27	5330-01-191-3178	19207	12334687
13	28	5310-00-582-5965	02614	N405P4186
13	29	5305-00-071-2506	96906	MS90728-3
14	1		81349	M23053/5-103-9AR
14	2		82577	M22759/18-20-9AR
14	3		81349	M22759/18-16-9AR
14	4	5975-00-074-2072	96906	MS3367-1-9
14	5	9905-00-893-3570	81349	M43436/1-3
14	6	5935-01-102-7124	71468	CA3100R32A10S-BO 5F80
14	7		19207	8724762AR
14	8	5940-00-113-3137	96906	MS20659-101
14	9	5935-01-110-1941	96906	MS3452W22-14S
14	10	5935-01-085-3305	96906	MS3452W20-4P

CROSS-REFERENCE INDEXES

FIGURE AND ITEM NUMBER INDEX

FIG.	ITEM	STOCK NUMBER	CAGEC	PART NUMBER
14	11		19207	8724764AR
14	12	5935-01-226-8367	96906	MS3452W28-11P
15	1	6625-01-175-2503	19207	12258937-2
15	2		96906	MS35338-103
15	3	5305-00-834-1810	96906	MS35309-359
15	4	5305-00-206-2508	96906	MS35215-53
15	5	5310-00-261-8278	96906	MS35338-100
15	6	5310-00-045-5207	96906	MS15795-908
15	7	5310-00-582-5965	02614	N405P4186
15	8	5305-00-225-3843	96906	MS90728-8
15	9	5305-00-993-1851	96906	MS35207-267
15	10	5935-01-059-0117	19207	11674728
15	11	5340-01-059-0114	19207	11675004
15	12	5935-01-044-8382	19207	11682345
15	13	5330-01-059-4286	19207	11674729
15	14	5970-01-044-8391	19207	11674730
15	15	5310-00-014-5850	96906	MS27183-42
15	16	5310-00-902-6676	96906	MS21083N3
15	17	5306-00-226-4841	96906	MS90728-48
15	18	5310-00-407-9566	96906	MS35338-45
15	19	2590-00-083-0266	19207	10894808
16	1	6160-01-182-7492	19207	12332466
16	2	6140-00-404-2669	96906	MS53046-3
16	3	5310-00-087-4652	96906	MS51922-17
16	4	5310-00-809-4061	96906	MS27183-15
16	5	5307-01-183-6855	19207	12334679-2
16	6	5307-01-182-7581	19207	12334679-1
16	7	6140-01-210-1964	96906	MS52149-1
16	8	5306-01-119-6763	96906	MS90728-64L
16	9	5310-00-080-6004	96906	MS27183-14
16	10	5325-01-224-8301	96906	MS35489-85X
16	11	5310-00-809-4058	96906	MS27183-10
16	12	5306-01-194-0587	96906	MS90728-9L
16	13	2590-00-040-2075	19207	7539197
16	14	5306-01-191-2451	96906	MS90728-109L
16	15	5310-00-809-5998	96906	MS27183-18
16	16	9515-01-189-6488	19207	12331834
16	17	6135-01-217-3292	19207	12355316
17	1	5940-00-549-6583	96906	MS75004-2
17	2	2590-01-180-9915	19207	12335447-3
17	3	5940-00-549-6581	96906	MS75004-1
17	4	2590-01-182-1263	19207	12335447-1
17	5	2590-01-182-1256	19207	12335447-2
17	6	6140-01-182-1265	19207	12335447-6
17	7	2590-01-180-9914	19207	12335451
18	1	5365-00-090-5426	19207	7722333
18	2	5935-00-686-2595	19207	8724258
18	3	5310-00-393-6685	19207	7723309
18	4	5975-00-771-6634	19207	7716634
18	5		19207	8724763AR
18	6	5935-00-572-9180	19207	8338566

CROSS-REFERENCE INDEXES

FIGURE AND ITEM NUMBER INDEX

FIG.	ITEM	STOCK NUMBER	CAGEC	PART NUMBER
18	7	5935-00-214-0904	19207	7982907
18	8	5999-00-057-2929	96906	MS27148-2
18	9	5310-00-833-8567	19207	8338567
18	10	5999-00-057-2929	96906	MS27148-2
18	11	5940-00-399-6676	19207	8338564
18	12	5970-00-833-8562	19207	8338562
18	13	5935-00-833-8561	19207	8338561
18	14	9905-01-013-8723	81349	M43436/3-1
18	15	9905-00-893-3570	81349	M43436/1-3
18	16		81349	M23053/1-101-0AR
18	17	5940-00-705-6708	19207	7C56708
18	18	5935-00-622-2831	96906	MS3456W14S2S
18	19		81349	M13486/1-3AR
18	20	5940-00-314-0479	19207	7728778
18	21	5935-01-019-5156	96906	MS3456W22-23S
18	22	5340-00-057-3026	96906	MS21333-117
18	23	5305-00-764-4479	96906	MS51850-65
18	24	5340-00-905-8790	96906	MS21333-65
18	25	5340-00-929-1794	96906	MS21334-31
18	26	5305-00-446-9901	96906	MS51850-64
18	27	5340-00-057-2904	96906	MS21333-71
18	28	5340-00-764-7051	96906	MS21333-69
18	29	5340-00-954-6014	96906	MS21333-121
18	30	5325-00-939-9302	96906	MS35489-90
18	31		81349	M13486/1-5AR
18	32	5935-01-149-5165	11083	7NS738
18	33	5999-01-150-8808	71468	031-1267-001
18	34	5315-01-156-6314	71468	030-2196-001
19	1	5355-00-687-2917	96906	MS91528-3C2B
19	2	5930-00-823-0482	81349	M5423-09-02
19	3	1005-00-600-5294	19207	10893855
19	4	2590-00-735-4063	96906	MS53001-1
19	5	5310-00-582-5965	02614	N405F41B6
19	6	5305-00-068-0502	96906	MS90725-6
20	1	5310-00-393-6685	19207	7723309
20	2	5365-00-090-5426	19207	7722333
20	3	5330-01-197-4422	97403	13211E9046
20	4		19207	8724763AR
20	5	5935-00-846-3884	96906	MS75021-2
20	6	5935-00-773-1428	19207	7731428
20	7	5305-00-225-3841	96906	MS90728-11
20	8	5940-00-705-6709	19207	7C56709
20	9	5310-00-209-0786	96906	MS35335-33
20	10	5310-00-483-8792	96906	MS17829-4C
20	11		81349	M13486/1-5AR
20	12	5930-01-180-5628	06046	SG202-48006
20	13	3040-01-199-3226	06046	029-20541
20	14	3040-01-164-7902	97403	13204E2509
20	15	6680-01-182-1280	97403	13211E9122
20	16	5330-00-808-0794	96906	MS28778-8
20	17	5306-01-119-9321	96906	MS90728-8L

CROSS-REFERENCE INDEXES

FIGURE AND ITEM NUMBER INDEX

FIG.	ITEM	STOCK NUMBER	CAGEC	PART NUMBER
20	18	5310-00-809-4058	96906	MS27183-10
20	19	6680-01-182-1251	47876	2-401-40
20	20	5330-01-192-9332	19207	11652124
20	21	5930-00-812-8888	06853	228600
21	1	5940-00-399-6676	19207	8338564
21	2	5310-00-298-8903	19207	8338570
21	3	2590-00-695-9076	19207	8338569
21	4		81349	M13486/1-5AR
21	5	5935-00-833-8561	19207	8338561
21	6	5970-00-833-8562	19207	8338562
21	7	5935-01-026-5872	96906	MS3456W16-10S
21	8		81349	M23053/1-101-0AR
21	9	5940-00-705-6706	19207	7056706
21	10	5940-00-705-6707	19207	7056707
21	11	5305-00-764-4479	96906	MS51850-65
21	12	5340-00-922-6300	96906	MS21333-77
21	13		96906	MS21334-
21	14	5340-00-731-9611	96906	MS21334-34
21	15	5935-00-399-6673	19207	7982401
21	16	5340-00-984-8540	96906	MS21333-102
21	17		81349	M13486/1-3AR
21	18	5935-00-622-2831	96906	MS3456W14S2S
21	19	5935-01-026-2231	96906	MS3450W16-10P
21	20	5999-00-057-2929	96906	MS27148-2
21	21	5310-00-833-8567	19207	8338567
21	22	5935-00-572-9180	19207	8338566
21	23	9905-00-935-3863	81349	M43436/4-1
21	24		81349	M23053/1-102-0AR
21	25		81349	M13486/1-7AR
21	26		59730	TGE
21	27	5935-01-154-6233	71468	120-1806-000
21	28	5999-01-150-8808	71468	031-1267-001
21	29	5315-01-156-6314	71468	030-2196-001
21	30	5935-01-026-8549	96906	MS3450W16-10S
21	31		81349	M13486/2-2AR
21	32	5340-00-764-7051	96906	MS21333-69
21	33	5310-00-596-7691	96906	MS35335-32
21	34	5340-00-079-7837	96906	MS21333-67
21	35	5935-00-767-7936	96906	MS27145-1
21	36	5935-01-041-9179	96906	MS3456W20-4S
21	37		19207	8724763AR
21	38	5935-01-244-8171	96906	MS3450W36-9P
21	39		19207	8724762AR
21	40		19207	8724764AR
21	41	5340-00-905-0790	96906	MS21333-65
21	42	9905-00-893-3570	81349	M43436/1-3
21	43	5340-00-989-1771	96906	MS21333-123
22	1	5935-00-823-5322	96906	MS25251-16
22	2	5935-00-132-2677	96906	MS3111F12-3P
22	3	9905-01-013-8723	81349	M43436/3-1
22	4	9905-00-893-3570	81349	M43436/1-3

CROSS-REFERENCE INDEXES

FIGURE AND ITEM NUMBER INDEX

FIG.	ITEM	STOCK NUMBER	CAGEC	PART NUMBER
22	5		81349	M13486/1-3AR
22	6		81349	M23053/1-102-0AR
22	7	5940-00-914-6054	19207	7728640
22	8	5940-01-035-4212	19207	7728780
23	1	5340-01-182-1079	19207	12332489
23	2	5310-00-080-6004	96906	MS27183-14
23	3	5310-00-637-9541	96906	MS35338-46
23	4	5305-00-115-9526	96906	MS18154-58
23	5	5310-00-247-3360	03018	C1420
23	6	5310-00-809-4058	96906	MS27183-10
23	7	5305-00-225-3843	96906	MS90728-8
23	8	5340-01-182-1292	19207	12332488
23	9	2540-01-313-7821	19207	12369101
24	1	5930-00-296-6318	96906	MS39061-1
24	2	5930-00-307-8856	96906	MS51113-1
24	3	5930-00-699-9438	96906	MS39060-2
24	4	5305-00-995-3444	96906	MS35207-266
24	5	5930-00-130-5349	19207	5381088
24	6	5305-00-984-6191	96906	MS35206-243
24	7	6625-01-086-9580	96906	MS24532-2 REV G
24	8	6680-00-933-3600	96906	MS24544-2
24	9	5305-00-889-3000	96906	MS35206-230
24	10	2590-00-745-7892	19207	10901121
24	11	5340-01-239-1863	19207	12357148
24	12	5930-00-226-6429	96906	MS39061-4
24	13	5930-00-133-9629	19207	11640178
24	14	2590-01-182-1261	19207	12334676
24	15	5930-00-548-8046	81349	7954899
24	16	9905-00-752-4649	81349	M43436/1-1
24	17	5935-00-695-9077	19207	8338572
24	18	5310-00-595-7044	19207	8338573
24	19	5999-00-925-6495	96906	MS27148-1
24	20	2590-00-695-9076	19207	8338569
24	21	5310-00-298-8903	19207	8338570
24	22	5940-00-399-6676	19207	8338564
24	23	5310-00-941-6019	96906	MS21083N08
24	24	5310-00-596-7693	96906	MS35335-31
24	25	5930-00-655-4248	96906	MS24524-21
24	26	5305-00-984-6196	96906	MS35206-248
25	1	6210-00-745-7649	49367	P400136-1
25	2	6240-00-266-9940	96906	MS25231-1829
25	3	5330-00-297-6329	19207	7358626
25	4	6210-00-548-0504	19207	7358672
25	5	5305-00-984-6191	96906	MS35206-243
25	6	6220-01-182-1083	74400	M24728
25	7	6240-00-001-9405	88204	24MB
25	8	6210-00-635-5686	19207	7971111
25	9	6240-00-266-9940	96906	MS25231-1829
25	10	5330-00-297-6329	19207	7358626
25	11	6210-00-548-0504	19207	7358672
25	12	6210-00-699-9457	23382	16B1582726

CROSS-REFERENCE INDEXES

FIGURE AND ITEM NUMBER INDEX

FIG.	ITEM	STOCK NUMBER	CAGEC	PART NUMBER
25	13	6240-00-266-9940	96906	MS25231-1829
25	14	5330-00-297-6329	19207	7358626
25	15	6210-00-299-5564	19207	7358622
26	1	9905-01-192-0284	97403	13204E2522
26	2	9905-01-192-2482	97403	13204E2523
26	3	9905-01-246-6653	19207	12357206
26	4	9905-01-192-0288	97403	13214E2934
26	5	5305-00-253-5615	96906	MS21318-21
26	6	9905-01-192-2483	97403	13214E2933
26	7	9905-01-186-7322	19207	12332152
26	8	9905-01-186-7324	19207	12332154
26	9	9905-01-186-7323	19207	12332153
26	10	9905-01-192-0287	97403	13204E2528
26	11	9905-01-192-0286	97403	13204E2527
26	12	9905-01-192-2804	97403	13204E2526
26	13	9905-01-192-0285	97403	13204E2525
27	1	5310-00-627-6128	96906	MS35335-35
27	2	5305-00-115-9526	96906	MS18154-58
27	3	5310-00-483-8790	96906	MS17829-6C
27	4	5305-00-942-2196	96906	MS18154-60
27	5	6695-01-252-5819	19207	12357146
28	1		97403	13204E2519
28	2	5340-01-189-6465	97403	13211E9025
28	3	5310-00-596-7691	96906	MS35335-32
28	4	5310-00-934-9758	96906	MS35649-202
28	5	6150-01-182-1262	97403	13211E9093
28	6	6210-00-699-9458	19207	8376500
28	7	6240-00-266-9940	96906	MS25231-1829
28	8	5330-00-297-6329	19207	7358626
28	9	6210-00-337-7345	19207	7358621
28	10	6680-01-158-4091	06046	53501/47686
28	11	6240-00-155-8707	96906	MS25231-1819
28	12	6680-01-158-4090	06046	54052/47685
28	13	6240-00-155-8707	96906	MS25231-1819
28	14	6620-01-248-0358	19207	12357149
28	15	6685-01-248-1707	19207	12357150
28	16	6625-00-936-2139	96906	MS24543-2
28	17	6685-01-248-1706	19207	12357151
28	18	5310-00-247-3360	03018	C1420
28	19	5310-00-809-4058	96906	MS27183-10
28	20	5305-00-225-3843	96906	MS90728-8
28	21	5305-00-984-6194	96906	MS35206-246
28	22	5310-00-596-7693	96906	MS35335-31
28	23	5305-00-984-6212	96906	MS35206-265
29	1	5305-01-106-1113	96906	MS51850-1
29	2	9905-01-192-0289	97403	13204E2516
29	3	9905-01-191-9595	97403	13204E2515
29	4	9905-01-192-4956	97403	13204E2514
29	5	9905-01-192-4955	97403	13204E2513
29	6	9905-01-192-2803	97403	13204E2512
30	1	5305-00-984-6197	96906	MS35206-249

CROSS-REFERENCE INDEXES

FIGURE AND ITEM NUMBER INDEX

FIG.	ITEM	STOCK NUMBER	CAGEC	PART NUMBER
30	2	5925-00-026-4767	81349	M13516/1-1
30	3	5310-00-559-0070	96906	MS35333-38
30	4	5310-00-934-9757	96906	MS35649-282
30	5	5305-00-149-6618	96906	MS51850-48
30	6	5925-00-803-4424	81349	M13516/1-2
30	7	5925-00-333-1584	81349	M13516/1-4
30	8	5305-01-196-0222	96906	MS51850-25
30	9	5310-00-209-0788	96906	MS35335-30
30	10	5945-00-225-6692	96906	MS24149D1
30	11	5305-00-145-6367	96906	MS51850-65
30	12	5945-01-182-1272	19207	12325748
30	13	5930-00-133-9629	19207	11640178
30	14	6220-01-182-1082	97403	13214E2687
30	15	6240-00-155-7836	96906	MS25237-327
30	16	6210-00-079-8943	81349	LC12GN2
30	17	5340-01-182-1080	97403	13214E2688
30	18	5930-00-730-6623	19207	7748628
30	19	5310-00-080-6004	96906	MS27183-14
30	20	5310-00-637-9541	96906	MS35338-46
30	21	5305-00-115-9526	96906	MS18154-58
30	22	9905-01-013-6723	81349	M43436/3-1
30	23	5935-00-833-8561	19207	8338561
30	24	5970-00-833-8562	19207	8338562
30	25	5940-00-399-6676	19207	8338564
30	26	5935-00-572-9180	19207	8338566
30	27	5310-00-833-8567	19207	8338567
30	28	5999-00-057-2929	96906	MS27148-2
30	29	5935-00-565-9503	96906	MS25251-12
30	30	9905-01-182-7485	19207	12332237
30	31	5310-00-209-0786	96906	MS35335-33
30	32	5305-00-068-0502	96906	MS90725-6
30	33	6350-00-772-7664	19207	8675930
30	34	5930-00-972-3314	96906	MS27240-1
30	35		81349	M23053/4-102-0AR
30	36	5999-01-150-6808	71468	031-1267-001
30	37	5315-01-156-6314	71468	030-2196-001
30	38	5935-01-152-6814	71468	120-1809-000
31	1	5930-01-163-3196	96906	MS90530-7
31	2	5305-00-984-6201	96906	MS35206-253
31	3	5310-00-045-3299	96906	MS35338-42
31	4	5930-01-182-1223	09049	690PM1095
31	5	6685-00-814-8271	96906	MS24537-1
31	6	5930-01-163-3197	09049	607GB526
31	7	5930-01-182-7486	09049	607GM532
32	1	5306-01-113-0525	96906	MS90728-31
32	2	5310-00-809-4058	96906	MS27183-10
32	3	5305-00-889-2999	96906	MS35206-217
32	4	5340-01-189-6463	19207	12325757
32	5	5310-00-193-7577	96906	MS35333-36
32	6	5310-00-934-9739	96906	MS35649-242
32	7	5340-01-189-6464	19207	12325758

CROSS-REFERENCE INDEXES

FIGURE AND ITEM NUMBER INDEX

FIG.	ITEM	STOCK NUMBER	CAGEC	PART NUMBER
32	8	5306-01-175-7558	96906	MS90728-61
33	1	2590-01-254-6580	19207	12355485
33	2	2590-01-182-4138	97403	13204E2511
33	3	6150-01-182-1267	97403	13214E2703
34	1		81349	M13486/1-5AR
34	2		81349	M13486/1-7AR
34	3		81349	M23053/1-103-0AR
34	4	5940-00-800-7470	19207	7056712
34	5		81349	M13486/1-9AR
34	6		81349	M23053/1-102-0AR
34	7	5940-00-114-1315	96906	MS20659-142
34	8		81349	M23053/1-101-0AR
34	9	5940-00-113-3148	96906	MS20659-164
34	10	5940-00-705-6708	19207	7056708
34	11	5935-01-154-6233	71468	120-1806-000
34	12	5999-01-150-8808	71468	031-1267-001
34	13	5315-01-156-6314	71468	030-2196-001
34	14	5340-00-833-3049	96906	MS21333-127
34	15	5935-01-149-5165	11083	7N9738
34	16	5940-00-705-6702	59730	TG2
34	17	5940-00-705-6706	19207	7056706
34	18	5340-00-057-3037	96906	MS21333-111
34	19	5340-00-057-3026	96906	MS21333-117
34	20	9905-01-013-8723	81349	M43436/3-1
34	21	5940-00-399-6676	19207	8338564
34	22	5970-00-833-8562	19207	8338562
34	23	5935-00-833-8561	19207	8338561
34	24		81349	M13486/1-3AR
34	25	5940-00-113-3138	96906	MS20659-102
34	26	5940-00-113-3145	19207	7728779
34	27	5975-00-660-5962	19207	8724494
34	28	5340-00-725-5280	96906	MS21333-125
34	29	5935-01-077-2628	96906	MS3456W22-14P
34	30		19207	8724762AR
34	31	9905-00-893-3570	81349	M43436/1-3
34	32	5935-01-247-5770	96906	MS3456W36-9S
34	33		19207	8724763AR
34	34		19207	8724764AR
35	1	5305-00-068-0500	96906	MS90725-3
35	2	5310-00-582-5965	02614	N405P4186
35	3	5340-01-185-0456	19207	12332156
35	4	5305-00-959-1082	96906	MS16995-18
35	5	5310-00-579-0079	96906	MS35333-37
35	6	5945-00-754-9484	96906	MS24140-D1
35	7	6150-01-182-1260	97403	13214E2702
35	8	5310-00-596-7691	96906	MS35335-32
35	9	5305-00-757-8122	96906	MS51851-64
36	1	5930-01-181-6114	09049	607GM531
36	2	4730-00-177-6166	81343	4-4-4 140424C
36	3	6620-00-993-5546	96906	MS24539
36	4	5930-01-180-5628	06046	SG202-48006

CROSS-REFERENCE INDEXES

FIGURE AND ITEM NUMBER INDEX

FIG.	ITEM	STOCK NUMBER	CAGEC	PART NUMBER
36	5	3040-01-195-3226	06046	029-20541
36	6	6680-01-114-7653	19207	12258931-1
36	7	6680-01-182-1078	97403	13214E2830
36	8	4730-00-203-0920	88044	AN914-1S
36	9	4730-00-226-8874	19207	12325823
36	10	6695-01-146-7132	19207	12258932-7
36	11	5935-00-900-6281	96906	MS27147-1
37	1	9515-01-181-9515	19207	12332361
37	2	5306-01-198-1700	96906	MS90727-63L
37	3	5995-01-182-1324	19207	12325765
37	4	9515-01-181-9514	19207	12332360
37	5	2920-01-182-1323	19207	12325747
37	6	5310-00-596-7691	96906	MS35335-32
37	7	5305-00-984-6212	96906	MS35206-265
37	8	5310-00-975-2075	96906	MS35691-21
38	1	5935-00-805-4991	96906	MS3106R14S7S
38	2	9905-00-893-3570	81349	M43436/1-3
38	3		81349	M13486/2-2AR
38	4	5340-00-809-1492	96906	MS21333-100
38	5	5306-01-112-8683	96906	MS90728-1L
38	6	9905-00-935-3863	81349	M43436/4-1
38	7	5935-01-026-2217	96906	MS3456W16-10P
39	1	5935-00-517-8519	96906	MS3456W14S6S
39	2	5306-01-113-0525	96906	MS90728-3L
39	3	5340-00-809-1492	96906	MS21333-100
39	4	5940-00-314-0479	19207	7728778
39	5	9905-00-935-3863	81349	M43436/4-1
39	6	5935-00-115-2307	96906	MS27144-2
39	7	9905-00-893-3570	81349	M43436/1-3
39	8		81349	M13486/1-3AR
39	9	5935-01-026-5872	96906	MS3456W16-10S
39	10		81349	M13486/2-2AR
40	1	5935-00-899-3131	96906	MS3108R20-15S
40	2	5935-01-169-0155	81349	M85049/1-12B
40	3	5305-00-764-4479	96906	MS51850-65
40	4	5340-00-225-8313	96906	MS21333-13
40	5	5340-00-050-2740	96906	MS21333-75
40	6	5310-00-596-7691	96906	MS35335-32
40	7	2590-01-182-8765	19207	12334763
40	8		81349	M13486/10-1AR
40	9	9905-00-893-3570	81349	M43436/1-3
40	10	5999-00-926-3144	96906	MS27148-3
40	11	5310-00-656-0067	19207	8724497
40	12	5935-00-691-5591	19207	8724495
40	13	5940-00-705-6709	19207	7056709
40	14		96906	M43436/1-3
41	1	5305-00-889-2997	96906	MS35206-215
41	2	5310-00-543-2410	96906	MS35338-40
41	3		96906	MS3102R20-15P
41	4	5330-01-193-0208	97403	13214E2582
41	5		81349	M23053/1-201-0AR

CROSS-REFERENCE INDEXES

FIGURE AND ITEM NUMBER INDEX

FIG.	ITEM	STOCK NUMBER	CAGEC	PART NUMBER
41	6	9905-00-893-3570	81349	M43436/1-3
41	7		81349	MI3486/1-5AR
41	8	9905-00-935-3863	81349	M43436/4-1
41	9	5999-00-057-2929	96906	MS27148-2
41	10	5310-00-833-8567	19207	8338567
41	11	5935-00-572-9180	19207	8338566
42	1	5999-00-057-2929	96906	MS27148-2
42	2	5310-00-833-8567	19207	8338567
42	3	5935-00-572-9180	19207	8338566
42	4		81349	M13486/1-5AR
42	5	9905-00-935-3863	81349	M43436/4-1
42	6	9905-00-893-3570	81349	M43436/1-3
42	7	5935-00-833-8561	19207	8338561
42	8	5970-00-833-8562	19207	8338562
42	9	5940-00-399-6676	19207	8338564
43	1	2590-01-189-6404	97403	13214E2944
43	2	5935-00-443-5076	19207	11592745
43	3	5999-00-485-8954	77820	10-33644
43	4	5365-00-772-2322	19207	7722322
43	5	5330-00-047-4096	19207	7972333
43	6		19207	11592847
43	7	5935-00-771-8192	19207	7723475
43	8	5315-00-695-6223	19207	7064704
43	9		81349	M13486/1-5AR
43	10	5305-00-984-4983	96906	MS35206-226
43	11	5310-00-209-0788	96906	MS35335-30
43	12	5340-00-647-3933	19207	7739925
43	13	5305-00-068-0502	96906	MS90725-6
43	14	5310-00-809-4058	96906	MS27183-10
43	15	5330-01-193-0186	97403	13214E2945
43	16	9905-00-935-3863	81349	M43436/4-1
43	17	5935-00-399-6673	19207	7982401
43	18	5940-00-399-6676	19207	8338564
43	19	5970-00-833-8562	19207	8338562
44	1	6240-00-047-4097	96906	MS53022-1
44	2	6220-01-182-7606	74400	M13158
44	3	6240-00-643-0687	96906	MS17165-4578
44	4	5310-00-763-8905	96906	MS51968-20
44	5	5310-00-823-8803	96906	MS27183-21
44	6	5310-00-880-6695	96906	MS35335-39
44	7	5310-00-225-6408	96906	MS51922-53
44	8	5305-00-942-2196	96906	MS18154-60
44	9	5310-00-627-6128	96906	MS35335-35
44	10	6220-01-093-4439	19728	EC19522
44	11	6220-00-337-7463	96906	MS51073-1
44	12	5310-00-550-1130	96906	MS35333-40
44	13	5305-00-068-0502	96906	MS90725-6
44	14	9905-00-182-5041	19207	11614174-1
45	1	6220-00-933-9521	19207	10922309
45	2	5330-00-047-4104	19207	7972350
45	3	6240-00-044-6914	96906	MS35478-1683

CROSS-REFERENCE INDEXES

FIGURE AND ITEM NUMBER INDEX

FIG.	ITEM	STOCK NUMBER	CAGEC	PART NUMBER
45	4	6220-00-699-8105	19207	8744399
45	5	5305-00-022-8292	29092	5P327-1
45	6	5310-00-209-0788	96906	MS35335-30
45	7	5320-00-115-1544	19207	8386470
45	8	5310-00-741-2834	19207	7354530
45	9	5360-00-772-9800	19207	7729800
45	10	6220-00-202-8591	19207	7972339
45	11	5330-00-047-4098	19207	7972345
45	12	6220-00-557-8229	19207	7962266
45	13	5305-01-094-9275	21450	420494
45	14	5310-00-559-0070	96906	MS35333-38
45	15	6220-00-179-4946	19207	7972337
45	16	5330-00-047-4099	19207	7972346
45	17	6240-00-368-4972	96906	MS18003-4811
45	18		96906	MS16655-1
45	19	5935-00-570-5859	96906	MS16655-2
45	20	5325-00-899-1505	19207	7972327
45	21	6220-00-179-4834	19207	7972358
45	22	2590-00-045-9901	19207	11594253
45	23	5330-00-167-9773	19207	10884510
45	24	5310-00-061-1258	96906	MS45904-76
45	25	5305-00-115-9526	96906	MS18154-58
45	26	6220-00-937-4721	19207	7972354
45	27	5320-00-994-7076	96906	MS20613-4P4
45	28	5310-00-797-2040	19207	7972351
45	29	6220-00-179-8976	19207	7972330
45	30	6695-00-179-4945	19207	7972331
45	31	5330-00-047-4105	19207	7972326
45	32	6220-00-772-9788	19207	7729788
45	33	6220-00-699-8104	19207	8744290
45	34	5330-00-948-0964	19207	11591041
45	35	6220-00-999-5286	19207	7972359
45	36	5305-00-984-4984	96906	MS35206-227
45	37	5310-00-579-0079	96906	MS35333-37
45	38	6220-00-934-8307	19207	7972334
45	39	6220-00-699-8103	19207	8744293
45	40	5330-01-094-9020	19207	12290671
45	41	6220-00-999-5285	19207	7972357
45	42	5310-00-596-7693	96906	MS35335-31
45	43	5305-00-984-6194	96906	MS35206-246
45	44	5315-00-814-3531	96906	MS16562-50
45	45	6240-00-019-0877	96906	MS15570-1251
45	46	5305-01-196-0217	21450	420497
45	47	5325-00-353-0948	19207	7526007
45	48	6220-00-557-8228	19207	7962265
45	49	5305-00-854-2185	19207	7972328
45	50	5310-01-142-0326	96906	MS35333-125
45	51	5330-00-047-4101	19207	7972340
45	52	6150-00-916-2124	19207	8744294
46	1	5999-00-057-2929	96906	MS27148-2
46	2	5310-00-833-8567	19207	8338567

CROSS-REFERENCE INDEXES

FIGURE AND ITEM NUMBER INDEX

FIG.	ITEM	STOCK NUMBER	CAGEC	PART NUMBER
46	3	5935-00-572-9180	19207	8338566
46	4		81349	M43436/4-1
46	5		19207	11639520
46	6	6240-00-019-3093	96906	MS15570-623
46	7	6240-00-044-6914	96906	MS35478-1683
46	8	5330-00-462-0907	19207	11639519-2
46	9	6220-00-179-4324	19207	11639535
46	10	6240-00-019-0877	96906	MS15570-1251
47	1	5340-00-732-0642	19207	7320642
47	2	5305-00-737-5694	19207	7320641
47	3	6220-00-796-2241	19207	7962241
47	4	5305-00-633-0785	19207	8335233
47	5	6240-00-295-2668	96906	MS35478-1691
47	6	6250-00-337-7465	19207	7064962
47	7	5310-00-045-3299	96906	MS35338-42
47	8	6250-00-169-4162	19207	7064896
47	9	5305-00-889-3002	96906	MS35206-242
47	10	5305-01-048-6596	19207	7320687
47	11	5330-01-078-3985	19207	8335240
47	12	6250-01-141-1543	19207	8335242
47	13	6250-00-112-0475	19207	10942115
47	14	5330-00-796-2254	19207	7962254
47	15		19207	8744898
47	16	5330-00-173-4770	19207	7962251
47	17	6150-00-055-1751	19207	7064899
47	18	5935-00-622-4948	19207	7064961
47	19	5305-00-984-6189	96906	MS35206-241
47	20	5305-00-984-4988	96906	MS35206-228
47	21	5310-00-132-1438	19207	8744897
47	22	6240-00-019-3093	96906	MS15570-623
47	23	5325-00-623-0928	19207	7064900
47	24	5330-01-186-5856	19207	12343072
47	25	6220-01-123-1353	19207	12314082
47	26	5330-00-796-2242	19207	7962242
47	27	6220-00-796-2244	19207	7962244
47	28	5340-00-087-9668	19204	7962246
47	29	6220-00-087-9667	19207	7962247
47	30	5930-00-732-0651	19207	7320651
47	31	5305-00-984-4983	96906	MS35206-226
47	32	5310-00-209-0788	96906	MS35335-30
47	33	5310-00-732-0654	19207	7320654
47	34	5330-00-732-0655	19207	7320655
47	35	5310-00-732-0652	19207	7320652
47	36	5305-00-732-0657	19207	7320657
47	37	5360-00-705-7189	19207	7057189
47	38	5930-00-705-7187	19207	7057187
47	39	5355-00-732-0656	19207	7320656
47	40	5305-00-054-6654	96906	MS51957-30
48	1	4730-00-618-5372	96906	MS51521A6
48	2	4710-01-190-0841	19207	12334937
48	3	4730-00-441-2263	96906	MS51510A6

CROSS-REFERENCE INDEXES

FIGURE AND ITEM NUMBER INDEX

FIG.	ITEM	STOCK NUMBER	CAGEC	PART NUMBER
48	4	4730-00-706-8711	96906	MS51534A6-4
48	5	4730-01-024-7933	96906	MS51531-B6
48	6	5340-00-809-1490	96906	MS21333-98
48	7	4710-01-190-0840	19207	12334936
48	8	5310-00-809-4058	96906	MS27183-10
48	9	5305-01-045-8389	80064	2585164-279
48	10	5310-00-721-8000	96906	MS25082-10
48	11	5310-00-985-0782	96906	MS27151-28
48	12	4730-00-350-4437	19207	5227606
48	13	4210-00-796-8260	19207	7968260
48	14	5340-00-902-0426	96906	MS51938-6
48	15	4710-01-180-5555	57371	C904-14
48	16	4730-00-289-0383	96906	MS51500A4
48	17	4210-01-125-4294	19207	12307556
48	18	5340-00-809-1492	96906	MS21333-100
48	19	5330-00-808-0794	96906	MS28778-8
48	20	4210-00-146-2963	80064	2588273
48	21	4730-00-080-7040	96906	MS51525A6-8
48	22	4710-01-190-0842	19207	12334938
48	23	4710-01-238-1888	19207	12355290
48	24	5330-01-254-4385	19207	12357165
48	25	5340-01-254-6556	19207	12355423
48	26	5306-01-112-4341	96906	MS90728-5L
48	27	4210-01-182-7420	57371	C-904-19.5 INCH
48	28	4730-00-322-8457	96906	MS51500A6-6
48	29	4210-01-109-7949	57371	C904-21.5
48	30	5315-00-811-9106	96906	MS20392-3C43
48	31	4210-00-885-5724	00624	53336
48	32	5315-00-839-2325	96906	MS24665-132
48	33	4710-01-180-5637	19207	12334941
48	34	4730-00-762-1239	96906	MS515318B
48	35	4730-00-676-3075	96906	MS51534A8-4
48	36	5310-00-081-4219	96906	MS27183-12
48	37	5310-00-088-0553	96906	MS21044N5
48	38	5305-01-187-9547	80064	2585164-296
48	39	4730-00-822-5609	96906	MS51527A8
48	40	5340-00-057-3052	96906	MS21333-114
48	41	4720-01-177-4712	96906	MS52103A0E0380R
48	42	5306-00-051-4077	96906	MS90727-35
48	43	5306-01-195-7921	96906	MS90728-29L
48	44	4730-00-797-6566	96906	MS51510A8
48	45	4730-00-786-2247	96906	MS51534A8-6
49	1	4210-01-107-3298	19207	12297014
49	2	6685-01-107-3334	33525	282107
49	3	4730-00-720-2038	88044	AN915-1J
49	4	4210-01-107-3418	33525	878009
49	5		19207	12296731
49	6	9905-01-107-3274	19207	12296789
49	7	9905-01-107-3429	80064	2588282
50	1	4730-00-555-1764	96906	MS51504A8
50	2	5305-00-191-3641	96906	MS51851-65

CROSS-REFERENCE INDEXES

FIGURE AND ITEM NUMBER INDEX

FIG.	ITEM	STOCK NUMBER	CAGEC	PART NUMBER
50	3	5340-00-050-2740	96906	MS21333-75
50	4	4720-01-243-6289	96906	MS52103A080880R
50	5	5340-01-180-6780	19207	12334993
50	6	5340-01-180-6781	19207	12334994
50	7	4730-01-074-0907	96906	MS51525A8-10
50	8	5330-00-285-9842	96906	MS28778-10
50	9	4730-01-243-3540	97111	H4-63-T10
50	10	4730-01-243-3538	97111	H4-62SL-T10
50	11	4720-01-233-1693	96906	MS52103A080230R
50	12	4730-01-116-5969	96906	MS51525A10-12S
50	13	5330-00-251-8839	96906	MS28778-12
50	14	4730-01-242-4573	97111	H6-63-T12
50	15	4730-01-242-4572	97111	H6-62SL-T12
50	16	4720-01-242-7755	96906	MS52103A100180R
50	17	4730-00-186-3845	98441	C503-10-8
50	18	5330-00-808-0784	96906	MS28778-8
50	19	5305-00-225-3843	96906	MS90728-8
50	20	5310-00-582-5965	02614	N405F4186
50	21	4730-00-196-1483	96906	MS51953-11
50	22	4820-00-420-5499	06853	285172
50	23	4730-00-278-4311	96906	MS51500A10
50	24	4730-01-024-0915	96906	MS51523A10
50	25	4720-01-179-2479	96906	MS52103A100380R
50	26	4730-00-542-5911	96906	MS5153281C
50	27	5340-01-178-2177	19207	12325777
50	28	5340-01-179-1046	19207	12325776
50	29	4730-00-623-3889	96906	MS51525A10
50	30	5340-01-179-1045	19207	12331987
50	31	4730-00-812-7999	96906	MS51504A6
50	32		97403	13204E2551
50	33	4820-00-289-3378	30076	43883
50	34		96906	MS52103A060540R
50	35	4730-00-995-1559	96906	MS51500A6
50	36	5340-01-178-2176	19207	12325763
50	37	4720-01-242-7756	96906	MS52103A101060R
50	38	4730-01-125-6381	96906	MS51528A10S
51	1	2910-00-798-4056	96906	MS51300-1
51	2	5305-00-068-0511	96906	MS90728-62
51	3	5310-00-080-6004	96906	MS27183-14
51	4	5340-01-171-0110	19207	12334923
51	5	5330-01-179-9494	19207	12332465
51	6	2910-01-170-9947	97403	13214E1997
51	7	5310-00-483-8790	96906	MS17829-6C
51	8	2590-01-178-5723	97403	13211E9533
51	9	5310-00-627-6128	96906	MS35335-35
51	10	5305-00-802-2764	96906	MS90728-55
51	11	2910-01-180-2991	97403	13214E2003
51	12	5305-00-978-9395	96906	MS16997-100
51	13	5340-01-171-0109	19207	12325860
51	14	5330-01-178-3361	19207	12325859
51	15	2910-01-222-8364	19207	12325858

CROSS-REFERENCE INDEXES

FIGURE AND ITEM NUMBER INDEX

FIG.	ITEM	STOCK NUMBER	CAGEC	PART NUMBER
51	16	2910-00-752-9138	96906	MS90908-1
51	17	5310-00-809-8546	96906	MS27183-8
51	18	5305-00-984-6212	96906	MS35206-265
51	19	2910-01-171-0070	19207	12325866
52	1	9320-01-176-8612	19207	12325817
52	2	9320-01-176-9178	19207	12325815
52	3	9320-01-176-8611	19207	12325812
52	4	9320-01-186-9781	19207	12325813
52	5	9320-01-176-9177	19207	12325814
52	6	9320-01-176-9179	19207	12325816
53	1	5305-00-068-0511	96906	MS90728-62
53	2	5310-00-080-6004	96906	MS27183-14
53	3	4930-00-477-8276	15434	256546
53	4		53964	A618021
53	5		53964	A619025
53	6		53964	SC220086
54	1	4730-01-223-0527	97403	13214E2935
54	2	5325-00-989-6286	96906	MS35489-113
54	3	4720-01-046-7516	96906	MS52103A080120R
54	4	4730-00-273-6686	81343	8-8 C70202CA(CAD)
54	5	4730-00-618-8126	96906	MS51504A8-12
54	6	4720-01-253-3404	96906	MS52103AC80060R
54	7	4730-01-074-0907	96906	MS51525A8-10
54	8	5330-00-285-9842	96906	MS28778-10
54	9	4730-01-243-3540	97111	H4-63-T10
54	10	4730-01-243-3538	97111	H4-62SL-T10
54	11	4720-01-253-3403	96906	MS52103AC80300R
54	12	4720-01-191-8334	96906	MS52103A080310R
54	13	4730-00-052-3420	96906	MS51508A8-8
54	14	4820-01-201-1070	19207	12335334
54	15	5306-01-210-2897	19207	12334991
54	16	4730-00-196-1490	96906	MS51953-56
54	17	4730-00-231-5623	88044	AN916-3
54	18	4730-00-761-8538	96906	MS51953-52
54	19	5310-00-823-8804	96906	MS27183-9
54	20	5310-00-483-8792	96906	MS17829-4C
54	21	5305-00-942-2196	96906	MS18154-60
54	22	5305-00-115-9526	96906	MS18154-58
54	23	5310-00-637-9541	96906	MS35338-46
54	24	5310-00-080-6004	96906	MS27183-14
54	25	5340-01-180-9858	19207	12334695
54	26	2540-01-192-7974	99688	602-3180
55	1		99688	54430
55	2	5310-01-189-8467	78553	C30584-3816
55	3	2930-01-194-0304	99688	10650
55	4	9320-01-192-5593	99688	54540
55	5	4140-00-792-8395	82877	23396-02
55	6	5305-01-081-5044	96906	MS51023-113
55	7		99688	54450
55	8	6105-01-192-6320	99688	20223

CROSS-REFERENCE INDEXES

FIGURE AND ITEM NUMBER INDEX

FIG.	ITEM	STOCK NUMBER	CAGEC	PART NUMBER
55	9		81263	2321
55	10	5915-01-201-2029	99688	85803
55	11	6150-01-234-1617	99688	70370
55	12	5310-01-194-6453	99688	51410
55	13	5310-01-132-5309	99688	60760
55	14	5340-01-192-7041	99688	61310
55	15	5915-01-201-2030	99688	85632
55	16	5340-01-244-5802	99688	54470
55	17	5340-01-197-1633	99688	95090
55	18	5306-00-455-0468	11083	1H3337
55	19		99688	54440
55	20	5320-01-193-9279	99688	61180
55	21	9905-01-192-2802	99688	51021
55	22	5310-00-903-8282	96906	MS21083N4
55	23	5310-01-193-9502	99688	50870
55	24	6150-01-199-2521	99688	65057
55	25		81349	M13486/1-5AR
55	26	9905-00-752-4649	81349	M43436/1-1
55	27	5935-00-572-9180	19207	8338566
55	28	5310-00-833-8567	19207	8338567
55	29	5999-00-057-2929	96906	MS27148-2
55	30	2590-01-196-1147	99688	65048
55	31	5325-00-582-3601	96906	MS35489-38
55	32	5340-01-194-5296	99688	82050
55	33	5975-01-064-5592	53421	T30R
56	1	2540-01-239-1662	19207	12357194
56	2		96906	AN960-616
56	3	5305-00-115-9526	96906	MS18154-58
56	4	4730-00-908-6293	96906	MS35842-15
56	5	2590-01-239-1663	19207	12357195
56	6		96906	MS521301A230054
56	7	4140-01-113-4668	19207	12292100
56	8	5935-01-115-0215	96906	MS3476W12-3S
56	9		19207	12293185-3
56	10	1005-01-118-8602	06090	202D921-4
56	11		19207	12295791-5AR
56	12		19207	12292100-1
56	13		96906	MS521301A230030
57	1	5340-01-193-7194	84256	55520
57	2	5305-01-195-1594	97403	13204E2945
57	3	5315-01-184-4842	97403	13204E2943
57	4	3120-01-184-4859	97403	13204E2944
57	5	3120-01-195-7988	97403	13204E2864
57	6	5310-00-595-7421	96906	MS17829-8C
57	7	5305-00-942-2196	96906	MS18154-60
57	8	5315-01-184-4785	97403	13214E2664
57	9	3830-01-184-4774	97403	13204E3925
57	10	5310-00-891-3426	96906	MS35691-73
57	11	5307-01-230-8845	19207	12355497
57	12	5310-00-809-8541	96906	MS27183-27
57	13	2510-01-220-6378	19207	12355496

CROSS-REFERENCE INDEXES

FIGURE AND ITEM NUMBER INDEX

FIG.	ITEM	STOCK NUMBER	CAGEC	PART NUMBER
57	14	5310-00-811-1377	96906	MS51922-72
57	15	2590-01-184-4778	97403	13214E2412
57	16	5310-00-637-9541	96906	MS35338-46
57	17	5305-00-068-0511	96906	MS90728-62
57	18	1670-01-048-7009	16007	353512-1
57	19	5340-00-678-6574	07878	65B3732
57	20	5306-01-229-9592	96906	MS90728-54L
57	21	5365-00-943-5353	81349	M27426-3176B
57	22	3120-00-808-2171	51588	B32L
57	23	4730-00-050-4208	96906	MS15003-1
57	24	5310-00-269-4040	96906	MS51922-49
57	25	5305-00-701-6980	96906	MS51975-57
57	26	2590-01-225-8386	19207	12355299
57	27	5340-01-182-9023	97403	13214E2360-3
57	28	3120-01-196-8055	97403	13204E2650-3
57	29	2590-01-185-0169	97403	13214E2482
57	30	5305-01-194-3001	97403	13211E8616
57	31	4030-01-182-8931	19207	12355445
57	32	2540-01-279-1013	19207	12357409
57	33	5305-00-925-7635	96906	MS90728-232
57	34	5310-00-584-7889	96906	MS35338-53
57	35	2590-01-182-8767	97403	13214E2483
57	36	5306-01-201-8790	19207	12335260
57	37	3830-01-184-4775	97403	13211E8614
57	38	5310-00-809-8533	96906	MS27183-23
57	39	5310-00-763-8922	96906	MS51967-24
57	40	3830-01-184-4977	97403	13211E8643
57	41	3830-01-184-4776	97403	13211E8613
57	42	2590-01-182-8769	97403	13214E2484
57	43	3120-01-264-6005	19207	12357158-1
57	44	5315-01-184-4868	97403	13204E2644
57	45	3830-01-184-4851	97403	13204E3917
57	46	2590-01-239-1664	19207	12357177
57	47	3120-01-194-9293	97403	13204E2650-2
57	48	5310-00-809-5998	96906	MS27183-18
57	49	5305-00-165-8074	96906	MS51095-420
57	50	3120-01-195-7990	97403	13204E2650-1
57	51	5315-01-184-4841	97403	13204E2652
57	52	3120-01-264-6006	19207	12357158-2
57	53	2590-01-182-8768	97403	13214E2481
57	54	5340-01-187-0904	97403	13214E2515
57	55	5305-00-052-2234	96906	MS24667-76
57	56	5340-01-273-8821	97403	13214E2403
57	57	5365-01-183-2770	19207	12325738
57	58	5306-01-112-8681	96906	MS90728-62L
57	59	5310-00-080-6004	96906	MS27183-14
57	60	5330-01-184-4904	97403	13214E2843
57	61	5330-01-184-4898	97403	13214E2690
57	62	5330-01-184-4899	97403	13214E2691
57	63	5330-01-184-4903	97403	13214E2696
57	64	5330-01-184-4901	97403	13214E2693

CROSS-REFERENCE INDEXES

FIGURE AND ITEM NUMBER INDEX

FIG.	ITEM	STOCK NUMBER	CAGEC	PART NUMBER
57	65	5305-00-958-5246	96906	MS35190-289
57	66	5305-00-959-2723	96906	MS35190-319
57	67	5330-01-184-4900	97403	13214E2692
57	68	5330-01-184-4902	97403	13214E2694
57	69	5330-01-183-2741	97403	13214E2737
57	70	5330-01-182-9005	97403	13214E2695
57	71		81348	WW-P-471ACAAAG
58	1		19207	12355304
58	2	5306-00-068-0514	96906	MS90727-7
58	3	5310-00-809-4058	96906	MS27183-10
58	4		19207	12335306
58	5	5310-00-595-7421	96906	MS17829-8C
58	6	5310-00-809-5998	96906	MS27183-18
58	7	2590-01-155-0107	97403	13204E2974
58	8	3110-01-179-7556	97403	13204E2972
58	9	5305-00-071-2077	96906	MS90728-121
58	10	4730-00-050-4208	96906	MS15003-1
58	11	5310-00-982-4988	96906	MS21045C4
58	12		19207	12362098
58	13	2590-01-155-0106	97403	13204E2973
58	14	3040-01-156-8106	97403	13214E2673
58	15	3805-01-183-2785	97403	13214E2379
58	16	5310-00-809-4061	96906	MS27183-15
58	17	5305-00-068-0511	96906	MS90728-62
58	18	2590-01-183-8368	97403	13214E2378
58	19	1670-01-048-7009	16007	353512-1
58	20	3040-01-254-6552	19207	12357282
58	21	5310-00-934-9738	96906	MS35649-222
58	22	5310-00-543-5060	96906	MS35338-39
58	23	5305-00-954-3938	96906	MS35206-207
58	24	5340-01-158-6585	81349	M24066/2-316
58	25	5340-00-678-6574	07878	65B3732
58	26	5305-00-115-9526	96906	MS18154-58
58	27	4030-00-946-8497	96906	MS87006-23
58	28	5305-00-855-0958	96906	MS24629-45
58	29	5340-01-216-5567	19207	12334724-1
58	30	5340-01-216-5652	19207	12335308
59	1	3805-01-156-6223	97403	13211E8644
59	2	5306-01-201-8790	19207	12335260
59	3	5310-00-809-8533	96906	MS27183-23
59	4	5310-00-763-8922	96906	MS51967-24
59	5	3805-01-164-0143	97403	13211E8646
59	6	3805-01-164-1975	97403	13211E8645
60	1	3040-01-182-1306	19207	12325843
60	2		96906	MS28775-342
60	3		96906	MS28782-45
60	4		19207	12335304-2
60	5		19207	12335305-3
60	6		19207	12335044-3
60	7		19207	12335303-3
60	8		96906	MS28775-121

CROSS-REFERENCE INDEXES

FIGURE AND ITEM NUMBER INDEX

FIG.	ITEM	STOCK NUMBER	CAGEC	PART NUMBER
60	9		19207	12335305-5
60	10		19207	12369135-3
60	11		06085	12369134-1
60	12	3120-00-684-5725	60380	15SF24
60	13	4730-00-050-4208	96906	MS15003-1
60	14	5305-00-940-9497	96906	MS51045-49
60	15	5310-00-809-5998	96906	MS27183-18
60	16	5305-00-071-2079	96906	MS90728-123
60	17	5365-00-664-5386	81349	M27426-31588
60	18	3120-00-684-5725	60380	15SF24
60	19	4730-00-050-4208	96906	MS15003-1
60	20	5315-01-180-8641	97403	13211E8634
60	21	5310-00-595-7421	96906	MS17829-8C
60	22	3120-01-183-2723	97403	13204E2472
60	23	5310-00-080-6004	96906	MS27183-14
60	24	5306-01-194-0589	96906	MS90728-75L
61	1	3040-01-187-0571	19207	12325844
61	2		96906	MS28775-342
61	3		96906	MS28782-45
61	4		19207	12335304-3
61	5		19207	12335305-4
61	6		19207	12335044-4
61	7		19207	12335303-4
61	8		96906	MS28775-224
61	9	3120-00-684-5725	60380	15SF24
61	10	4730-00-050-4208	96906	MS15003-1
61	11		19207	12335305-5
61	12		19207	12369135-3
61	13		06085	12369134-1
61	14	5305-00-940-9497	96906	MS51045-49
61	15	5315-01-180-8641	97403	13211E8634
61	16	5305-00-846-5703	96906	MS90728-70
61	17	2590-01-184-4783	97403	13211E8628
61	18	5310-00-585-3243	96906	MS9320-16
61	19	5306-01-197-2532	96906	MS90728-163L
61	20	5310-00-483-8790	96906	MS17829-6C
61	21	3120-01-183-2723	97403	13204E2472
61	22	5305-00-990-8632	96906	MS90728-73
62	1	5306-01-281-7155	96906	MS51095-420L
62	2	5310-00-809-5998	96906	MS27183-18
62	3	5306-01-201-0289	96906	MS51095-422L
62	4	5355-01-181-6415	72512	55M
62	5		19207	12379457
62	6	5360-01-257-9244	19207	12362060
62	7	3120-01-254-4442	81349	M81934/1-160032
62	8		19207	12362194
62	9	5315-00-013-7258	96906	MS24665-497
62	10	5310-00-584-5272	96906	MS35338-48
62	11	5310-00-184-8992	96906	MS9320-14
62	12	5305-00-071-2069	96906	MS90728-113
62	13	5315-00-990-2630	96906	MS20066-252

CROSS-REFERENCE INDEXES

FIGURE AND ITEM NUMBER INDEX

FIG.	ITEM	STOCK NUMBER	CAGEC	PART NUMBER
62	14	2540-01-274-1167	19207	12362195
62	15	2540-01-274-0998	19207	12362200
63	1	5305-00-068-0505	96906	MS90726-5
63	2	5310-00-582-5965	02614	N405F4186
63	3	5340-01-281-2918	19207	12362163
63	4	5360-01-274-1179	19207	12362188
63	5		19207	12362200-1
63	6	2510-01-275-9225	19207	12362157
63	7	5310-01-217-5206	81349	M12133/1-14P
63	8	2540-01-274-1103	19207	12362169
63	9	5315-00-616-5526	96906	MS35756-8
63	10	5310-01-015-3370	81349	M12133/1-11P
63	11	2540-01-274-1105	19207	12362170
63	12	5310-00-809-5998	96906	MS27183-18
63	13	5315-00-059-0491	96906	MS24665-372
63	14	5310-00-841-2041	96906	MS35692-33
63	15	5365-01-284-8136	19207	12362192-1
63	15	5365-01-284-8137	19207	12362192-2
63	16	5306-00-051-4081	96906	MS90727-39
63	17	5310-00-004-5034	96906	MS35338-50
63	18	5305-00-727-2283	96906	MS90727-162
63	19	5310-00-081-4219	96906	MS27183-12
63	20	5310-00-407-9566	96906	MS35338-45
63	21	2540-01-274-1104	19207	12362156
63	22	5315-01-307-5942	19207	12362155
63	23		81349	M81934/1-11-C-02-C
63	24	5365-01-282-3638	96906	MS16632-4068
63	25	2590-01-279-9942	19207	12362167
63	26	2590-01-246-0997	19207	12362059
63	27	2540-01-274-0996	19207	12362166
63	28	2540-01-274-1166	19207	12362171
63	29		96906	MS35338-46
63	30	5305-00-978-9394	96906	MS16997-99
63	31	5340-01-326-7775	19207	12379353
63	32	5305-00-068-0502	96906	MS90725-6
63	33	5315-00-819-6282	96906	MS16555-61
63	34	5340-01-326-8177	19207	12379369
63	35		19207	12379359
63	36	5310-00-732-0558	96906	MS51967-8
63	37	5315-00-957-9386	96906	MS20392-5C69
63	38	5310-00-080-6004	96906	MS27183-14
63	39	5315-00-815-1405	96906	MS24665-151
63	40	2510-01-274-1176	19207	12362172
63	41	3040-01-281-2915	19207	12362187
63	42		19207	12379362
63	43	5310-00-975-2075	96906	MS35691-21
63	44	5315-00-825-8350	96906	MS20392-5C39
63	45		19207	12379360
63	46	5315-00-234-1863	96906	MS24665-300
63	47	3040-01-326-7771	19207	12379346

CROSS-REFERENCE INDEXES

FIGURE AND ITEM NUMBER INDEX

FIG.	ITEM	STOCK NUMBER	CAGEC	PART NUMBER
63	48	5310-00-809-4058	96906	MS27183-10
63	49	5315-00-811-9107	96906	MS20392-3C45
63	50	5306-01-281-7154	96906	MS90727-114L
63	51	5310-00-184-8992	96906	MS9320-14
63	52	5305-01-204-5473	96906	MS90728-116L
63	53	5305-00-267-8956	96906	MS90727-12
63	54		19207	12379357
63	55		19207	12379342
63	56		19207	12379365
63	57	5306-01-253-4427	96906	MS90728-35L
63	58	2510-01-281-2871	19207	12362168
63	59	6650-00-973-1176	19207	10925306
63	60	5305-00-726-2555	96906	MS90727-168
63	61	5340-01-284-8141	19207	12362165-1
63	61	5340-01-284-8142	19207	12362165-2
63	61	5340-01-284-8143	19207	12362165-3
63	62	2510-01-274-0995	19207	12362189
63	63	2510-01-330-8087	19207	12379446
63	64		19207	12379451
63	65	5310-00-004-5033	96906	MS35338-46
63	66	5305-00-269-3246	96906	MS90726-70
63	67	4730-00-050-4203	96906	MS15001-1
63	68	5305-01-237-2133	96906	MS51966-151
63	69	5315-00-928-2336	96906	MS35675-41
63	70		19207	12379450
64	1	5306-01-122-5464	96906	MS16997-60L
64	2	5310-00-141-1795	88044	AN960-416
64	3	5340-01-216-5570	19207	12334959
64	4	2510-01-226-7378	19207	12334824
64	5	2540-01-217-3258	19207	12335070
64	6	5315-00-866-3952	96906	MS16562-56
64	7	3120-00-889-8567	96881	10L10F
64	8		19207	12334966
64	9	5315-01-237-4938	19207	12334951
64	10	5315-01-233-9848	19207	12334952
64	11	5310-00-080-6004	96906	MS27183-14
64	12	5365-01-241-5977	19207	12334958
64	13	5330-01-184-4882	97403	13214E2654
64	14	5315-00-005-0442	96906	MS24665-285
64	15	5340-01-217-3260	19207	12334960
64	16	5310-00-809-5998	96906	MS27183-18
64	17	5340-00-550-8070	96906	MS35812-6
64	18	5315-01-016-5658	96906	MS9468-23
64	19	5306-01-119-6763	96906	MS90728-64L
64	20	5340-01-217-3261	19207	12334962
64	21	5310-00-834-8734	96906	MS35691-37
64	22	5306-01-226-4578	19207	12334963
64	23	5306-01-217-3262	19207	12325769
64	24	5340-01-217-3259	19207	12335083
65	1	9515-01-184-4957	19207	12331837
65	2	5310-00-809-4058	96906	MS27183-10

CROSS-REFERENCE INDEXES

FIGURE AND ITEM NUMBER INDEX

FIG.	ITEM	STOCK NUMBER	CAGEC	PART NUMBER
65	3	5310-00-582-5965	02614	N405F4186
65	4	5305-00-988-1727	96906	MS35206-283
65	5	5310-00-225-6993	96906	MS51922-33
65	6	5310-00-809-5998	96906	MS27183-18
65	7	5305-00-071-2072	96906	MS90728-116
65	8	5305-00-071-2069	96906	MS90728-113
65	9	9515-01-254-6563	19207	12335422
65	10	5306-01-123-0891	96906	MS90728-113L
65	11		19207	12369153
65	12	5340-01-292-3026	19207	12362099
65	13	5305-01-210-0770	19207	12334999
65	14	5340-01-183-2779	19207	12332582
65	15	5306-01-194-4974	96906	MS90728-111L
65	16		19207	12369152
65	17	9515-01-254-6561	19207	12352559
65	18	9515-01-254-6562	19207	12352679
65	19	5310-00-080-6004	96906	MS27183-14
65	20	5306-01-112-7867	96906	MS51095-358L
65	21	2540-01-254-6573	19207	12357185-1
65	22		19207	12355368-3
65	23		19207	12325729
65	24	5305-00-938-1556	96906	MS90728-104
65	25	9515-01-184-4956	19207	12331836
65	26	2540-01-254-6571	19207	12357425
65	26	2540-01-298-8399	19207	12362073
65	27	9515-01-184-4955	19207	12325856
65	28	5305-01-126-2322	96906	MS24667-56
65	29	5340-01-228-5803	19207	12355529
65	30	5340-01-220-6379	19207	12355521
65	31	2540-01-293-3374	19207	12362100
65	32	5310-00-087-4652	96906	MS51922-17
65	33		19207	12335438
65	34	5305-00-068-0511	96906	MS90728-62
65	35	9515-01-184-4964	19207	12334811
65	36	9515-01-184-4970	19207	12334912
65	37	5305-00-068-0511	96906	MS90728-62
65	38	5310-00-805-6758	96906	MS9320-15
65	39	5305-00-071-2070	96906	MS90728-114
65	40	5365-01-209-7421	19207	12334842
65	41	5306-01-197-2531	96906	MS90728-112L
65	42	2540-01-254-5390	19207	12352512
65	43	2540-01-254-5389	19207	12352521-1
65	44		19207	12352521-2
65	45		19207	12355369-3
65	46	2540-01-254-5387	19207	12335428-1
65	47		19207	12355369-3
65	48		19207	12335428-2
65	49	9515-01-184-4961	19207	12334772
65	50	2540-01-254-5388	19207	12325759
65	51	2590-01-246-0909	19207	12357227
65	52	5315-00-954-1289	96906	MS20392-5C43

CROSS-REFERENCE INDEXES

FIGURE AND ITEM NUMBER INDEX

FIG.	ITEM	STOCK NUMBER	CAGEC	PART NUMBER
65	53	5315-00-939-0832	96906	MS9245-46
65	54	2510-01-254-6570	19207	12335442
65	55	5340-01-292-3241	19207	12362101
65	56	3040-01-246-0998	19207	12357364
65	57	5306-01-119-6763	96906	MS90728-64L
65	58	5340-01-292-3242	19207	12362102
66	1	5306-01-144-3080	96906	MS90728-67L
66	2	5310-00-080-6004	96906	MS27183-14
66	3	5310-00-087-4652	96906	MS51922-17
66	4	2510-01-256-0039	19207	12357183
66	5	5365-01-248-9632	19207	12335426
66	6	5305-00-269-3217	96906	MS90725-67
66	7	5306-01-112-8681	96906	MS90728-62L
66	8	2590-01-252-3374	19207	12335424
66	9	5340-01-246-0916	19207	12352522
66	10	5306-01-156-5437	96906	MS90728-65L
66	11	5340-01-246-0910	19207	12335430
66	12	5306-01-205-2799	96906	MS90728-61L
66	13	5340-01-248-9633	19207	12325803
66	14	5306-01-112-4339	96906	MS90728-2L
66	15	5340-01-183-2626	94222	A1-99-134-70
66	16	5306-01-253-4428	96906	MS90728-68L
66	17	5340-01-249-4377	19207	12335420
66	18	5310-00-891-3426	96906	MS35691-73
66	19	5310-00-809-8541	96906	MS27183-27
66	20	2510-01-220-6378	19207	12355496
66	21	5307-01-230-6845	19207	12355497
66	22	5310-00-811-1377	96906	MS51922-72
66	23	5306-01-114-0963	96906	MS90728-60L
66	24	5340-01-246-5830	19207	12357203
66	25	2510-01-183-6821	19207	12332092
66	26	5306-01-031-4845	96906	MS51095-360L
66	27	2590-01-215-6648	19207	12352503
66	28	4010-01-224-1529	19207	12332369
66	29	5306-01-194-0591	96906	MS90728-66L
66	30	5340-01-222-8733	19207	12352511
66	31	5306-01-186-5374	96906	MS90728-114L
66	32	2590-01-184-4784	97403	13211E9062
66	33	5670-01-219-5864	19207	12355311
66	34	5315-00-954-1289	96906	MS20392-5C43
66	35	5315-00-939-0832	96906	MS9245-46
66	36	5306-01-194-4974	96906	MS90728-111L
66	37	2510-01-252-9797	19207	12357366
66	38		19207	12355369-1
66	39	5310-00-809-5998	96906	MS27183-18
66	40	8140-01-217-1060	19207	12352487
66	41	2590-01-184-4781	19207	12325819
66	42	2510-01-252-0283	19207	12352545-1
66	43		19207	12352545-2
66	44		19207	12355369-4
66	45		19207	12332572

CROSS-REFERENCE INDEXES

FIGURE AND ITEM NUMBER INDEX

FIG.	ITEM	STOCK NUMBER	CAGEC	PART NUMBER
66	46	5306-01-197-2531	96906	MS90728-112L
66	47	5310-00-184-8974	96906	MS9320-12
66	48	5306-01-123-0891	96906	MS90728-113L
66	49	5340-01-183-2734	19207	12332562
66	50	5306-01-047-7815	96906	MS51095-361L
66	51	2540-01-292-9059	19207	12362092
66	52	9905-01-187-6453	19207	12325754
67	1	5306-01-031-4845	96906	MS51095-360L
67	2	5310-00-080-6004	96906	MS27183-14
67	3	9535-01-217-3221	19207	12355325
67	4		19207	12355324
67	5	5640-01-183-2729	19207	12334664
67	6	9535-01-292-3028	19207	12362094
67	7	9535-01-292-3027	19207	12362096
67	8	9535-01-292-3029	19207	12362095
68	1	5305-00-050-4212	96906	MS90725-186
68	2	2510-01-231-9144	19207	12355514-2
68	3	5306-01-112-4340	96906	MS90728-58L
68	4	2510-01-163-2703	97403	13211E8671
68	5	5305-00-068-0511	96906	MS90728-62
68	6		19207	12379433
68	7	2540-01-330-8832	19207	12367693
68	8	5340-01-231-9143	19207	12355514-1
68	9	2540-01-330-8831	19207	12367692
68	10	5310-00-987-1294	19200	10910174-16
68	11	2590-01-184-4786	97403	13211E8639
68	12	5310-00-809-5998	96906	MS27183-18
68	13	5305-00-990-6695	96906	MS90727-108
68	14		19207	12367729
68	15	5305-01-197-1368	96906	MS24667-52L
68	16	2590-01-184-4788	97403	13214E2603
68	17	2590-01-184-4789	97403	13214E2601
69	1	2540-01-279-1013	19207	12357409
69	2	5306-01-194-0588	96906	MS90728-232L
69	3	4030-01-182-8931	19207	12355445
69	4	5315-00-187-9591	46717	L6451-101
69	5	5310-00-771-4911	19207	7714911
69	6	5310-01-200-7005	97403	13214E2475
69	7	5306-01-287-2259	19207	12357408
70	1	2540-00-047-3926	19207	8710630
70	2	5310-00-771-4911	19207	7714911
70	3	5315-00-187-9591	46717	L6451-101
70	4		19207	8710626
70	5		19207	7714880
70	6		19207	7044253
70	7	5315-00-013-7214	96906	MS24665-359
70	8	5310-00-050-3520	19207	5005864
70	9		19207	8710627
70	10		19207	8710629
70	11	4730-00-050-4203	96906	MS15001-1
70	12		19207	8710628

CROSS-REFERENCE INDEXES

FIGURE AND ITEM NUMBER INDEX

FIG.	ITEM	STOCK NUMBER	CAGEC	PART NUMBER
70	13	5315-00-597-7399	96906	MS24665-631
70	14		81348	RRC271
70	15	5305-00-253-5626	96906	MS21318-47
70	16	5310-01-197-4491	97403	13211E8627
70	17	3120-01-183-8417	97403	13211E8648
70	18	5310-01-200-7005	97403	13214E2475
71	1	5340-01-189-9820	19207	12335327
71	2	5306-01-011-1706	96906	MS51095-306L
71	3	5310-00-809-4058	96906	MS27183-10
71	4	5330-01-183-2707	97403	13211E9386
71	5	5340-01-184-6407	97403	13211E9387
71	6	5305-01-176-0883	96906	MS24667-29L
71	7		97403	13204E2894-2
71	8	5340-01-183-8468	19207	12352550
71	9	2590-01-226-7376	19207	12335454
71	10		97403	13214E2325
71	11		97403	13204E2894-1
71	12	5340-01-183-8467	19207	12352551
71	13	2590-01-226-7374	19207	12352546-4
71	14		97403	13211E8625
71	15	5310-00-080-6004	96906	MS27183-14
71	16	5310-00-637-9541	96906	MS35338-46
71	17	5305-00-942-2196	96906	MS18154-60
71	18	5340-01-183-8466	19207	12352552
71	19	2590-01-226-7373	19207	12352546-3
71	20		97403	13211E8624
71	21	5340-01-183-8469	19207	12352549
71	22	2590-01-226-7377	19207	12352546-2
71	23		97403	13214E2326
71	24		97403	13204E2894-3
71	25	5340-01-183-2777	19207	12335460
71	26	2590-01-226-7375	19207	12352546-1
71	27		19207	12335256
71	28	5330-01-184-1920	19207	12335257
71	29	5340-01-183-2778	97403	13214E2760
71	30		19207	12335258
71	31	5330-01-183-2706	19207	12335259
71	32	4730-00-964-1782	81348	WW-P-471ACBBCN
71	33	5340-01-183-2776	19207	12332229
71	34	9330-01-183-2763	19207	12332228
71	35		19207	12332227
71	36	5306-01-031-4845	96906	MS51095-360L
71	37	5340-01-285-5586	96906	MS51831A109L
71	38	5340-01-285-7868	96906	MS51831A106L
71	39	5340-01-113-5615	81349	M45932/1-39L
71	40	5340-01-284-8285	96906	MS51830A108L
71	41	5340-01-132-4684	96906	MS51831A104L
71	42	5340-01-093-6225	96906	MS51831A203L
72	1	2590-01-183-6824	97403	13211E9245
72	2	5306-01-197-2532	96906	MS90728-163L
72	3	5310-00-823-8803	96906	MS27183-21

CROSS-REFERENCE INDEXES

FIGURE AND ITEM NUMBER INDEX

FIG.	ITEM	STOCK NUMBER	CAGEC	PART NUMBER
72	4	5330-00-745-7814	19207	10902609
72	5		19207	12367699
72	6	5310-00-080-6004	96906	MS27183-14
72	7	5306-01-114-0963	96906	MS90728-60L
73	1	4730-00-908-6294	96906	MS35842-16
73	2	4720-01-224-6713	96906	MS521301A231240
73	3	4320-01-167-8121	76122	24057
73	4	5310-00-367-1799	76122	21230
73	5	5310-01-089-0538	76122	21266
73	6	4730-01-190-2534	76122	22121
73	7	5330-01-205-9226	76122	22122
73	8	5307-00-206-4044	76122	21261
73	9	4320-01-191-4310	76122	22111
73	10	5307-01-073-5002	76122	21260
73	11	5310-00-050-9372	96906	MS21083C10
73	12	5310-01-207-7569	76122	22117
73	13	4320-01-192-3698	76122	22113
73	14	5365-01-193-2940	76122	22164
73	15	5330-01-205-9225	76122	22115
73	16	4320-01-191-4261	76122	22112
73	17	5305-00-253-5609	96906	MS21318-13
73	18	9905-01-189-5381	76122	22188
73	19	5315-01-193-7064	76122	22126
73	20	5306-01-123-0891	96906	MS90728-113L
73	21	4320-01-183-6818	97403	13211E8699
74	1	4320-01-193-3605	64294	HX365-3
74	2	5305-01-205-5361	64294	29531-16
74	3	2520-01-192-5680	64294	20198-3
74	4	5330-00-928-8914	64294	29771-138
74	5	5330-01-205-5886	64294	27486A
74	6	5365-00-215-5541	64294	29650-3
74	7	5365-00-215-5605	64294	29602-132
74	8	3110-01-205-8960	64294	30623
74	9	3040-01-192-1633	64294	SK4376
74	10	5315-00-616-5524	64294	29620-3
74	11	5305-01-080-6620	64294	29530-9
74	12	5310-00-495-7376	64294	29601-11
74	13	2520-01-192-5717	64294	16877-1
74	14	3110-00-183-6730	64294	30621
74	15		64294	20202-1
74	16	2520-01-192-8348	64294	30615-3
74	17	3020-00-221-6777	64294	20205
74	18	5365-01-204-6909	64294	30619
74	19	2520-01-192-5607	64294	16751-14
74	20	3110-00-183-6730	64294	30621
74	21	5310-01-080-6631	64294	29601-12
74	22	5306-01-080-5712	64294	29530-11
74	23	5305-00-155-5075	64294	29549-4
74	24	9905-01-193-9772	64294	41691
75	1	9905-01-109-8111	19207	12297759
75	2	9905-01-183-2688	97403	13214E2622

CROSS-REFERENCE INDEXES

FIGURE AND ITEM NUMBER INDEX

FIG.	ITEM	STOCK NUMBER	CAGEC	PART NUMBER
75	3	9905-01-183-2687	97403	13214E2452
75	4	5305-00-823-9139	96906	MS51850-44
75	5		19207	12357374
76	1	5305-00-068-0511	96906	MS90728-62
76	2	5305-00-446-9901	96906	MS51850-64
76	3	9905-01-201-6976	97403	13211E8997
76	4	3120-01-242-6253	81349	M81935/2-12K
76	5	5365-01-208-6855	97403	13211E9401
76	6	5305-00-940-8069	96906	MS90727-197
76	7	5305-00-253-5614	96906	MS21318-20
76	8	9905-01-201-0974	97403	13214E2208
76	9	9905-01-246-0925	19207	12357186
76	10	5340-01-179-9054	19207	12332238
76	11	5306-01-205-2800	96906	MS90728-189L
76	12	2510-01-228-5805	19207	12355460
76	13	2510-01-180-5558	19207	12355640
76	14	2815-01-179-9053	19207	12332553
76	15	3120-01-104-5989	73134	NRR12
76	16		19207	12332554
76	17	5310-00-080-6004	96906	MS27183-14
76	18	5306-01-112-8681	96906	MS90728-62L
76	19	2590-01-180-5556	97403	13211E9415
76	20	5305-00-914-3821	96906	MS51975-16
76	21		01226	BH58N
76	22	2590-01-225-8367	19207	12355576
76	23	5306-00-226-4832	96906	MS90728-39
76	24	5310-00-081-4219	96906	MS27183-12
76	25	2590-01-204-2588	97403	13214E2055
76	26	5340-01-201-0964	97403	13211E9079
76	27	5306-01-114-0963	96906	MS90728-60L
76	28	5310-00-245-3424	96906	MS17829-5C
76	29	5340-01-213-1353	97403	13214E2137
76	30	5306-00-226-4831	96906	MS90728-38
76	31	5315-00-468-1635	96906	MS35674-48
76	32	3040-01-179-9218	97403	13204E3691
76	33	3040-01-179-9217	97403	13204E3688
76	34	3040-01-186-8003	19207	12332331
76	35	3120-01-179-9151	19207	12331895-1
76	36		19207	12331886
76	37	5365-01-024-8998	96906	MS16626-1106
76	38	3040-01-179-9223	19207	12332239
76	39	3120-01-179-9151	19207	12331895-1
76	40		19207	12332235
76	41	3040-01-179-9211	19207	12325793
76	42	3040-01-186-8002	97403	13211E9411
76	43	5340-00-985-0823	96906	MS35812-4
76	44	5315-00-815-8840	96906	MS35810-4
76	45	5315-00-842-3044	96906	MS24665-283
76	46	5310-00-975-2075	96906	MS35691-21
76	47	5306-01-194-0002	19207	12335110
76	48	3040-01-179-9241	19207	12325791

CROSS-REFERENCE INDEXES

FIGURE AND ITEM NUMBER INDEX

FIG.	ITEM	STOCK NUMBER	CAGEC	PART NUMBER
76	49	2590-01-179-9052	97403	13204E3698
76	50	3040-01-179-9219	19207	12332233
76	51	3120-01-179-9151	19207	12331895-1
76	52		19207	12331884
76	53	5310-00-823-8803	96906	MS27183-21
76	54	5310-00-925-9642	96906	MS21083N10
76	55	5355-01-181-6415	72512	55M
76	56	5315-00-730-4453	96906	MS20066-100
76	57	5355-01-179-9116	72512	55M RED95
76	58	3040-01-179-9210	19207	12325792
76	59	3040-01-179-9222	19207	12332232
76	60	3120-01-179-9151	19207	12331895-1
76	61		19207	12331885
76	62	3040-01-186-8004	19207	12332097-3
76	63	3120-01-179-9151	19207	12331895-1
76	64		19207	12325799-3
76	65	3040-01-179-9221	19207	12332097-2
76	66	3120-01-179-9151	19207	12331895-1
76	67		19207	12325799-2
76	68	3040-01-179-9220	19207	12332097-1
76	69	3120-01-179-9151	19207	12331895-1
76	70		19207	12325799-1
76	71	5306-01-194-0004	19207	12335109-2
76	72	5310-00-853-9335	96906	MS35691-13
76	73	5340-01-212-0433	97403	13214E2272
76	74	5315-00-839-2325	96906	MS24665-132
76	75	5315-00-081-7875	96906	MS20392-3C25
76	76	5306-01-194-0003	19207	12335109-1
76	77	5306-01-194-7033	19207	12335109-3
77	1	4720-01-220-9889	19207	12352614
77	2	4310-00-640-3774	90005	569020-18
77	3	4730-01-238-6443	96906	MS51521A20
77	4	4730-01-069-8478	96906	MS51511A20
77	5	4730-01-225-6873	19207	12355293-1
77	6	4730-01-221-7329	19207	12355293-2
77	7	4720-01-220-6650	19207	12355287-3
77	8	4820-01-120-4532	91816	P59-500
77	9	4730-00-995-1559	96906	MS51500B6
77	10	4720-01-192-9639	97403	13214E2797
77	11		19207	12357414
77	12		97403	13214E2551
77	13	4730-01-088-9643	97403	13211E9016-5
77	14	5330-00-251-8839	96906	MS28778-12
77	15	4720-01-181-6461	97403	13214E2457-2
77	16	4720-01-242-7752	19207	12357135
77	17	4730-01-066-1282	96906	MS51525A20
77	18	5330-00-816-3546	96906	MS28778-20
77	19	4730-00-812-7999	96906	MS51504A6
77	20	5330-00-804-5695	96906	MS28778-6
77	21	4730-00-491-9576	96906	MS51525A6
77	22	5330-00-808-0794	96906	MS28778-8

CROSS-REFERENCE INDEXES

FIGURE AND ITEM NUMBER INDEX

FIG.	ITEM	STOCK NUMBER	CAGEC	PART NUMBER
77	23	4730-01-156-4835	46717	AC-1-310
77	24	4720-01-289-8233	19207	12357145
77	25	4720-01-289-8232	19207	12357141
77	26	4720-01-182-4249	97403	13214E2473-1
77	27	5975-00-451-5001	96906	MS3367-3-9
77	28	4730-00-623-3889	96906	MS51525A10
77	29	5330-00-285-9842	96906	MS28778-10
77	30	4720-01-182-9013	97403	13214E2457-5
77	31	4720-01-179-1323	98441	A1269-1
77	32	5310-00-483-8790	96906	MS17829-6C
77	33	5310-00-184-8974	96906	MS9320-12
77	34	5340-01-195-5913	97403	13214E2832
77	35	5340-01-197-0926	97403	13214E2833
77	36	5305-00-782-9489	96906	MS90728-66
77	37	4820-00-045-7415	96906	MS24593-8
77	38	4730-00-822-5609	96906	MS51527A8
77	39	4720-01-179-9191	98441	A1268-1
77	40	4730-01-103-8362	96906	MS51522A8S
77	41	4730-00-019-1489	96906	MS51527A20
77	42	4730-00-495-3409	97403	13211E9018-8
77	43	4730-00-225-0699	97403	13211E9018-12
77	44	4730-01-192-4417	96906	MS24397-21
77	45	5340-01-197-7597	19207	7529133-7
77	46	5330-00-819-5111	96906	MS28778-24
77	47	4730-01-050-1599	96906	MS51527A24
77	48	4720-01-221-2068	19207	12352622
77	49	5310-01-141-2512	96906	MS51860-12
77	50	4730-01-194-5134	96906	MS51509A24
77	51	4730-01-207-9552	96906	MS51512A20
77	52	5306-01-205-2799	96906	MS90728-61L
77	53		96906	7397787
77	54	5340-01-197-7597	19207	7529133-7
77	55	5310-00-732-0558	96906	MS51967-8
77	56	4720-01-181-6462	97403	13214E2457-3
77	57	5306-01-112-8681	96906	MS90728-62L
77	58	5310-00-080-6004	96906	MS27183-14
77	59	4730-00-755-7609	81349	M52525/16-16
77	60	5330-00-579-7925	96906	MS28775-219
77	61	4730-01-124-3728	96906	MS51528A8S
77	62	4730-01-179-4110	97403	13204E2549
77	63	5305-00-782-9489	96906	MS90728-66
77	64	5310-00-637-9541	96906	MS35338-46
77	65	5310-00-080-6004	96906	MS27183-14
77	66		19207	12335002
77	67		19207	12335004
77	68	5306-01-114-0963	96906	MS90728-60L
77	69	5306-01-119-6763	96906	MS90728-64L
77	70	5340-01-196-0641	97403	13214E1987
77	71	4720-01-242-7752	96906	MS52103A060380R
77	72	5310-00-809-4058	96906	MS27183-10
77	73	5305-00-225-3843	96906	MS90728-8

CROSS-REFERENCE INDEXES

FIGURE AND ITEM NUMBER INDEX

FIG.	ITEM	STOCK NUMBER	CAGEC	PART NUMBER
77	74		98441	MS515328B
77	75		19207	12357421
77	76	5340-00-809-1494	96906	MS21333-105
77	77	5310-00-483-8792	96906	MS17829-4C
77	78	4730-01-196-4218	97403	13211E8916-7
77	79	4720-01-182-9012	97403	13214E2457-4
77	80	4730-00-812-2434	96906	MS51521A8
77	81	4730-01-194-0144	97403	13211E9563
77	82	5330-00-804-5694	96906	MS28778-16
77	83	4730-00-930-5392	96906	MS51525A16
77	84	4720-01-289-8230	19207	12357137
77	85	5330-00-285-9847	96906	MS28778-32
77	86	5365-01-198-6557	96906	MS51840-33
77	87	5306-01-206-5451	96906	MS90728-41L
77	88	5310-00-081-4219	96906	MS27183-12
77	89	5340-01-195-3387	97403	13214E2411
77	90	5340-01-180-8599	97403	13214E2400
77	91	4730-00-540-1197	96906	MS51500A8-12
77	92	4720-01-289-8228	19207	12355583
77	93	4730-00-618-8126	96906	MS51504A8-12
77	94	4720-01-179-9190	97403	13214E2478-1
77	95	5330-00-833-7491	96906	MS28778-5
77	96	4730-00-574-6579	96906	MS51527A5
77	97	4720-01-289-8231	19207	12357139
77	98	4730-00-431-9307	96906	MS51525A5
77	99	4720-01-180-5629	97403	13214E2472
77	100	4720-01-292-6540	01276	FB9986-01
77	101	4720-01-292-6541	01276	FB9986-02
77	102	4730-00-679-9766	96906	MS51528A6
77	103	4720-01-195-3842	97403	13214E2501-3
77	104	4730-00-883-0643	96906	MS51507A6
77	105	4730-01-180-8608	97403	13214E2715
77	106	5330-01-200-3967	97403	13214E2716
77	107	4730-00-375-6403	96906	MS51860-55
77	108	4730-00-618-5372	96906	MS51521A6
77	109	5330-00-805-2966	96906	MS28778-4
77	110	4730-01-007-5232	96906	MS51525A4
77	111	4720-01-195-3838	97403	13214E2495-2
77	112	4720-01-181-6166	98441	A1270-1
77	113	4720-01-195-3841	97403	13214E2501-1
77	114	4720-01-181-6167	97403	13214E2486
77	115	4730-01-192-9593	96906	MS51528A12
77	116	4720-01-289-8229	19207	12357134
77	117	4730-00-143-3941	96906	MS51527A6
77	118	4730-00-585-2309	96906	MS51527A4
77	119	4720-01-195-3840	97403	13214E2495-5
77	120	4720-01-195-3844	97403	13214E2501-5
77	121	4730-01-049-8462	96906	MS51521A4
77	122	4730-00-466-7467	96906	MS51860-53
77	123	4730-00-118-8546	96906	MS51507A4
77	124	5340-01-186-6018	97403	13214E2714-2

CROSS-REFERENCE INDEXES

FIGURE AND ITEM NUMBER INDEX

FIG.	ITEM	STOCK NUMBER	CAGEC	PART NUMBER
77	125	5340-01-186-8017	97403	13214E2714-1
77	126	5306-01-194-0589	96906	MS90728-75L
77	127	4720-01-195-8497	97403	13214E2495-4
77	128	4730-00-163-0237	96906	MS51528A4
77	129	4730-01-194-1983	97403	13214E2497-1
77	130	4720-01-289-8213	97403	13214E2500-2
77	131	5365-00-674-6831	96906	MS51840-26
77	132	5365-00-549-6688	96906	MS51840-23
77	133	5306-01-194-0590	96906	MS90728-55L
77	134	5340-00-053-8994	96906	MS21333-126
77	135	5340-00-833-3049	96906	MS21333-127
77	136	4720-01-289-8226	19207	12355579
77	137	4720-01-195-3837	97403	13214E1983
77	138	4820-00-853-6864	96906	MS24593-4
77	139	4730-01-194-0147	97403	13214E2497-2
77	140	4720-01-192-9637	97403	13214E2495-1
77	141	4730-00-710-5571	96906	MS51525A12
77	142	4730-00-786-2247	96906	MS51534A8-6
77	143	4730-00-762-1239	96906	MS5153188
77	144	4720-01-299-8899	98441	A1271-2
77	145	4720-01-249-2026	97403	13214E2457-9
77	146	4720-01-195-9125	97403	13214E2501-2
77	147	4730-00-855-4799	96906	MS51519B10S
77	148	4720-01-195-3843	97403	13214E2501-4
77	149	4720-01-289-8227	19207	12355580
78	1	5330-00-808-0794	96906	MS28778-8
78	2	4730-00-822-5609	96906	MS51527A8
78	3	4710-01-189-9803	19207	12334705
78	3	4710-01-316-7426	19207	12369156
78	4	5310-00-269-6717	96906	MS51860-56
78	5	5340-01-180-8609	97403	13211E9388
78	6	5310-00-809-4058	96906	MS27183-10
78	7	5306-01-112-4341	96906	MS90728-5L
78	8	4730-00-274-4601	96906	MS51507A8
78	9	4710-01-192-8523	97403	13211E8881
78	10	5340-01-181-6138	97403	13214E1972
78	11	5310-00-167-0721	96906	MS35333-41
78	12	5305-00-914-3819	96906	MS51975-10
78	13	4730-00-950-6134	96906	MS21920-41
78	14	5330-00-285-9842	96906	MS28778-10
78	15	4730-00-974-7313	96906	MS51527A10
78	16	4710-01-192-8519	97403	13204E3768
78	17	4710-01-189-9805	19207	12334822
78	17	4710-01-316-4922	19207	12369155
78	18	4710-01-189-9804	19207	12334821
78	18	4710-01-316-4923	19207	12369154
78	19	4710-01-179-7633	19207	12325766
78	20	4730-00-834-4519	96906	MS51505A8
78	21	4710-01-192-9821	97403	13211E8929
78	22	4710-01-192-9820	97403	13211E8928
78	23	4730-01-150-0877	96906	MS51528A24

CROSS-REFERENCE INDEXES

FIGURE AND ITEM NUMBER INDEX

FIG.	ITEM	STOCK NUMBER	CAGEC	PART NUMBER
78	24	5330-00-819-5111	96906	MS28778-24
78	25	4710-01-192-8524	97403	13211E8882
78	26	5340-01-181-6135	97403	13214E2285
78	27	5306-01-119-9321	96906	MS90728-8L
78	28	5340-01-181-6136	97403	13214E1970
78	29	4730-00-067-7564	96906	MS51519A8S
78	30	4710-01-192-8522	97403	13211E8880
78	31	4710-01-192-9818	97403	13211E8883
78	32	5306-01-205-9150	96906	MS90728-13L
78	33	5340-01-180-5561	97403	13214E2554
78	34	5340-01-180-5560	97403	13214E2553
78	35	5310-00-809-4061	96906	MS27183-15
78	36	5306-01-119-6763	96906	MS90728-64L
78	37	5330-00-804-5695	96906	MS28778-6
78	38	4730-00-491-9576	96906	MS51525A6
78	39	4730-01-156-4835	46717	AC-1-310
78	40	5340-01-180-5562	97403	13214E1984
78	41	4710-01-179-7618	97403	13214E2750
78	42	4710-01-179-7622	97403	13214E2754
78	43	4710-01-179-7620	97403	13214E2752
78	44	4730-00-623-3889	96906	MS51525A10
78	45	4730-01-193-7688	97403	13214E2416-3
78	46	4710-01-219-7917	19207	12332101
78	47	4730-00-226-6902	96906	MS51530A8S
78	48	5365-00-674-6831	96906	MS51840-26
78	49	4710-01-179-7632	97403	13214E2842
78	50	4730-00-074-0713	96906	MS51523A8
78	51	4710-01-192-8521	97403	13211E8879
78	52	4710-01-192-9816	97403	13211E8877
78	53	4710-01-192-9817	97403	13211E8878
78	54	4710-01-192-9815	97403	13211E8876
78	55	4710-01-192-8520	97403	13211E8875
78	56	4710-01-179-7621	97403	13214E2753
78	57	4710-01-179-7619	97403	13214E2751
78	58	5340-01-181-6137	97403	13214E1971
78	59	5306-01-203-6433	96906	MS90728-11L
78	60	4710-01-179-7623	97403	13214E2755
78	61	4730-00-679-9766	96906	MS51528A6
78	62	4710-01-192-8527	97403	13214E1982
78	63	4710-01-192-8525	97403	13214E1978
78	64	5340-01-181-6133	97403	13214E1968
78	65	5305-00-949-6185	96906	MS51975-9
78	66	4730-00-375-6403	96906	MS51860-55
78	67	4730-00-242-3147	96906	MS51516A6
78	68	4710-01-189-9808	19207	12334703
78	69	5340-01-181-6134	97403	13214E1969
78	70	4710-01-194-0333	97403	13214E1979
78	71	4730-00-143-3941	96906	MS51527A6
78	72	4710-01-189-9809	97403	13214E2816
78	73	4730-01-194-1984	97403	13214E2497-3
78	74	4710-01-186-8000	97403	13214E1975

CROSS-REFERENCE INDEXES

FIGURE AND ITEM NUMBER INDEX

FIG.	ITEM	STOCK NUMBER	CAGEC	PART NUMBER
78	75	4710-01-189-9806	19207	12331985
78	76	4710-01-192-8528	97403	13214E2739
78	77	4710-01-189-9812	19207	12334704
78	78	4730-01-124-3728	96906	MS51528A89
78	79	5340-01-181-6139	97403	13214E1973
78	80	5340-01-180-9563	97403	13214E1989
78	81	4710-01-189-9814	19207	12334694
78	82	4710-01-179-7627	97403	13214E2820
78	83	4710-01-189-9810	19207	12334702
78	84	4730-01-193-7689	97403	13214E2416-5
78	85	4730-01-194-1985	97403	13214E2497-4
78	86	4820-01-182-4215	97403	13214E2802
78	87	4730-01-179-7576	97403	13214E2824
78	88	4730-00-186-3845	98441	0503-10-8
78	89	4730-01-194-0148	97403	13211E8914-5
78	90	4710-01-192-9822	97403	13214E1977
78	91	4710-01-189-9807	97403	13214E1980
78	92	4710-01-200-9191	97403	13214E1976-1
78	93	4730-01-194-1983	97403	13214E2497-1
78	94	4710-01-179-7624	97403	13214E2814
78	95	4710-01-189-9813	97403	13214E2823
78	96	4710-01-189-9811	97403	13214E2822
78	97	4710-01-192-8526	97403	13214E1981
79	1	4820-01-194-0196	97403	13214E1974
79	2	5310-00-080-6004	96906	MS27183-14
79	3	5306-01-194-0591	96906	MS90728-66L
79	4	4820-01-158-4066	82296	1A32F8T60S22
79	5	5306-01-196-0442	96906	MS90728-110L
79	6	5310-00-809-5998	96906	MS27183-18
79	7	5310-00-151-9572	88044	AN960XC816
79	8	5340-01-181-6159	97403	13214E2728
79	9	4730-01-180-8600	97403	13214E2765
79	10	5340-01-195-5914	97403	13214E2764
79	11	4730-01-180-8605	97403	13214E2736-1
79	12	4730-01-180-8606	97403	13214E2736-2
79	13	5340-01-195-5915	97403	13214E2763
79	14	4730-01-180-8607	97403	13214E2766
79	15	5340-01-182-8987	97403	13214E2717
80	1	5310-00-483-8790	96906	MS17829-6C
80	2	5310-00-080-6004	96906	MS27183-14
80	3	5306-01-238-1479	97403	13214E2709
80	4	2590-01-170-5026	84561	A6R0578B53Q
80	5		84561	6760930000
80	6	9905-01-206-3994	64575	5423520001
80	7		84561	6760950000
80	8		84561	0118860546
80	9		84561	6560910000
80	10		84561	5621970000
80	11		84561	6560930000
80	12		84561	6561010000
80	13	5330-00-805-2966	96906	MS28778-4

CROSS-REFERENCE INDEXES

FIGURE AND ITEM NUMBER INDEX

FIG.	ITEM	STOCK NUMBER	CAGEC	PART NUMBER
80	14	5365-00-805-1403	96906	MS24391-4
80	15	5310-00-809-5998	96906	MS27183-18
80	16	5306-01-210-9420	96906	MS90727-109L
80	17	5340-01-216-5571	19207	12352613
80	18	5305-00-725-2317	96906	MS90728-64
81	1	8120-01-255-7885	57517	JCC1888
81	2	5340-01-278-7961	57517	1888-03
81	3	5310-00-637-9541	96906	MS35338-46
81	4	5305-00-632-2777	96906	MS35307-358
81	5		57517	1888-02
81	6	5330-00-618-0799	96906	MS28775-018
81	7	5330-00-627-5485	02697	8-018N300-90
81	8	5310-01-278-7963	57517	1888-08
81	9	5310-01-278-7964	57517	1888-09
81	10	5330-00-618-5361	96906	MS28775-015
81	11	2590-01-278-7962	57517	1888-04
81	12	1650-00-222-4525	96906	MS20813-1
81	13	4820-00-535-6483	96906	MS28889-2
81	14		57517	1888-01
81	15	5330-00-833-7491	96906	MS28778-5
81	16	5310-00-684-2731	96906	MS28777-5
81	17		57517	1888-07
81	18	6685-01-268-6735	57517	1888-05
82	1	2815-01-180-5564	97403	13214E2658
82	2	5310-00-809-4058	96906	MS27183-10
82	2	5310-00-809-4058	96906	MS27183-10
82	3	4330-01-234-1939	05228	7513385
82	4	5305-00-175-3230	96906	MS21318-14
82	5	9905-01-182-1762	05228	7551681
82	6		00624	SC0010-32C-AB
82	7		05228	7551849
82	8		05228	7551702
82	9		05228	7502409
82	10		05228	7551850
82	11	4730-01-188-8134	05228	7502407
82	12		96906	MS28775-228
82	13		96906	MS28774-228
82	14		96906	MS28775-214
82	15		05228	7513130
82	16		05228	7502410
82	17	5306-01-282-1519	96906	MS90728-17L
82	18	5306-01-114-0963	96906	MS90728-60L
82	19	5310-00-080-6004	96906	MS27183-14
82	20	5310-00-483-8792	96906	MS17829-4C
83	1	2815-01-179-9055	05228	9326079
83	2	5306-01-194-0591	96906	MS90728-66L
83	3	5340-00-915-8173	64829	6654655
83	4	4820-00-424-7431	81321	15002
83	5	5365-00-202-8946	05228	9326688
83	6		11083	1H4253
83	7		05228	60260

CROSS-REFERENCE INDEXES

FIGURE AND ITEM NUMBER INDEX

FIG.	ITEM	STOCK NUMBER	CAGEC	PART NUMBER
83	8		05228	6653463
83	9	4820-01-187-6815	05228	9326077
83	10	2910-00-462-4877	81321	60263
83	11		05228	30102
83	12		05228	7516310
83	13		05228	9314824
83	14	5340-01-133-4724	81321	7886
83	15	5340-01-133-4723	81321	22202
83	16	5310-00-483-8790	96906	MS17829-6C
83	17	5305-00-269-3246	96906	MS90727-70
83	18	5310-00-483-8790	96906	MS17829-6C
83	19	5310-00-080-6004	96906	MS27183-14
83	20	5305-00-725-2317	96906	MS90728-64
84	1	2590-01-181-6164	97403	13211E8800
84	2	5330-01-176-7535	81349	M83461/1-342
84	3	6680-01-184-9213	19207	12325719
84	4	5330-00-808-0794	96906	MS28778-8
84	5	2930-01-181-6177	97403	13214E2734
84	6	4730-01-176-2947	92863	M3424,REV 3.
84	7	5330-00-818-4591	96906	MS28775-136
84	8	2590-01-180-8602	97403	13214E2735
84	9	5330-01-197-2592	97403	13214E2733
84	10		97403	13211E8801
84	11	4730-01-281-9381	96906	MS49006-11
84	12	5330-00-579-7927	96906	MS28775-225
84	13	4820-01-201-7978	76040	850435
84	14	5310-01-180-8601	97403	13204E3629
84	15	4710-01-204-8143	97403	13214E2790
84	16	4730-01-066-1282	96906	MS51525A20
84	17	5330-00-816-3546	96906	MS28778-20
84	18	5330-01-192-9336	97403	13214E2789
84	19	3040-01-201-0952	19207	12335099
84	20	5310-00-080-6004	96906	MS27183-14
84	21	5306-01-205-2798	96906	MS90728-63L
84	22	5306-01-118-3133	96906	MS90728-10L
84	23	5310-00-809-4058	96906	MS27183-10
84	24	5315-00-842-3044	96906	MS24665-283
84	25	5315-00-904-1643	96906	MS20392-7C75
84	26	5310-00-595-7421	96906	MS17829-8C
84	27	5310-00-809-5998	96906	MS27183-18
84	28	5340-01-194-5302	97403	13211E8910
84	29	9320-01-183-1731	74687	7301857
85	1	4320-01-132-0609	62983	PV810RSY31C11
85	2	4935-01-029-3391	62983	360430
85	3	5330-00-441-3105	62983	173792
85	4	5805-01-026-1442	62983	942158
85	5	5330-00-867-1747	62983	244956
85	6	5305-00-153-8694	62983	1276
85	7	9905-01-192-5549	62983	404751
85	8	5305-01-102-9565	62983	227407
85	9	5330-00-505-2419	62983	317162

copy available

CROSS-REFERENCE INDEXES

FIGURE AND ITEM NUMBER INDEX

FIG.	ITEM	STOCK NUMBER	CAGEC	PART NUMBER
85	10	5330-00-869-4202	62983	166360
85	11	5365-00-868-9569	62983	119982
85	12	5365-00-869-3192	62983	120428
85	13	5340-01-193-1744	97403	13204E2558
85	14	5306-01-197-2531	96906	MS90728-112L
85	15	5310-00-809-5998	96906	MS27183-18
85	16	3110-00-100-2368	52676	6206FS
85	17	5330-01-189-9781	97403	13214E2781
85	18	2590-01-180-5559	97403	13214E2782
85	19	5315-01-194-9347	97403	13214E2780
86	1	5330-01-197-2591	97403	13214E2662
86	2	5310-01-064-3621	81352	AN960XC1216
86	3	5305-01-200-6258	96906	MS16997-190L
86	4	4320-01-167-8099	05842	PF4033-2738
86	5		05842	H426.394
86	6		05842	H425.394
86	7	4320-01-176-9441	05842	1163.277
86	8	5305-01-202-8233	05842	1001.003
86	9	9905-01-185-2642	05842	1006.026
86	10	3110-00-227-3245	05842	H431.520
86	11	3120-01-185-8594	05842	1027.155
86	12		05842	11391010
86	13	4320-01-176-9434	05842	1115.288
86	14		05842	1013.325
86	15	5365-01-191-2994	05842	1081.049
86	16	3120-01-210-0867	05842	1042.155
86	17	3110-01-186-7464	05842	1034.155
86	18	4320-01-189-1771	05842	2087.900
86	19	5360-01-185-8525	05842	1068.110
86	20	3110-00-100-6155	05842	1011.016
86	21	5360-01-186-7496	05842	H613.183
86	22	2530-01-208-7034	05842	1263.006
86	23		05842	1906.503
86	24	5340-01-209-7084	05842	1017.290
86	25	5310-01-206-6636	05842	1137.006
86	26	4320-01-189-1770	05842	1013.016
86	27	5360-01-185-8524	05842	1033.110
86	28		05842	1313.503
86	29	2530-01-208-7033	05842	1261.006
86	30	4820-01-207-9221	05842	1033.290
86	31	5365-01-207-1291	05842	1082.049
86	32		05842	1115.562
86	33		05842	1096.503
86	34	3120-01-208-5400	05842	1058.232
86	35		05842	1113.562
86	36		05842	1094.503
86	37		05842	1090.503
86	38	5305-01-191-3022	05842	1325.028
86	39	5365-01-194-8937	05842	1008.006
86	40		05842	1908.503
86	41	5340-01-180-8673	05842	1134.098

CROSS-REFERENCE INDEXES

FIGURE AND ITEM NUMBER INDEX

FIG.	ITEM	STOCK NUMBER	CAGEC	PART NUMBER
86	42	5305-01-185-8466	05842	1096.028
86	43		05842	1140.050
86	44		05842	1904.503
86	45	5365-01-191-8015	05842	1268.006
86	46		05842	1125.503
86	47	3120-01-208-5399	05842	1056.232
86	48	3110-01-210-0847	05842	1041.155
87	1	2590-01-179-7527	97403	13211E9561
87	2	5310-00-809-5998	96906	MS27183-18
87	3	5306-01-196-0442	96906	MS90728-110L
87	4	5310-00-483-8790	96906	MS17829-6C
87	5	5310-00-080-6004	96906	MS27183-14
87	6	2590-01-179-7528	97403	13211E9562
87	7	5305-00-725-2317	96906	MS90728-64
88	1	4730-00-812-2434	96906	MS51521A8
88	2	4730-01-194-0144	97403	13211E9563
88	3	5330-00-808-0794	96906	MS28778-8
88	4	4730-00-822-5609	96906	MS51527A8
88	5	4730-01-156-4835	46717	AC-1-310
88	6	4720-01-182-9014	97403	13214E2457-6
88	7	4720-01-182-9015	97403	13214E2457-7
88	8	4730-00-451-7958	96906	MS51516A8
88	9	5310-00-269-6717	96906	MS51860-56
88	10	4720-01-249-2026	97403	13214E2457-9
88	11	4720-01-249-1383	97403	13214E2457-10
88	12	4730-01-042-0228	96906	MS51524A8
88	13	4720-01-249-2025	97403	13214E2457-14
88	14	4710-01-179-9199	97403	13211E9565
88	15	4710-01-179-7634	97403	13211E9564
88	16	4730-00-974-7313	96906	MS51527A10
88	17	4720-01-200-0815	19207	12335241
88	18	4710-01-179-9200	97403	13211E9566
88	19	4730-01-103-8362	96906	MS51522A8S
88	20	4730-01-179-7578	97403	13211E8914-2
88	21	4730-01-139-1585	96906	MS51521A10
88	22	4730-01-192-9590	96906	MS51526A10
88	23	5330-00-285-9842	96906	MS28778-10
89	1	4810-01-313-6320	81833	8511-050002
89	2	5310-01-031-1458	96906	MS51967-36
89	3	5310-01-193-4522	81833	8904-000364
89	4	4820-01-189-6274	81833	8910-000070
89	5		81833	C100-228650
89	6	4810-01-314-6238	81833	8910-000240
89	7	4820-01-189-2145	81833	8910-000050
89	8	4820-01-189-1774	81833	8910-000030
89	9	5365-01-191-8207	81833	8904-000014
89	10	5306-01-195-1553	81833	8904-000344
89	11	5310-00-413-3040	96906	MS51968-30
89	12	5310-01-193-4521	81833	8904-000354
89	13	5306-01-191-8155	81833	8904-000334
89	14	4810-01-190-0967	81833	8910-000060

CROSS-REFERENCE INDEXES

FIGURE AND ITEM NUMBER INDEX

FIG.	ITEM	STOCK NUMBER	CAGEC	PART NUMBER
89	15	4820-01-191-4370	81833	8910-000020
89	16	4820-01-190-0070	81833	8904-000024
89	17	4820-01-189-1773	81833	8910-000040
90	1	4820-01-155-0138	81833	8211-040001
91	1	5310-00-087-4652	96906	MS51922-17
91	2	5310-00-080-6004	96906	MS27183-14
91	3	3120-01-144-3857	81349	M81935/1-08
91	4	5310-00-297-8901	43999	1N7-8A
91	5	5310-00-809-5998	96906	MS27183-18
91	6	5305-01-221-8699	96906	MS21301-35
91	7	5340-01-187-0994	19207	12332028-2
91	8	2530-01-187-0993	19207	12332028-1
91	9	5306-01-197-1599	96906	MS90728-86L
91	10	5310-00-809-4085	96906	MS27183-16
91	11	2510-01-193-7179	19207	12335107
91	12	5340-00-758-0181	76005	J6198-3
91	13	5310-00-768-0318	96906	MS51967-14
91	14	5310-00-167-0770	88044	AN970-8
91	15	5310-00-184-8992	96906	MS9320-14
91	16	3120-01-182-8955	76005	J-3830-6
91	17	5306-01-196-0444	96906	MS90728-122L
91	18	3120-01-140-9939	81349	M81935/1-08L
91	19	5310-00-167-1303	88044	AN316-8L
91	20	5340-01-279-0983	19207	12362070
91	21	5306-01-196-6741	96906	MS90728-193L
91	22	5310-01-197-2398	97403	13204E3555
91	23	5365-01-183-2749	97403	13214E2671
91	24	2510-01-184-4826	97403	13214E2669
91	25	5306-01-195-1579	96906	MS90728-187L
91	26	5310-00-809-8533	96906	MS27183-23
91	27	2520-01-183-8347	97403	13214E2186
91	28	2990-01-279-1014	19207	12357242
91	29	5340-01-303-1073	96906	MS51830A108
91	30	5340-00-805-0339	96906	MS51831-204
91	31	5306-00-818-5330	80205	NAS632-18
91	32	2815-01-225-8385	19207	5705564
91	33	5306-01-198-6503	96906	MS90728-118L
92	1	2920-00-304-3493	96906	MS53011-1
92	2	5330-00-860-9153	19207	10889926
92	3	5310-00-937-0453	96906	MS35338-145
92	4	5305-01-271-3248	81349	M24240/3-21014
93	1	2920-00-909-2483	19207	10929868
93	2	5310-00-449-2381	96906	MS21245L10
93	3	5310-00-614-3505	96906	MS15795-820
93	4	5315-00-616-5526	96906	MS35756-8
93	5	5306-01-253-4429	96906	MS90728-87L
93	6	5310-00-809-4085	96906	MS27183-16
93	7	5310-00-080-6004	96906	MS27183-14
93	8	5340-01-226-7379	19207	12331901
93	9	5306-01-119-6763	96906	MS90728-64L
93	10	5305-00-709-8531	96906	MS90727-93

CROSS-REFERENCE INDEXES

FIGURE AND ITEM NUMBER INDEX

FIG.	ITEM	STOCK NUMBER	CAGEC	PART NUMBER
93	11	5310-00-209-0965	96906	MS35338-47
93	12	2925-01-228-5800	15434	3047101
93	13	3020-01-184-1932	19207	12331904
94	2	5310-00-484-1718	15434	181466
94	10	5330-00-951-3538	15434	154087
94	11	4810-01-187-4925	15434	3035344
94	12	5310-00-262-2986	15434	67684
94	13	5305-00-509-8106	15434	S189C
95	1	4730-01-142-0192	15434	183649
95	2	4710-01-228-5834	15434	3045140
95	3	5330-01-220-2384	15434	3038058
95	4	4710-01-228-5835	15434	3038055
95	5	4730-01-166-5991	15434	216354
96	1	2815-01-184-6604	15434	3041946
96	2	5305-01-085-8197	15434	3010595
96	3	6680-01-183-4399	15434	3041949
96	4	4710-01-184-4035	15434	3041945
96	5	5310-00-521-8595	15434	S223
96	6	5310-00-080-6004	96906	MS27183-14
96	7	5340-01-185-8623	15434	68152B
96	8	4730-01-089-5902	15434	163759
96	9	5310-00-261-7340	15434	S604
96	10	5305-01-010-2362	96906	MS18154-59
97	16	5365-01-185-8521	15434	69066
97	18	5340-01-143-6045	15434	3008470
98	1	4730-00-909-8627	96906	MS35842-13
98	2		81349	M62217/1-36-4
98	3	4710-01-262-4995	15434	3047104
98	4	5310-00-637-9541	96906	MS35338-46
98	5	5305-00-688-2111	96906	MS90728-63
98	6	4710-01-262-4996	15434	3047103
98	7	5330-01-166-7541	15434	189566
98	8	4730-00-908-3194	96906	MS35842-11
98	9		81349	M62217/1-16-4
98	10	4710-01-262-5000	15434	3047106
98	11	4710-01-262-4999	15434	3047105
99	1	2930-01-229-3431	15434	3043100
99	17	2510-01-262-4982	15434	3047102
99	18	5310-00-809-4085	96906	MS27183-16
99	19	5310-00-209-0965	96906	MS35338-47
99	20	5305-00-071-1788	96906	MS90728-67
99	21	5310-00-584-5272	96906	MS35338-48
99	22	5305-00-071-2069	96906	MS90728-113
100	1		15434	202045
101	1	5310-00-080-6004	96906	MS27183-14
101	2	5305-01-137-6706	15434	3012473
101	3	5305-01-129-4217	15434	3014766
101	4	5310-00-134-4169	15434	63842
101	5	2590-01-109-2075	15434	3005150
101	6	2815-01-188-3265	15434	214939
101	7	2815-01-109-1318	15434	214203

CROSS-REFERENCE INDEXES

FIGURE AND ITEM NUMBER INDEX

FIG.	ITEM	STOCK NUMBER	CAGEC	PART NUMBER
101	8	5330-01-143-8208	15434	3028673
101	9	3040-01-091-0485	15434	3012950
101	10	5330-01-143-8209	15434	3026315
102	1	5305-00-804-6318	15434	S2286
102	2	9905-01-137-4775	15434	3027295
102	3	9905-00-733-7622	15434	105375
102	4	9905-00-473-7260	15434	136403
103	1		96906	MS21920-50
103	2	5306-01-196-0218	96906	MS90728-85L
103	3	4720-01-184-4853	74687	8250
103	4	4730-00-834-1139	96906	MS21920-53
103	5	5310-00-809-4085	96906	MS27183-16
103	6	5310-00-880-8189	96906	MS51967-11
103	7	2940-01-184-4827	18265	ST814-0138
103	8	2940-01-226-2773	60342	RBX00-2251
103	9	5330-00-141-6552	18265	FC1-7804
103	10	5340-01-195-8016	18265	P12-7009
103	11	2940-01-187-9448	18265	FSH00-1638
103	12	9905-01-187-6448	18265	P15-4778
103	13	5310-00-934-9751	96906	MS35650-302
103	14	5310-00-045-3296	96906	MS35338-43
103	15	5340-01-183-2739	19207	12332148
103	16	5306-01-183-2740	19207	12332149
103	17	7690-01-114-3702	19207	12296626
103	18		18265	EGB14-0162
103	19	2910-01-226-3455	18265	P10-9084
103	20	5330-00-477-0338	18265	P01-6972
103	21		18265	P10-9445
103	22	5310-01-044-0685	18265	P10-9062
103	23	5330-01-027-9446	18265	P10-5740
103	24	2940-01-187-9535	18265	P15-2241
103	25	5365-01-147-8146	18265	P10-5738
103	26		18265	P15-4779
103	27	5305-00-446-9901	96906	MS51850-64
103	28	5340-00-177-3711	96906	MS21333-16
103	29		19207	12332526
104	1	4710-01-183-6898	19207	12325743
104	2	2990-01-246-0917	19207	12357357
104	3	5310-00-081-4219	96906	MS27183-12
104	4	5306-01-114-5135	96906	MS90728-32L
104	5	2540-01-246-0918	19207	12357359
104	6	5340-01-153-9424	61393	1431-50A
104	7	5310-00-080-6004	96906	MS27183-14
104	8	5310-00-637-9541	96906	MS35338-46
104	9	5305-00-942-2156	96906	MS18154-60
104	10	5340-01-184-4850	19207	12332029
104	11	2990-01-192-4685	18265	MJM09-0514
104	12	4730-01-183-2728	61393	1427-40A
104	13	2815-01-184-1886	19207	12332264
104	14	5340-01-183-6863	61393	1419-30A
104	15		19207	12352558-1

CROSS-REFERENCE INDEXES

FIGURE AND ITEM NUMBER INDEX

FIG.	ITEM	STOCK NUMBER	CAGEC	PART NUMBER
104	16	5306-01-205-2758	96906	MS90728-63L
104	17	5340-01-219-9427	19207	12332269
104	18	2990-01-183-2642	19207	12332432
104	19	5310-00-732-0558	96906	MS51967-8
104	20	4730-01-182-8968	00671	4112-4-388
104	21	4710-01-217-2561	19207	12335364
104	22		19207	12352558-2
104	23	5340-01-183-2620	19207	12332047
105	1	2910-00-646-9727	53203	20000
105	2	4820-01-185-5760	61112	CS4-6PC
105	3	4730-00-854-5837	96906	MS51815-1SS
105	4	4730-00-239-2503	96906	MS51825-1A
105	5	4730-00-069-1184	96906	MS51823-1
105	6	4710-01-183-2783	97403	13211E9554
105	7	5340-00-057-3026	96906	MS21333-117
105	8	5310-00-184-8974	96906	MS9320-12
105	9	5305-00-115-9526	96906	MS18154-58
105	10	2910-01-017-5314	61112	CA2-STC
105	11	4710-01-187-0997	97403	13211E9555
105	12	4730-01-214-6990	96906	MS51811-1
105	13	4710-01-183-2784	97403	13211E9556
105	14	2910-01-183-2627	61112	CA4-5TC
105	15	5306-01-197-6578	96906	MS90728-33L
105	16	5310-00-081-4219	96906	MS27183-12
105	17	5310-00-880-7744	96906	MS51967-5
105	18	5340-01-088-2385	61112	CS1189
105	19	5930-01-155-7762	78280	CS1190-2
106	1	5306-01-197-1599	96906	MS90728-86L
106	2	5310-00-809-4085	96906	MS27183-16
106	3	2940-00-552-3842	15434	252916
106	4	2940-01-094-9353	15434	252917
106	5		15434	173368
106	6		15434	158139
106	7	2940-01-165-8253	15434	181592
106	8	5315-01-159-1255	15434	3301956S
106	9	4330-01-145-5269	15434	183342S
106	10	5330-01-044-2096	33457	153518
106	11	5310-01-044-2112	33457	153520S
106	12		33457	173176
106	13		33457	3301179
106	14	5310-01-044-2052	33457	8265S
106	15	5306-01-155-8461	15434	3301949S
107	1	4730-00-812-7999	96906	MS51504A6
107	2	4730-00-908-6292	96906	MS35842-14
107	3	4720-01-306-5704	19207	12357360-1
107	4	5305-00-225-3843	96906	MS90728-8
107	5	5310-00-809-4058	96906	MS27183-10
107	6	4720-01-217-2828	19207	12355302
107	7	4720-01-289-8239	19207	12357360-2
107	8	4730-01-005-0623	96906	MS51508A6-6S
107	9	5340-01-245-7599	19207	12357363-1

CROSS-REFERENCE INDEXES

FIGURE AND ITEM NUMBER INDEX

FIG.	ITEM	STOCK NUMBER	CAGEC	PART NUMBER
107	10	5340-01-245-7600	19207	12357363-2
107	11	4730-00-908-3193	96906	MS35842-12
107	12		81349	M62217/1-16-57
107	13	5340-01-197-7597	19207	7529133-7
107	14	5310-00-732-0558	96906	MS51967-8
107	15	5340-01-218-7160	19207	12352680
107	16	5310-00-184-8974	96906	MS9320-12
107	17	5306-01-112-4340	96906	MS90728-58L
107	18	4730-01-070-9214	96906	MS51518B8
107	19	4720-01-249-2027	96906	MS52103AC81120R
107	20	4730-00-441-8700	96906	MS51500A8-4
107	21	4710-01-254-6553	19207	12357418
107	22		81349	M62217/1-44-6
107	23	5306-01-114-0963	96906	MS90728-60L
107	24	5330-01-165-1370	97403	13204E3530
107	25	5310-00-088-1251	96906	MS51922-1
107	26	5340-00-702-2848	96906	MS21333-128
107	27	4730-00-080-7040	96906	MS51525B6-8
107	28	5330-00-808-0794	96906	MS28778-8
107	29	4730-01-243-3539	97111	H3-63-T8
107	30	4730-01-243-6319	97111	H3-62SL-T8
108	1	4820-01-120-4532	91816	P59-500
108	2	4730-01-216-5574	19207	12355291
108	3	9905-01-216-5583	19207	12355292
108	4	5310-00-081-4219	96906	MS27183-12
108	5	5306-01-196-0445	96906	MS90728-31L
108	6	4730-00-995-1559	96906	MS51500A6
108	7	4720-01-220-6651	19207	12355287-1
108	8	4730-00-231-3018	96906	MS51504A16-12
108	9	4730-00-021-1802	96906	MS51500A16-12
108	10	4730-00-163-0236	96906	MS51521A16
108	11	4730-01-192-9578	96906	MS51522A16
108	12	5340-01-231-5357	19207	7529133-9
108	13	5306-01-112-4340	96906	MS90728-58L
108	14	5306-01-112-7867	96906	MS51095-358L
108	15	5340-01-184-4890	97403	13214E2852
108	16	5340-01-224-3763	19207	12352619
108	17	5310-00-184-8974	96906	MS9320-12
108	18	5310-00-732-0558	96906	MS51967-8
108	19	4730-01-132-1183	96906	MS51518B16
108	20	4720-01-306-7492	19207	12357156
108	21	4720-01-221-1450	19207	12352677-6
108	22	5340-01-218-7160	19207	12352680
108	23	5306-01-114-0963	96906	MS90728-60L
108	24	4720-01-221-1449	19207	12352677-5
108	25	4730-01-221-7329	19207	12355293-2
108	26	4730-00-827-5852	96906	MS51523A16
109	1	5310-00-809-5998	96906	MS27183-18
109	2	5306-01-194-4974	96906	MS90728-111L
109	3	5340-01-184-4824	19207	12332014
109	4	5310-00-732-0559	96906	MS51968-8

CROSS-REFERENCE INDEXES

FIGURE AND ITEM NUMBER INDEX

FIG.	ITEM	STOCK NUMBER	CAGEC	PART NUMBER
109	5	5310-00-080-6004	96906	MS27183-14
109	6	2930-01-192-4583	19207	12332022
109	7	5306-01-112-8682	96906	MS90728-59L
109	8	5306-01-199-4344	96906	MS90727-64L
109	9	3020-01-184-4852	19207	12332002
109	10	4010-01-183-2714	19207	12332000
109	11	5315-00-842-3044	96906	MS24665-283
109	12	5365-00-803-7303	96906	MS16624-1075
109	13	5340-01-182-8776	19207	12331989
109	14	5310-01-112-6120	88044	AN960XC1216L
109	15	3120-00-981-5117	26124	12DU16
109	16	5310-00-820-6653	96906	MS35338-50
109	17	5310-00-241-6640	96906	MS16228-60
109	18	5315-00-836-9628	96906	MS16562-52
109	19	3040-01-201-1076	19207	12335453
109	20	5315-01-201-0997	19207	12335452
109	21	3020-01-183-2712	71176	2056P
109	22		71176	IDF1-5-8
109	23	5305-00-724-7236	96906	MS90728-169
109	24	5306-00-225-8499	96906	MS90725-34
109	25	5310-00-851-2677	96906	MS35691-49
109	26	5315-00-081-7041	96906	MS20392-7C35
109	27	5306-01-114-0963	96906	MS90728-60L
109	28	5305-00-269-3239	96906	MS90727-63
109	29	5340-01-159-6456	76005	J-11729-127
109	30	2590-01-245-7560	19207	12357241
109	31	3030-01-242-6377	24161	81780016
109	32	5306-00-226-4827	96906	MS90728-34
109	33	5365-01-132-3825	71176	P1-1 1/4
109	34	5315-01-110-4790	96906	MS20066-348
109	35	5315-00-060-4324	96906	MS20066-211
109	36	4140-01-182-8905	58163	40430-1
110	1	5310-00-225-8327	96906	MS19068-092
110	2	5310-00-205-8249	96906	MS19070-092
110	3	2930-01-198-2832	58163	40102-1
110	4	5315-01-026-4522	96906	MS20066-280
110	5	3040-01-199-7821	58163	40103-1
110	6	5305-00-088-8332	96906	MS35190-272
110	7	5365-01-202-7727	58163	40327-1
110	8	5365-01-194-0757	58163	723071-4
110	9	3110-00-097-6353	03497	3300A54A0053-001
110	10	5310-01-194-3122	05341	BS308
110	11	3130-01-201-8763	58163	40314-1
110	12	3120-01-129-2151	58163	723071-2
110	13	5310-00-682-5444	96906	MS19070-082
110	14	5310-00-543-4863	96906	MS19068-082
110	15	5305-00-068-0543	80205	NAS1351-3H-10P
110	16		00624	900010-32CAR
110	17	5310-00-167-0818	88044	AN960-10
110	18	3040-01-198-8727	58163	40112-1
110	19	3040-01-198-8728	58163	40099-1

CROSS-REFERENCE INDEXES

FIGURE AND ITEM NUMBER INDEX

FIG.	ITEM	STOCK NUMBER	CAGEC	PART NUMBER
110	20	5305-00-253-5604	96906	MS21318-2
110	21	9905-01-187-6447	58163	4C128-1
111	1	4140-01-183-8348	19207	12331990
111	2		19207	12331995
111	3		19207	12331992
111	4		19207	12331991
111	5	9905-01-183-2692	19207	12331999
111	6	5305-00-175-3230	96906	MS21318-14
111	7	5310-00-582-5965	02614	N405P41B6
111	8	5310-00-768-0319	96906	MS51968-2
111	9	5360-01-207-7829	19207	12331998
112	1		19207	12355369-2
112	2	2590-01-193-3610	19207	12332021
112	3	5307-01-016-4423	96906	MS51864-106-20
112	4	5310-00-809-5998	96906	MS27183-18
112	5	5310-00-068-8067	96906	MS17829-8F
112	6		19207	12355368-2
112	7	2540-01-216-5568	19207	12355383
112	8		19207	12355368-1
112	9	2930-01-216-5646	67049	306661
113	1	4710-01-192-3460	67049	302391
113	2		81349	M62217/I-8-19
113	3	2930-00-337-0027	96906	MS51062-1
113	4	5315-00-514-2660	96906	MS29523-1
113	5		81348	MS51062-1 NOTE 3 6TRADE1
113	6	2930-01-192-8238	67049	301318
113	7	5305-00-068-0510	96906	MS90728-60
113	8		96906	MS90728-59
113	9	5310-00-637-9541	96906	MS35338-46
113	10	5330-01-205-8996	67049	301327
113	11	2930-01-192-4681	67049	301338
113	12	5340-01-205-9260	67049	301345
113	13	5310-00-732-0558	96906	MS51967-8
113	14	2930-01-191-9388	67049	301334
113	15	2930-01-191-8466	67049	301328
113	16	5340-01-270-1802	67049	306660
113	17	2930-01-231-0634	67049	301335
113	18	2930-01-192-8237	67049	301347
113	19		81349	M62217/I-8-39
114	1	4730-00-812-7999	96906	MS51504A6
114	2	4310-00-640-3774	90005	569020-01
114	3	4730-00-995-1559	96906	MS51500A6
114	4	4720-01-289-8238	19207	12357136-1
114	5	4730-01-194-1971	97403	13214E2839
114	6	4710-01-183-8444	97403	13211E8762
114	7	4730-01-183-8389	97403	13214E2838
114	8	4710-01-183-8443	97403	13211E8761
114	9	4730-01-183-8429	97403	13214E2081
114	10	4710-01-183-6869	97403	13211E8765
114	11	4710-01-183-6868	97403	13211E8764

CROSS-REFERENCE INDEXES

FIGURE AND ITEM NUMBER INDEX

FIG.	ITEM	STOCK NUMBER	CAGEC	PART NUMBER
114	12	4730-01-027-2243	96906	MS51819-5
114	13	4730-01-195-6353	97403	13214E2258
114	14	4730-01-194-5336	81348	WW-P-471BDQBCBA
114	15	5306-01-197-1599	96906	MS90728-86L
114	16	5310-00-809-4085	96906	MS27183-16
114	17	5340-01-183-2736	97403	13211E8769
114	18	4730-00-096-6331	96906	MS51815-5
114	19	4710-01-183-6870	97403	13214E2079
115	1	5306-01-196-0219	96906	MS90728-90L
115	2	5310-00-809-4085	96906	MS27183-16
115	3	5330-01-165-1355	97403	13204E3547
115	4	3020-01-182-9036	97403	13214E2836
115	5	5365-01-183-2639	97403	13214E2837
115	6	5365-01-194-0878	81349	M27426-1164A
115	7	5306-01-197-1598	96906	MS90728-88L
115	8	5330-01-165-1369	97403	13214E2340
115	9	5306-01-196-6442	96906	MS90728-110L
115	10	3040-01-183-2758	97403	13204E3548
115	11	2520-01-171-0027	97403	13211E8750
116	1	3040-01-183-8485	97403	13211E8751
116	2	2520-01-183-8350	97403	13211E8755
116	3	5305-01-206-9676	96906	MS24667-63L
116	4	3020-01-183-8400	97403	13204E3408
116	5	5365-01-183-8453	97403	13214E2076
116	6	5365-00-787-2192	96906	MS16626-1150
116	7	3020-01-183-8401	97403	13204E3410
116	8	3020-01-183-8404	97403	13204E3407
116	9	5365-00-260-4883	96906	MS16625-1393
116	10	3110-01-184-1905	43334	1309WB
116	11	5330-01-114-9226	96906	MS28775-258
116	12	2520-01-183-8349	97403	13204E3409
116	13	5310-00-809-4085	96906	MS27183-16
116	14	5306-01-197-1599	96906	MS90728-86L
116	15	3110-01-183-2686	60380	WJ243024
116	16	5330-00-807-8993	96906	MS28775-228
116	17	3040-01-183-8449	97403	13204E3415
116	18	2520-01-183-8351	97403	13214E2783
116	19	5306-01-197-1598	96906	MS90728-88L
116	20	3040-01-216-5575	19207	12352615
116	21	5340-01-183-2737	97403	13214E2847
116	22	2520-01-183-2641	97403	13211E8754
116	23	5330-01-019-2450	96906	MS28775-269
116	24		97403	13211E8757
116	25	3110-00-952-2892	60038	LL225710
116	26	3110-00-952-2881	60038	LL225749
116	27	3020-01-183-8403	97403	13211E8756
116	28	3110-00-100-5989	96906	MS19081-67
116	29	5330-01-117-8833	96906	MS28775-272
116	30	3020-01-183-8402	97403	13204E3416
116	31	5315-00-951-4082	96906	MS35674-30
116	32	5340-01-284-9894	96906	MS51830A109

CROSS-REFERENCE INDEXES

FIGURE AND ITEM NUMBER INDEX

FIG.	ITEM	STOCK NUMBER	CAGEC	PART NUMBER
116	33	5340-01-284-8286	96906	MS51830A110
116	34	5340-01-286-7321	96906	MS51831A109
117	1	4320-01-132-0610	02892	1919A4B1L
117	2	5305-01-130-7925	02892	A116X13
117	3	5310-01-129-8972	02892	A252X54
117	4		02892	3X1916X1
117	5	5315-01-130-1138	02892	A553X5
117	6	3110-01-129-2512	02892	A340X47
117	7		02892	A991X38
117	8		02892	A908X34
117	9		02892	12X19X24
117	10	4320-01-193-3330	02892	6X1916X22
117	11	4320-01-133-7864	02892	6X1916X21
117	12		02892	A791X73
117	13	4730-01-128-3997	02892	A300X1
117	14		02892	2X19X25
117	15		02892	A907X62
117	16	5365-01-194-5266	02892	A515X27
117	17		02892	A361X93
117	18	5330-01-165-1371	97403	13211E9486
117	19	5310-00-809-5998	96906	MS27183-18
117	20	5306-01-196-0442	96906	MS90728-110L
118	1	5306-01-114-0963	96906	MS90728-60L
118	2	5310-00-809-4061	96906	MS27183-15
118	3	4330-01-184-4976	00736	03W182228
118	4	2940-00-787-7141	00736	03FA18-221
118	5	5310-01-223-9568	00736	21002
118	6	5310-00-608-1053	00736	A15621
118	7	5330-00-599-1629	00736	A15621-1
118	8	7690-01-190-5197	00736	02FC30
118	9		00736	B16367-158
118	10	5330-00-251-9395	00736	A16367-207
118	11		00736	032A15-158
119	1		96906	MS90725-60
119	2	5310-00-080-6004	96906	MS27183-14
119	3	2590-01-179-7529	97403	13214E2429
119	4	5310-00-081-4219	96906	MS27183-12
119	5	5310-00-407-9566	96906	MS35338-45
119	6	5306-00-225-8498	96906	MS90725-33
119	7	5305-00-071-2070	96906	MS90728-114
119	8	5310-00-809-5998	96906	MS27183-18
119	9	5310-00-595-7421	96906	MS17829-8C
119	10	4730-00-289-0383	96906	MS51500A4
119	11	4720-01-289-8216	19207	12357280-1
119	12		26337	857220
119	13	4720-01-296-8451	19207	12357144
119	14	4730-01-126-9758	98441	0502-8-8
119	15	4730-00-196-1467	91340	12175-31
119	16	2590-01-185-0173	97403	13214E2392
119	17	5310-00-627-6128	96906	MS35335-35
119	18	4730-00-019-2067	96906	MS51953-49

CROSS-REFERENCE INDEXES

FIGURE AND ITEM NUMBER INDEX

FIG.	ITEM	STOCK NUMBER	CAGEC	PART NUMBER
119	19	5305-01-140-9118	96906	MS90728-59
119	20	4820-01-037-9283	86768	483-3/8B1-2
119	21	4730-01-193-3641	81348	WW-F-471BCQBCCB
119	22	4730-00-289-5484	96906	MS51500A4-4
119	23	4730-00-214-8108	19207	12325725
119	24	4720-01-289-8214	19207	12357280-12
119	25	5340-00-989-1771	96906	MS21333-123
119	26	4730-00-861-1814	96906	MS51525A4-6
119	27	5330-00-804-5695	96906	MS28778-6
119	28	4730-01-254-6548	97111	H2-62SL-T6
119	29	4730-01-245-7605	97111	H2-63-T6
119	30	4720-01-289-8215	19207	12357280-8
119	31	4730-00-647-3207	96906	MS51504A4
119	32	4720-01-289-8220	19207	12357280-9
119	33	4720-01-289-8222	19207	12357280-11
119	34	4730-00-555-1764	96906	MS51504A8
119	35	4720-01-289-8224	19207	12357280-4
119	36	4720-01-289-8218	19207	12357280-6
119	37	4720-01-296-2978	19207	12357143
119	38	5305-00-071-2509	96906	MS90728-12
119	39	5310-00-582-5965	96906	MS35338-44
119	40	5310-00-809-4058	96906	MS27183-10
119	41	4730-01-179-7530	97403	13214E2631
119	42	4720-01-289-8221	19207	12357280-10
119	43	4720-01-289-8223	19207	12357280-3
119	44	4730-00-226-8874	19207	12325823
119	45	4730-01-201-1001	19207	12325726
119	46		81343	J514 2-2 140139C A
119	47	5340-00-050-2740	96906	MS21333-75
119	48	4720-01-289-8219	19207	12357280-7
119	49		81348	WW-F-471BCQBCDC
119	50	4720-01-289-8217	19207	12357280-2
119	51	4720-01-289-8225	19207	12357280-5
120	1	2590-01-166-6299	40152	241624
120	2	5305-00-007-6338	12603	1C512
120	3	5310-00-407-9566	96906	MS35338-45
120	4	5340-01-198-8261	40152	227404
120	5	5330-01-186-7168	40152	227403
120	6	5315-00-839-2325	96906	MS24665-132
120	7	5310-00-823-8804	96906	MS27183-9
120	8	2530-01-192-2430	40152	241651
120	9	2520-01-206-3879	40152	227396
120	10	5315-01-187-8816	40152	227395
120	11		89881	241830
120	12	3110-00-902-3772	96906	MS17131-32
120	13	5330-01-187-6124	01212	411100R
120	14	5315-01-187-6329	40152	867753
120	15	2925-01-186-9497	40152	241658
120	16	5330-01-053-9825	12603	25K30030
120	17	5365-01-166-9610	40152	227397

CROSS-REFERENCE INDEXES

FIGURE AND ITEM NUMBER INDEX

FIG.	ITEM	STOCK NUMBER	CAGEC	PART NUMBER
120	18	2920-01-204-7695	40152	241653
120	19	5310-00-027-2342	12603	222598
120	20	2520-00-015-7139	12603	224513
120	21	5310-01-186-5425	40152	224514
120	22	3110-00-100-6153	88042	AAF216CP20
120	23		89881	241656
120	24	5330-00-582-2855	96906	MS28775-113
120	25	2520-00-979-8765	12603	220983
120	26	5315-00-058-9808	96906	MS16562-253
120	27	5305-01-231-0613	12603	10514
120	28	5365-00-674-6831	12603	24K6
120	29	5360-01-189-7782	40152	227402
120	30	2520-01-230-6802	12603	228502
120	31	9905-01-013-8723	81349	M43436/3-1
120	32	5935-00-572-9180	19207	8338566
120	33	5310-00-833-8567	19207	8338567
120	34	5999-00-057-2929	96906	MS27148-2
121	1	5340-01-231-5357	19207	7529133-9
121	2	4720-01-192-9643	19207	12352677-11
121	3	4730-00-930-5392	96906	MS51525A16
121	4	5330-00-804-5694	96906	MS28778-16
121	5	4730-01-248-9449	97111	H6-62SL-T16
121	6	4730-01-245-7604	97111	H6-63-T16
121	7	4720-01-248-8819	19207	12352677-12
121	8	4730-00-840-7236	96906	MS51527A16
121	9	4730-00-089-3406	81349	M52525/16-24
121	10	5330-00-579-7927	96906	MS28775-225
121	11	5306-01-123-6891	96906	MS90728-113L
121	12	4720-01-182-9017	19207	12352592
121	13	5340-01-197-7597	19207	7529133-7
121	14	4720-01-221-2067	19207	12352677-7
121	15	4730-01-193-2587	97403	13211E9018-9
121	16	5330-00-816-3546	96906	MS28778-20
122	1	4730-00-833-9315	96906	MS51504A16
122	2	4720-01-248-8820	19207	12352677-4
122	3	5310-00-732-0558	96906	MS51967-8
122	4	5310-00-184-8974	96906	MS9320-12
122	5	5340-01-231-5357	19207	7529133-9
122	6	5340-01-216-5572	19207	12352649
122	7	5306-01-112-4340	96906	MS90728-58L
122	8	5306-01-114-0963	96906	MS90728-60L
122	9	5340-00-739-7787	19207	7397787
122	10	5340-01-216-5573	19207	12352650
122	11	5340-01-197-7597	19207	7529133-7
122	12	4720-01-183-2746	19207	12352618
122	13	4720-01-221-1451	19207	12352677-3
122	14	4730-00-803-5776	96906	MS51500A6-2
122	15	5330-00-804-5694	96906	MS28778-16
122	16	4730-00-930-5392	96906	MS51525A16
122	17	4730-01-192-9578	96906	MS51522A16
122	18	4730-00-835-3003	96906	MS51504A6-6

CROSS-REFERENCE INDEXES

FIGURE AND ITEM NUMBER INDEX

FIG.	ITEM	STOCK NUMBER	CAGEC	PART NUMBER
122	19	4730-01-193-7391	81349	WW-P-471BEQBCFC
122	20	4730-01-192-3497	19207	12331952
122	21	4730-01-223-0536	96906	MS51520A16
122	22	5340-01-326-7776	19207	12357430
122	23	4730-00-375-6405	96906	MS51860-60
122	24	4710-01-220-8406	19207	12352652
122	25	4730-01-091-1368	96906	MS51527A16S
122	26	4710-01-219-7918	19207	12352620
122	27	5306-01-195-1580	96906	MS90728-89L
122	28	4730-01-182-9035	00624	500024-20-16S
122	29	4710-01-219-7919	19207	12352621
122	30	5310-00-768-0318	21439	C1857-007
122	31	5310-00-184-8992	96906	MS9320-14
122	32	4730-01-221-7325	19207	12352655
122	33	5306-01-196-0442	96906	MS90728-110L
122	34	4720-01-220-9890	19207	12352677-8
122	35	4720-01-221-8561	19207	12352677-1
122	36	4730-00-231-3018	96906	MS51504A16-12
122	37	4730-00-196-1468	96906	MS51953-97
122	38	4730-00-278-3144	19207	7350911
122	39	4730-01-090-4922	96906	MS51514A16
122	40	4730-01-221-7329	19207	12355293-2
122	41	4820-01-120-4532	91816	P59-500
122	42	4730-00-995-1559	96906	MS51500A6
122	43	4720-01-220-6652	19207	12355287-2
122	44	4720-01-223-7658	19207	12352677-2
122	45	4730-00-255-0560	81349	MS2525/16-20
122	46	5330-00-297-9990	96906	MS28775-222
122	47	5330-00-579-7927	96906	MS28775-225
122	48	5306-01-123-0891	96906	MS90728-113L
122	49	4730-00-089-3406	81349	M52525/16-24
122	50	4720-01-194-0037	19207	12352651
122	51	4720-01-194-0036	19207	12352510
122	52	5306-01-112-8681	96906	MS90728-62L
122	53	4730-00-755-7609	81349	M52525/16-16
122	54	5330-00-579-7925	96906	MS28775-219
122	55	4720-01-183-2745	19207	12352593
122	56	5310-01-141-2512	96906	MS51860-12
122	57	4730-01-194-5134	96906	MS51509A24
122	58	5330-00-808-0794	96906	MS28778-8
122	59	4730-00-822-5609	96906	MS51527A8
122	60	4720-01-296-2975	19207	12357162
122	61	4730-01-070-9214	96906	MS5151888
123	1	5310-00-732-0558	96906	MS51967-8
123	2	5310-00-809-4061	96906	MS27183-15
123	3	5306-01-119-6763	96906	MS90728-64L
123	4	4330-01-313-7825	9E462	5575208
123	5		24617	5574892
123	6		24617	5574894
123	7	5330-00-736-3508	70040	5575086
123	8	5360-00-982-2040	24617	5574896

CROSS-REFERENCE INDEXES

FIGURE AND ITEM NUMBER INDEX

FIG.	ITEM	STOCK NUMBER	CAGEC	PART NUMBER
123	9		24617	5573870
123	10		24617	5574893
123	11	5340-00-608-9214	24617	454557
123	12		24617	5573534
123	13		24617	5573102
123	14		24617	5575210
123	15		24617	9420174
123	16	5330-00-604-8094	24617	5187310
123	17	5330-00-629-6340	24617	5187309
123	18	5365-00-262-4701	24617	5577938
123	19		24617	25010222
123	20		24617	5575211
123	21		24617	5573538
123	22	4730-00-082-0856	70040	5575206
123	23	4730-00-788-5959	24617	444613
124	1	5310-00-809-8533	96906	MS27183-23
124	2	5306-01-195-1581	96906	MS90728-190L
124	3		40152	241901
124	4	5305-00-058-1082	96906	MS51861-34
124	5	2520-01-181-6423	40152	288835
125	1		40152	239097
125	2	3020-01-076-9061	71198	35 S/C C/L
125	3	3020-01-208-3397	40152	239096
125	4	5330-01-191-0495	40152	239095
125	5	3040-01-189-2171	40152	239094
125	6	5310-00-180-0277	12603	4806
125	7	5305-00-068-0511	96906	MS90728-62
125	8	5330-01-069-3126	12603	235961
125	9	3110-00-554-5304	12603	743458
125	10	3020-01-191-2738	40152	219883
125	11	5365-01-204-2592	40152	223973
125	12	2520-01-203-9888	40152	450247
125	13	5310-00-975-2075	12603	8006
125	14	5307-00-401-0883	12603	203253
126	1	2520-01-189-6618	40152	239399
126	2	4710-01-189-0708	40152	239052
126	3	4710-01-189-0709	40152	239053
126	4	5340-01-020-2889	12603	6H29
126	5	5310-01-192-8884	12603	25E15
126	6	5320-01-191-6351	12603	1H530
126	7	4710-01-189-0710	40152	239054
126	8	4710-01-189-0711	40152	239055
126	9	4710-01-189-0712	40152	239056
126	10	4710-01-189-1697	40152	239057
126	11	4710-01-189-0713	40152	239060
126	12	4710-01-189-0714	40152	239061
126	13	4710-01-189-4565	40152	239062
126	14	4710-01-189-1698	40152	239058
126	15	4710-01-189-1699	40152	239059
126	16		12603	1H534
126	17	2520-00-051-5327	12603	222067

CROSS-REFERENCE INDEXES

FIGURE AND ITEM NUMBER INDEX

FIG.	ITEM	STOCK NUMBER	CAGEC	PART NUMBER
126	18	4710-01-189-1700	77237	239064
126	19		89881	239051
126	20	4710-01-189-2100	40152	239063
127	1	5306-01-194-0569	40152	239455
127	2	2520-01-189-6617	40152	240407
127	3	5365-00-282-1831	96906	MS16624-1215
127	4	3110-00-155-6565	24617	BL1211L
127	5	5365-00-260-4875	96906	MS16625-1354
127	6	5365-00-838-8715	12603	224083
127	7	3110-00-155-6560	96906	MS19077-11
127	8	5365-00-175-1315	12603	711161
127	9	3020-01-191-2736	77237	239070
127	10	3040-01-190-0450	40152	239144
127	11	3110-00-132-6967	40152	225603
127	12	3020-01-189-1014	40152	239071
127	13	3040-01-191-5141	40152	239143
127	14	3040-01-189-6604	40152	239148
127	15	5365-01-193-7139	40152	223882
127	16	3110-01-199-1392	98878	SB22211
127	17	3110-01-193-0427	40152	239104
127	18	5310-00-209-0965	96906	MS35338-47
127	19	5306-00-104-2845	12603	10716
127	20	5365-01-198-8232	40152	239103
127	21	5305-01-018-5592	12603	220714
127	22		96906	MS20995C47AR
127	23	3040-01-189-4624	40152	217548
127	24	5365-01-193-2947	40152	233662
127	25	3110-01-204-3426	92563	SB22313-12
127	26	3110-00-100-6151	12603	10J08
127	27	3110-01-197-5062	40152	217560
127	28	3020-01-192-8391	40152	239074
127	29	3040-01-190-0449	40152	232393
127	30	3110-01-197-2646	51600	U-5211-L
127	31	2520-00-455-5634	12603	217156
127	32	3040-01-189-6603	40152	239080
127	33	3110-00-702-3088	52676	22211C
127	34	3020-01-190-1102	40152	239149
127	35	5365-00-200-8772	96906	MS16624-1262
127	36	3020-01-191-9441	40152	239147
127	37	5365-01-194-0756	40152	241781
127	38	5365-00-809-1518	96906	MS16624-1325
127	39	3020-01-189-1803	40152	239081
127	40	3020-01-192-9770	40152	239138
127	41	3020-01-192-3686	40152	239150
127	42	3110-00-923-1246	12603	230886
127	43	3110-00-556-8162	60380	WJ344024
127	44	3040-01-191-4160	40152	239078
127	45	3110-00-905-2789	03504	225840
127	46	3110-00-100-7349	43334	U1313TM
127	47	3020-01-191-2737	40152	239075
127	48	5365-01-193-7138	40152	223870

CROSS-REFERENCE INDEXES

FIGURE AND ITEM NUMBER INDEX

FIG.	ITEM	STOCK NUMBER	CAGEC	PART NUMBER
127	49		12603	6C02628
127	50	3020-01-191-6677	40152	239112
127	51	5330-01-228-1416	01212	41C389R
127	52	5330-01-191-0530	40152	239115
127	53	5305-01-209-7184	12603	94C524
127	54	5310-00-407-9566	96906	MS35338-45
127	55	5365-01-198-8214	40152	239116
127	56	5365-01-198-8215	40152	239121
127	57	5365-01-198-8216	40152	239122
127	58	3110-00-155-7760	60038	L319249
127	59	3110-00-155-7770	60038	L319210
127	60	3130-01-198-5552	40152	239107
127	61	5315-00-045-4037	12603	214295
128	1	5306-01-197-4445	12603	21C612
128	2		40152	237328
128	3		40153	239065
128	4	5330-01-191-2531	77237	239066
128	5	4730-01-189-6694	40152	239067
128	6	5310-00-180-0277	12603	4E06
128	7	5305-00-103-9814	12603	1C636
128	8	5330-01-191-0514	40152	237154
128	9	5310-00-595-7237	96906	MS35333-42
128	10	5305-00-912-5113	96906	MS51096-359
128	11	5340-01-195-5959	40152	239069
128	12	5999-00-996-3743	31007	3C4709C1
128	13	5330-00-950-7731	12603	218376
128	14	5330-00-807-8993	96906	MS28775-228
128	15	2520-01-189-8954	40152	240869
128	16	5310-01-018-0683	12603	222960
129	1	5330-00-949-6241	12603	217653
129	2	5330-00-914-5828	12603	25K40026
129	3	5310-00-180-0277	12603	4E06
129	4	5306-00-741-7519	12603	1C616
129	5	5305-01-057-3058	12603	1C640J
129	6	5305-00-725-2317	96906	MS90728-64
129	7	2520-01-183-2638	40152	239047
130	1	4730-00-891-0205	40152	227418
130	2		12603	91F-07
130	3	2520-00-891-0192	40152	228096
130	4	2520-00-891-0191	40152	228095
130	5	2520-00-470-6272	12603	228094
130	6	3110-00-183-9901	03504	1C6358
130	7	5310-00-930-5150	40152	743314
130	8	5365-00-891-0207	40152	227423
130	9	5330-01-053-9825	12603	25K30030
130	10	2520-00-891-0201	40152	227550
130	11	4730-00-499-9837	12603	16F08
130	12	5315-00-930-6204	40152	3C0058
130	13	4730-00-089-2515	12603	40K-04
130	14	4730-00-105-2684	12603	40K02
130	15	5330-00-930-5163	40152	731964

CROSS-REFERENCE INDEXES

FIGURE AND ITEM NUMBER INDEX

FIG.	ITEM	STOCK NUMBER	CAGEC	PART NUMBER
130	16	4730-00-891-0206	40152	227422
130	17	5315-00-052-0146	12603	654724
130	18		89881	239090
130	19	2520-00-891-0202	40152	227555
130	20	5340-00-891-0203	40152	227556
130	21	5340-00-930-7601	12603	659041
130	22	5340-00-930-5718	40152	227558
130	23	4730-00-891-0204	12603	227557
130	24	2520-00-891-0195	40152	227562
130	25	2520-00-891-0194	40152	227561
130	26	5365-00-401-2065	12603	230106
130	27	5365-00-558-8482	96906	MS16627-1112
130	28	4730-01-189-8578	12603	36F1
130	29	2520-00-979-8765	12603	220983
130	30	5330-00-582-2855	96906	MS28775-113
130	31	5315-00-451-0089	12603	230520
130	32	4820-01-189-1798	40152	239527
130	33	5330-00-706-3188	12603	25K40024
130	34		89346	222041
130	35	5310-00-514-6674	96906	MS35335-34
130	36	5305-00-007-6338	12603	10512
130	37	5340-01-197-1580	40152	239091
130	38	4820-00-922-1953	12603	217650
130	39	5365-00-891-0214	40152	217652
130	40	3110-00-948-9797	96906	MS19061-20019
130	41	5360-01-195-5586	40152	239092
130	42	5360-00-964-4656	12603	217648
130	43	5360-00-964-4546	12603	217649
130	44	5360-00-250-5622	03504	231134
130	45	2520-00-460-6440	03504	230105
130	46	2520-00-460-6433	03504	230104
130	47	5365-00-558-8482	96906	MS16627-1112
130	48	5340-00-401-2070	03504	230103
130	49	5340-00-930-5717	40152	227564
130	50	2520-00-460-6430	03504	230102
130	51	5365-01-193-2611	12603	47K10
130	52	5330-00-064-7796	12603	91F-10
131	1		89881	162F/162R/CLUTCH
131	2	2520-01-190-4298	40152	232778
131	3	2520-00-939-6605	12603	232394
131	4	5360-00-914-8353	12603	217334
131	5	5315-00-923-0268	12603	217599
131	6	5365-00-932-1248	40152	217509
131	7	2520-00-949-3695	12603	217158
131	8	5365-00-072-6729	12603	659764
131	9	2520-00-914-7301	12603	217161
131	10	5365-00-930-5141	40152	217099
131	11	2520-00-949-3627	12603	217164
131	12	4310-00-949-7688	03504	217361
131	13	4310-00-799-9844	12603	217411
131	14		40152	243251

CROSS-REFERENCE INDEXES

FIGURE AND ITEM NUMBER INDEX

FIG.	ITEM	STOCK NUMBER	CAGEC	PART NUMBER
131	15	5310-00-255-0014	12603	217165
131	16	5365-00-455-2750	12603	664116
131	17		89881	230751
131	18	2520-00-949-8112	03504	217152
131	19	3110-00-100-6151	12603	10JC8
131	20	3120-00-455-7053	12603	217155
131	21		89881	241436
131	22		12603	236982
131	23	5365-00-930-5143	03504	223997
131	24	4310-00-765-6039	12603	223740
131	25	5365-01-198-8757	40152	217605
131	26	3020-01-212-2503	40152	239077
131	27	3020-01-189-6702	40152	239076
132	1		89881	364/H/L/CLUTCH
132	2	5360-01-194-3159	40152	217347
132	3	5315-01-191-3384	60380	16AH1876
132	4	2520-00-939-6605	12603	232394
132	5	2520-01-190-4298	40152	232778
132	6	5365-00-932-1248	40152	217509
132	7	3020-01-191-4404	40152	217148
132	8		12603	246006
132	9	2520-00-914-7301	12603	217161
132	10	5365-00-930-5141	40152	217099
132	11	2520-00-949-3627	12603	217164
132	12	4310-00-949-7688	03504	217361
132	13	4310-00-799-9844	12603	217411
132	14	5365-00-282-1831	96906	MS16624-1215
132	15	5310-01-194-8903	40152	217151
132	16	5340-00-435-6124	12603	223901
132	17		38443	223358
132	18	3040-01-187-0990	40152	239073
132	19	3110-00-100-6151	12603	10JC8
132	20	3120-01-195-5155	40152	240294
132	21		40152	241672
132	22		43334	225795
132	23	5365-01-193-7137	40152	223855
132	24	2520-01-189-6591	40152	240293
133	1		89881	566CLUTCH
133	2	5360-01-194-3159	40152	217347
133	3	5315-01-191-3384	60380	16AH1876
133	4	2520-00-939-6605	12603	232394
133	5	2520-01-190-4298	40152	232778
133	6	5365-00-932-1248	40152	217509
133	7	3020-01-191-4404	40152	217148
133	8		12603	246006
133	9	2520-00-914-7301	12603	217161
133	10	5365-00-930-5141	40152	217099
133	11	2520-00-949-3627	12603	217164
133	12	4310-00-949-7688	03504	217361
133	13	4310-00-799-9844	12603	217411
133	14	5365-00-282-1831	96906	MS16624-1215

CROSS-REFERENCE INDEXES

FIGURE AND ITEM NUMBER INDEX

FIG.	ITEM	STOCK NUMBER	CAGEC	PART NUMBER
133	15	5310-01-194-6903	40152	217151
133	16	5340-00-435-6124	12603	223901
133	17	3110-01-195-5142	89881	223358
133	18	3040-01-189-8961	40152	239084
133	19	3110-00-100-6151	12603	10J08
133	20	3120-01-195-5155	40152	240294
133	21		89881	241673
133	22		89881	225795
133	23	5365-01-193-7137	40152	223855
133	24	2520-01-189-6591	40152	240293
134	1	5306-00-017-4723	12603	10724
134	2	5310-00-209-0965	96906	MS35338-47
134	3	3110-01-193-7908	40152	239088
134	4	5365-00-838-8715	12603	224083
134	5	5365-00-260-4875	96906	MS16625-1254
134	6	3110-00-132-6967	40152	225603
134	7	3020-01-189-8868	40152	239089
134	8	5365-00-144-6445	12603	224026
134	9	3040-01-189-8647	77237	239085
134	10	5340-00-027-1633	12603	755855
134	11	3010-01-189-6725	40152	239086
134	12	5305-00-071-2070	96906	MS90728-114
134	13	5310-00-671-4109	95019	500357-13
134	14	3040-01-195-0500	12603	239049
134	15	5330-01-191-0494	40152	239050
134	16	5365-00-144-6445	12603	224026
134	17	5340-00-439-8139	12603	214953
134	18	3110-01-197-4734	38443	G310M-T9LR
134	19	3040-00-421-1325	12603	214933
134	20	5330-00-963-0275	12603	222079
134	21	2520-01-189-2146	40152	237405
134	22		12603	7E08
134	23	2520-01-190-9727	40152	237242
134	24	2520-01-190-2537	40152	237243
135	1		40152	241695
135	2	5305-00-103-3041	12603	50620
135	3	4140-01-209-6010	40152	239098
135	4	5330-00-145-1509	12603	232535
135	5	3110-00-227-3240	12603	214988
135	6	5365-00-252-4746	12603	666542
135	7		96906	MS20995C47AR
135	8	5305-00-775-9492	12603	209313
135	9	5310-00-833-3340	24446	N402P13C6
135	10	4140-01-190-1023	40152	219297
135	11	5365-00-803-7304	96906	MS16624-1156
135	12	2520-00-400-6454	12603	214924
135	13	5365-00-803-9971	96906	MS16624-1231
135	14	2520-01-189-1775	40152	239644
135	15	5365-01-018-5218	12603	229566
135	16	5365-01-197-1631	40152	238705
135	17	3110-01-192-3388	38443	3129-T14

CROSS-REFERENCE INDEXES

FIGURE AND ITEM NUMBER INDEX

FIG.	ITEM	STOCK NUMBER	CAGEC	PART NUMBER
135	18	3040-01-189-8960	40152	241650
135	19	5330-01-106-7286	96906	MS28775-261
135	20	3040-01-212-2465	40152	239643
135	21	5330-01-191-3185	40152	237234
135	22	5306-01-199-1228	40152	237233
136	1	5310-00-902-9369	96906	MS21083N8
136	2	3120-01-181-5080	97403	13214E2644-2
136	3	3040-01-179-1349	97403	13211E8977
136	4	3040-00-133-9967	78643	R-111
136	5	5310-00-834-8734	96906	MS35691-37
136	6	5306-01-179-9528	97403	13211E9351-4
136	7	5310-00-211-9271	96906	MS17829-14C
136	8	3040-01-179-1344	97403	13211E8980
136	9	5315-00-012-4553	96906	MS35756-17
136	10	2530-01-178-5403	97403	13211E8981
136	11	3120-01-181-1628	97403	13214E2644-3
136	12	2530-01-171-0099	97403	13211E8982
136	13	5315-00-616-5520	96906	MS35756-14
136	14	5310-00-519-6630	96906	MS17829-12C
136	15	2530-01-171-0032	97403	13214E2777
136	16	5310-00-080-6004	96906	MS27183-14
136	17	5310-00-637-9541	96906	MS35338-46
136	18	5305-00-068-0510	96906	MS90728-60
136	19	5310-00-483-8790	96906	MS17829-6C
136	20	5310-00-584-5272	96906	MS35338-48
136	21	3040-01-179-1347	97403	13211E8972
136	22	3040-01-179-1348	97403	13211E8974
136	23	5306-01-112-8681	96906	MS90728-62L
136	24	3040-01-171-0087	19207	12332161
136	25	5306-01-179-7600	97403	13211E8976
136	26	5310-00-809-5998	96906	MS27183-18
136	27	5340-01-171-0065	19207	12332159
136	28	2530-01-246-1227	97403	13211E8973
136	29	5305-00-782-9489	96906	MS90728-66
137	1	5310-00-081-4219	96906	MS27183-12
137	2	5310-00-903-8282	96906	MS21083N4
137	3	5340-01-245-2528	19207	12357432
137	4	5310-00-851-2682	96906	MS35691-17
137	5	5306-01-195-6633	97403	13211E9350
137	6	5340-01-245-2527	19207	12357431
137	7	5310-00-853-9335	96906	MS35691-13
137	8	5306-00-225-9089	96906	MS90726-34
137	9	3040-01-264-9691	19207	12362035
137	10	5310-00-902-9369	96906	MS21083N8
137	11	5310-00-834-8734	96906	MS35691-37
137	12	3040-00-133-9967	78643	R-111
137	13	5310-00-483-8790	96906	MS17829-6C
137	14	5305-00-269-3218	96906	MS90725-68
137	15	3040-01-060-4770	97403	13211E9356
137	16	5310-00-584-5272	96906	MS35338-48
137	17	5306-01-195-6634	97403	13211E9351-1

CROSS-REFERENCE INDEXES

FIGURE AND ITEM NUMBER INDEX

FIG.	ITEM	STOCK NUMBER	CAGEC	PART NUMBER
137	18	5310-00-660-3381	96906	MS21083N5
137	19	5306-00-225-9088	96906	MS90726-33
137	20	5340-01-204-0375	97403	13211E9358
137	21	5305-00-068-0510	96906	MS90728-60
137	22	5310-00-637-9541	96906	MS35338-46
137	23	5310-00-080-6004	96906	MS27183-14
137	24	5305-00-984-6193	96906	MS35206-245
137	25	9905-01-179-1167	19207	12325752
137	26	5340-01-252-9793	19207	12362036
137	27	9905-01-179-1168	19207	12325753
137	28	5310-00-596-7693	96906	MS35335-31
137	29	5310-00-934-9757	96906	MS35649-282
137	30	5355-01-181-6415	72512	55M
137	31	5315-00-616-5514	96906	MS35756-6
137	32	3120-01-181-1625	97403	13214E2644-1
138	1	5306-01-112-4340	96906	MS90728-58L
138	2	5310-00-637-9541	96906	MS35338-46
138	3	5310-00-080-6004	96906	MS27183-14
138	4	3040-01-227-8895	19207	12355565
138	5	5355-01-181-6415	72512	55M
138	6	5305-00-984-6193	96906	MS35206-245
138	7	9905-01-179-1166	19207	12325751
138	8	5310-00-596-7693	96906	MS35335-31
138	9	5310-00-934-9757	96906	MS35649-282
138	10	5315-00-616-5514	96906	MS35756-6
138	11	5315-00-815-8840	96906	MS35810-4
138	12	5340-00-985-0823	96906	MS35812-4
138	13	5310-00-975-2075	96906	MS35691-21
138	14	5307-01-195-5949	97403	13214E2468
138	15	5315-00-839-2326	96906	MS24665-281
138	16	5306-00-225-9095	96906	MS90726-40
138	17	5315-00-616-5522	96906	MS35756-12
138	18	3040-01-201-1145	97403	13214E2397
138	19	5310-00-660-3381	96906	MS21083N5
138	20	3040-01-255-1605	19207	12355395
138	21	3120-01-181-1625	97403	13214E2644-1
138	22	5306-00-225-9088	96906	MS90726-33
138	23	5340-01-204-0375	97403	13211E9358
139	1	4310-00-640-3774	90005	569020-01
139	2	4730-00-995-1559	96906	MS51500A6
139	3	4720-01-289-8236	19207	12357157
139	4	4730-00-812-7999	96906	MS51504A6
139	5	4730-00-995-1579	96906	MS51511A6
139	6	4730-01-195-0353	97403	13214E2258
139	7	4730-01-192-4729	81348	WW-P-471BCQBCDB
139	8	4730-01-104-2268	96906	MS51953-25
139	9	5330-00-804-5694	96906	MS28778-16
139	10	5365-01-017-2652	96906	MS51840-30
139	11	5340-00-057-2906	96906	MS21333-73
139	12	5305-00-432-4202	96906	MS51861-46
140	1	5306-01-206-5452	19207	12321896

CROSS-REFERENCE INDEXES

FIGURE AND ITEM NUMBER INDEX

FIG.	ITEM	STOCK NUMBER	CAGEC	PART NUMBER
140	2	5310-00-823-8803	96906	MS27183-21
140	3	5340-01-182-8775	97403	13211E9118
140	4	3120-01-184-4860	97403	13211E9103
140	5		19207	12334986
140	6	5310-00-763-8920	96906	MS51967-20
140	7	5340-01-184-4822	97403	13211E9521
140	8	3120-01-184-4860	97403	13211E9103
140	9		19207	12335005
140	10	5310-00-763-8912	96906	MS51968-26
140	11	5365-01-194-8529	97403	13211E9485
140	12	3120-01-188-5123	77998	DREM-14
140	13	5340-01-184-4839	97403	13211E9450
140	14	3120-01-184-4860	97403	13211E9103
140	15	5310-00-809-8540	96906	MS27183-25
140	16	5306-01-216-6605	19207	12334934
140	17	5306-01-197-2532	96906	MS90728-163L
140	18	2530-01-167-8052	97403	13215E6600
141	1	6680-01-175-5552	19207	12352519
141	2		96906	MS90728-59
141	3	5310-00-637-9541	96906	MS35338-46
141	4	5330-00-770-8123	19207	7708123
141	5	2520-01-183-8482	19207	12352520
141	6	5330-00-845-1521	19207	8350176
141	7	5330-00-514-3289	96906	MS35769-21
141	8	5365-00-737-6357	19207	7376357
141	9	4730-01-185-0472	00736	RSW1302-156
141	10	5330-01-166-1713	97403	13215E6649
141	11	4730-01-158-4081	00736	RSW1302-826
141	12	5340-01-181-6494	97403	13214E2634
141	13	5305-00-725-2317	96906	MS90728-64
142	1	5306-01-219-4131	96906	MS90728-38L
142	2	5310-00-081-4219	96906	MS27183-12
142	3	5306-01-196-3856	96906	MS90728-50L
142	4	5306-01-220-0187	96906	MS90728-49L
142	5	5306-01-219-5400	96906	MS90728-44L
142	6	5306-01-206-5451	96906	MS90728-41L
142	7	5306-00-226-4827	96906	MS90728-34
142	8	5310-00-407-9566	96906	MS35338-45
142	9	5340-01-181-6499	97403	13215E6708
142	10	5330-01-193-8205	97403	13215E6707
142	11	5365-01-197-6366	97403	13215E6598-4
142	12	4820-01-181-6471	97403	13215E6706
142	13	4820-01-053-5141	19207	8352006
142	14	5360-01-194-9423	97403	13215E6704
142	15	3120-01-058-1160	19207	8352005
142	16	4710-01-181-6518	97403	13215E6702
142	17	4820-01-187-0556	97403	13215E6696
142	18	5365-00-913-1208	19207	8349689
142	19	2520-00-840-9434	19207	8348050
142	20	5360-01-194-3176	97403	13215E6711
142	21	3120-00-840-9446	19207	8347311

CROSS-REFERENCE INDEXES

FIGURE AND ITEM NUMBER INDEX

FIG.	ITEM	STOCK NUMBER	CAGEC	PART NUMBER
142	22	5330-01-192-9327	97403	13215E6686
142	23	2530-01-167-8051	97403	13215E6540
143	1	5306-01-134-5721	96906	MS90728-34L
143	2	5310-00-407-9566	96906	MS35338-45
143	3	5340-01-185-5925	97403	13215E6545
143	4	5330-01-185-5840	97403	13215E6544
143	5	5360-01-185-5833	97403	13215E6691
143	6	4820-01-185-5769	97403	13215E6690
143	7	4820-01-185-5770	97403	13215E6692
143	8	5306-01-195-9819	96906	MS90728-46L
143	9	5306-01-206-5451	96906	MS90728-41L
143	10	4730-00-595-1884	97403	13218E0122-11
143	11		97403	13215E6563
143	12	4820-01-185-5765	97403	13215E6548
143	13	5330-00-514-3289	96906	MS35769-21
143	14	5365-00-090-9164	19207	7708979
143	15	4820-01-185-5763	97403	13215E6542
143	16	5360-00-841-6980	19207	8351458
143	17	5330-00-732-1312	19207	8351437
143	18	5340-01-185-0511	19207	8351801
143	19	5340-01-185-5914	97403	13215E6590
143	20	4820-01-185-5764	97403	13215E6543
143	21	2815-01-185-0535	97403	13215E6693
143	22	5360-01-185-5834	97403	13215E6694
143	23	4820-01-185-5847	97403	13215E6695
143	24	4820-01-187-0556	97403	13215E6696
143	25	5365-00-913-1208	19207	8349689
143	26	5330-01-185-5842	97403	13215E6566
143	27		97403	13215E6567
143	28	5330-01-185-5841	97403	13215E6565
143	29	5305-00-253-5615	96906	MS21318-21
143	30		97403	13215E6569
143	31	5315-01-194-5182	19207	12331940
143	32	4820-01-185-5768	97403	13215E6580
143	33		97403	13215E6568
143	34	5315-01-194-5183	19207	12331941
143	35	3120-01-185-5862	97403	13215E6557
143	36	5360-01-185-5835	97403	13215E6551
143	37	3040-01-185-5908	97403	13215E6550
143	38	3120-00-839-2331	19207	8351424
143	39	5365-00-803-7315	96906	MS16624-1043
143	40	5330-00-579-8108	96906	MS28775-111
143	41	3040-01-185-5909	97403	13215E6560
143	42	5315-01-185-0327	19207	12331946
143	43	3120-00-840-9446	19207	8347311
143	44		97403	13215E6725
143	45	5315-00-297-1745	96906	MS171537
143	46	5330-00-292-0570	96906	MS28775-210
143	47	5360-00-839-1626	19207	8351432
143	48	3110-00-887-5524	96906	MS19061-20015
144	1	5330-01-063-8978	96906	MS28775-259

CROSS-REFERENCE INDEXES

FIGURE AND ITEM NUMBER INDEX

FIG.	ITEM	STOCK NUMBER	CAGEC	PART NUMBER
144	2	5330-00-848-9944	19207	8351929
144	3	2520-00-861-1442	19207	8351925
144	4	5305-01-201-3790	97403	13215E6591-2
144	5	3110-00-849-8942	52676	6020J/C3
144	6	5365-01-194-8524	19207	8351572
144	7	5365-00-842-7853	19207	8351583
144	8	3110-00-849-8941	52676	6217J/C3
144	9	5330-00-735-4264	19207	8351676
144	10	5340-01-181-6495	97403	13215E6601
144	11	5310-00-209-0965	96906	MS35338-47
144	12	5305-00-071-1789	96906	MS90728-88
144	13	2520-00-179-7036	19207	8351618
144	14	5330-01-114-9226	96906	MS28775-258
144	15	5330-00-736-6281	19207	8351582
144	16	2520-00-736-3581	19207	8351567
144	17	2520-00-837-1585	19207	8351609
144	18		19207	12379441
144	19	5365-00-073-5130	19207	8351568
144	20	5310-00-844-5652	19207	8351573
144	21		19207	12379444-1
144	21		19207	12379444-2
144	21		19207	12379444-3
144	22	5340-01-181-6496	97403	13215E6602
145	1	4730-00-909-8627	96906	MS35842-13
145	2	9390-01-181-6525	97403	13215E6726
145	3	4730-00-908-6292	96906	MS35842-14
145	4	3040-01-326-7772	19207	12379435
145	5	5330-00-579-3163	96906	MS28775-214
145	6	5365-01-195-6221	97403	13215E6684
145	7	5330-01-181-6441	97403	13215E6729
145	8	5365-01-197-1562	97403	13215E6625-1
145	8	5365-01-197-1563	97403	13215E6625-2
145	8	5365-01-197-1564	97403	13215E6625-3
145	8	5365-01-197-1565	97403	13215E6625-4
145	9	2590-01-187-0362	97403	13215E6669
145	10	5315-01-194-0815	97403	13211E9569
145	11		19207	12332517
145	12	3110-01-222-2459	96906	MS19061-20021
145	13	2520-00-895-6454	19207	8351907
145	14	5330-00-895-6456	19207	8351895
145	15	2530-01-181-6342	97403	13215E6668
145	16		19207	12332518
145	17	5315-00-844-6796	96906	MS16562-39
145	18	5315-01-194-0814	97403	13211E9568
145	19	5305-01-194-2999	97403	13215E6591-3
145	20	5360-01-194-3175	97403	13215E6683
145	21	5340-01-181-6503	97403	13215E6682
145	22	2530-01-181-6341	97403	13215E6664
145	23	5315-01-194-0815	97403	13211E9569
145	24		19207	12332512
145	25	5306-00-839-9088	19207	8675777

CROSS-REFERENCE INDEXES

FIGURE AND ITEM NUMBER INDEX

FIG.	ITEM	STOCK NUMBER	CAGEC	PART NUMBER
145	26	2530-01-181-6340	97403	13215E6663
145	27		19207	12332510
145	28	5315-01-194-0814	97403	13211E9568
145	29	5315-00-844-6796	96906	MS16562-39
146	1	3040-01-181-6531	97403	13215E6676
146	2	4730-01-194-2163	97403	13215E6675-1
146	3	4730-01-194-2164	97403	13215E6675-2
146	4	4730-00-188-3507	96906	MS27769C5
146	5	5305-00-253-5615	96906	MS21318-21
146	6	9905-01-181-6396	97403	13215E6547
146	7	5330-01-193-0204	97403	13215E6689
146	8	5340-01-181-6498	97403	13215E6680
146	9	5310-00-081-4219	96906	MS27183-12
146	10	5306-00-225-8499	96906	MS90725-34
146	11	3110-00-135-7205	60038	42687-42620
146	12	5365-01-196-8095	97403	13215E6624-1
146	12	5365-01-197-1559	97403	13215E6624-2
146	12	5365-01-197-1560	97403	13215E6624-3
146	12	5365-01-197-1561	97403	13215E6624-4
146	13	5306-01-195-5011	19207	7748617
146	14	5365-01-181-6437	97403	13215E6588-6
146	15	5330-01-192-9337	97403	13215E6665-2
146	16	2530-01-167-8053	97403	13215E6697
146	17	5306-01-194-2981	97403	13215E6591-7
146	18	5340-01-181-6500	97403	13215E6698
146	19	3020-01-181-6430	97403	13215E6700
146	20	3020-01-181-6489	19207	7708356
146	21	3040-01-184-4817	97403	13215E6687
146	22	5330-01-193-0185	97403	13215E6713
146	23	4710-01-181-6470	97403	13215E6714
146	24	5330-01-192-9328	97403	13215E6715
146	25	4730-01-181-6454	97403	13215E6716
146	26	5305-01-201-3790	97403	13215E6591-2
146	27	5305-01-194-3000	97403	13215E6591-6
146	28	4730-01-194-2165	97403	13215E6675-3
146	29	4730-00-188-3504	96906	MS27769C2
147	1	5365-01-181-6437	97403	13215E6588-6
147	2	5330-01-192-9337	97403	13215E6665-2
147	3	5306-01-195-5011	19207	7748617
147	4	3040-01-181-6337	97403	13215E6639
147	5	2530-01-187-0361	97403	13215E6549
147	6		19207	12332511
147	7	5365-01-196-8095	97403	13215E6624-1
147	7	5365-01-197-1559	97403	13215E6624-2
147	7	5365-01-197-1560	97403	13215E6624-3
147	7	5365-01-197-1561	97403	13215E6624-4
147	8	3110-00-102-0613	60038	64433-64700
147	9		97403	13215E6666
147	10	5365-01-181-6438	97403	13215E6629
147	11		97404	13215E6628
147	12	5310-01-181-6443	97403	13215E6655

CROSS-REFERENCE INDEXES

FIGURE AND ITEM NUMBER INDEX

FIG.	ITEM	STOCK NUMBER	CAGEC	PART NUMBER
147	13	3040-01-186-3395	97403	13215E6631
147	14	5330-01-180-9913	97403	13215E6618
147	15	5340-01-181-6497	97403	13215E6614
147	16	5310-00-209-0965	96906	MS35338-47
147	17	5305-00-071-2056	96906	MS90728-90
147	18	5330-01-181-6419	80201	31250
147	19	3040-01-181-6528	19207	12325741
147	20	5305-01-195-1592	19207	12332500
147	21		97403	13215E6623
147	22	5310-01-195-5083	97403	13215E6615
147	23	3110-00-866-7252	60038	48190-48120
147	24	3130-01-186-3408	97403	13215E6622
147	25	5365-01-180-9928	97403	13215E6621-1
147	25	5365-01-180-9929	97403	13215E6621-2
147	26	3110-00-100-5499	96906	MS19081-155
147	27		97403	13215E6620
147	28	5330-01-019-2450	96906	MS28775-269
147	29	5365-01-196-6702	97403	13215E6619-1
147	29	5365-01-197-1558	97403	13215E6619-2
147	29	5365-01-198-5543	97403	13215E6619-3
148	1	2520-00-446-2484	13475	8351184
148	2	2520-00-730-6669	19207	8349197
148	3	5315-00-733-8093	19207	8351681
148	4	5305-01-199-4352	19207	12332501
148	5	5360-00-845-1520	19207	8351503
148	6	2520-00-735-4268	19207	8351687
148	7	5365-00-663-1245	96906	MS16632-1031
148	8	3040-01-181-6487	97403	13215E6721
148	9	3110-00-554-2985	19207	7067228
148	10	3040-01-181-6485	97403	13215E6720
148	11	5310-00-841-0273	19207	8351579
148	12	5365-00-844-2913	19207	8348601
148	13	3020-01-181-6334	97403	13215E6630
148	14		19207	8355937
148	15	5315-01-236-1965	19207	12325800
148	16	3040-01-181-6431	19207	8355949
148	17	3120-01-310-2402	97403	13215E6644
148	18	5365-01-181-6477	19207	8357330
148	19	3020-01-181-6473	19207	8351574
148	20	3110-00-822-3822	19207	7709958
148	21	3020-01-185-5913	97403	13215E6667
148	22	2530-00-734-5295	19207	8351587
148	23	5306-00-847-4964	19207	8351646
148	24	5306-01-198-4146	97403	13215E6591-1
148	25	3120-01-181-6439	97403	13215E6651
148	26	3040-01-181-6336	97403	13215E6658
148	27	5315-01-199-2089	97403	13215E6662
148	28	5365-01-210-7628	97403	13215E6659
148	29	5365-01-196-4020	97403	13215E6661
148	30	3040-01-181-6338	97403	13215E6657
148	31	5315-01-189-9769	19207	12332502

CROSS-REFERENCE INDEXES

FIGURE AND ITEM NUMBER INDEX

FIG.	ITEM	STOCK NUMBER	CAGEC	PART NUMBER
148	32		19207	12325818
148	33	2520-00-735-4244	19207	8351603
148	34	5306-00-225-9066	96906	MS90726-31
148	35	2520-00-730-4665	19207	8349783
148	36	5340-01-181-6339	19207	8355952
148	37	2520-00-735-9079	19207	8351584
148	38	5330-01-192-3367	19207	8350405
148	39	5330-01-105-9156	96906	MS28775-271
148	40	3110-00-554-2972	52676	6215
148	41	5365-00-282-7017	19207	7709185
148	42	3040-01-181-6486	97403	13215E6597
148	43	2520-00-735-9097	19207	8349941
148	44	2520-00-736-3578	13475	8351531
148	45	5365-00-842-7854	19207	8351581
148	46	2520-00-936-5335	19207	8351588
148	47	5360-00-843-0141	19207	8351580
148	48	2520-01-187-0360	97403	13215E6599
148	49	5315-01-179-4535	96906	MS51400-190
148	50		19207	12325795
148	51	2805-00-861-1437	19207	8351906
148	52	5330-00-861-1433	19207	8351894
148	53	5330-00-861-1429	19207	8351899
148	54	2805-00-861-1440	19207	8351911
148	55	3040-01-181-6488	97403	13215E6650
148	56	2520-00-735-4245	19207	8351602
148	57	2520-00-692-9242	19207	7709353
148	58	2520-00-861-1441	19207	8351550
148	59	5360-00-841-8409	19207	8351666
148	60	5365-01-181-6413	97403	13215E6613
148	61	2805-00-861-1435	19207	8351909
148	62	5330-00-861-1431	19207	8351897
148	63	5330-01-193-0206	97403	13215E6665-1
148	64	5365-01-181-6436	97403	13215E6588-5
148	65	4730-00-188-3506	96906	MS27769C4
148	66	4730-00-188-3505	96906	MS27769C3
148	67	5310-00-209-0965	96906	MS35338-47
148	68	5305-00-071-2057	96906	MS90728-91
148	69	2520-00-498-3815	19207	8348817
148	70	5305-00-071-2056	96906	MS90728-90
148	71	5305-00-071-2055	96906	MS90728-89
148	72	3040-01-181-6530	97403	13215E6606
148	73	5330-01-192-9326	97403	13215E6626
148	74	5340-01-186-3402	97403	13215E6605
149	1	2520-01-183-6864	77873	4-73527
149	2	2520-01-192-5674	77873	6-8525
149	3	2520-00-871-6772	77873	114-8202A
149	4		77873	27853J
149	5		77873	6D8524
149	6	4730-00-172-0010	77873	9067J
149	7	5310-01-194-9232	77873	26436J
149	8	5330-00-355-2099	77873	2715J

CROSS-REFERENCE INDEXES

FIGURE AND ITEM NUMBER INDEX

FIG.	ITEM	STOCK NUMBER	CAGEC	PART NUMBER
149	9	4730-00-355-2100	77873	3310J
149	10	2520-01-192-5675	77873	32719J
149	11	5305-01-211-7474	96906	MS90727-116L
150	1	4730-00-221-2141	96906	MS20913-8S
150	2	5340-01-182-8773	98441	16MGTX-S
150	3	4730-00-375-6405	96906	MS51860-60
150	4	4720-01-296-2977	19207	12357155
150	5	4730-00-995-1572	96906	MS51508A16-12
150	6	4730-00-995-1559	96906	MS51500A6
150	7	4720-01-289-8235	19207	12357136-2
150	8	4730-01-103-3275	96906	MS51508A6
150	9	4720-01-289-8234	19207	12357159
150	10	4720-01-289-8237	19207	12357160
150	11	4730-01-192-9578	96906	MS51522A16
150	12	5340-00-725-5280	96906	MS21333-125
151	1	5330-01-182-8916	97403	13214E1964
151	2	5310-00-809-4085	96906	MS27183-16
151	3	5306-01-198-4665	96906	MS90728-91L
151	4	2520-01-184-4799	97403	13211E9107
151	5		97403	13211E9107-1
151	6	5330-01-192-9330	97403	13211E9156
151	7	2520-01-182-8774	97403	13211E9102
151	8	2520-01-184-4800	19207	12335326
151	9		19207	12331948
151	10	5315-00-478-0256	96906	MS16555-132
151	11	5330-01-165-1343	96906	MS28775-387
151	12	5365-01-271-1809	19207	12335332
151	13	5330-01-183-6853	97403	13214E2455
151	14	3040-01-183-8450	97403	13211E9109
151	15	5306-01-196-6740	96906	MS90728-169L
151	16	5310-00-585-3243	96906	MS9320-16
151	17	2520-01-184-4821	97403	13211E9105
151	18	2520-01-184-4800	19207	12335326
151	19		19207	12331906
151	20	5315-00-478-0256	96906	MS16555-132
151	21	3040-01-183-6876	97403	13211E9108
152	1	2520-01-154-9993	97403	13211E8700
152	2	5340-01-178-6107	97403	13214E2107-3
152	3	5306-01-114-0963	96906	MS90728-60L
152	4	5340-01-176-7491	97403	13214E2107-1
152	5	3040-01-179-1410	97403	13211E8708
152	6	3110-00-289-6748	60038	27690/27620
152	7	3020-01-177-5394	97403	13211E8711
152	8	3040-01-171-0143	97403	13211E8701
152	9	4730-01-179-2489	97403	13214E1993
152	10	4730-00-968-6129	96906	MS49006-10
152	11		19207	12369120
152	12	3020-01-201-4031	97403	13211E8703
152	13	3020-01-179-8072	97403	13211E8710
152	14	5365-00-943-5352	81349	M27426-31728
152	15	3020-01-179-1030	97403	13211E8707

CROSS-REFERENCE INDEXES

FIGURE AND ITEM NUMBER INDEX

FIG.	ITEM	STOCK NUMBER	CAGEC	PART NUMBER
152	16	3040-01-176-1210	97403	13211E8705
152	17	5306-01-205-2801	96906	MS90728-57L
152	18	5340-01-178-6108	97403	13214E2129
152	19	2520-01-222-7588	97403	13211E8717
152	20	2520-01-193-6742	97403	13211E8714
152	21	5315-01-177-9865	97403	13214E2119
152	22	3040-01-171-8272	97403	13211E8713
152	23	3110-00-227-4682	60038	48393/48320
152	24	3040-01-171-0142	97403	13211E8702
152	25	5340-01-177-1050	97403	13214E2107-2
152	26	5310-01-176-4000	97403	13214E2106
152	27	3110-00-926-4604	08162	MCJ5309
152	28	3020-01-176-6614	97403	13211E8704
152	29	3040-01-222-7586	97403	13214E2109
152	30	5310-00-184-8992	96906	MS9320-14
152	31	5306-01-197-3556	96906	MS90728-127L
152	32	3110-00-989-0739	60038	48385/48320
152	33	5365-01-245-4119	97403	13214E2817-2
152	33	5365-01-245-4120	97403	13214E2817-3
152	33	5365-01-246-3914	97403	13214E2817-1
152	34	5310-01-243-9437	97403	13211E8712
152	35	5330-00-882-5029	96906	MS28775-263
152	36	5330-01-178-9325	97403	13204E2499
152	37	5310-00-080-6004	96906	MS27183-14
152	38	5306-01-114-0963	96906	MS90728-60L
152	39	5330-01-169-2461	80201	872-80-4450
152	40	2520-01-169-2421	97403	13211E8706
152	41	5306-01-179-9462	97403	13204E3398
152	42		19207	12325794
152	43	5330-00-292-0570	96906	MS28775-210
152	44	5310-00-953-8703	96906	MS9320-17
152	45	5306-01-177-5878	97403	13211E8718
152	46	5306-01-185-0170	97403	13211E8718-2
152	47		97403	13211E8718-1
153	1	3020-01-219-7561	19207	12332556
153	2	3040-01-219-7618	19207	12332555
153	3	5310-01-204-6862	97403	13204E2730-2
153	4		96906	MS35764-1519
153	5	3020-01-156-6212	97403	13211E9213
153	6	5310-01-183-6841	72962	52NE2120120
154	1	2530-01-167-8106	97403	13211E9207
154	2	5306-00-226-4825	96906	MS90728-32
154	3	5310-00-407-9566	96906	MS35338-45
154	4		19207	12334969
154	5	4320-01-184-1897	19207	12334968
154	6	5310-01-166-2617	97403	13204E2730-1
154	7	5310-01-183-6841	72962	52NE2120120
155	1	2530-01-226-0555	19207	12352500-2
155	2	2530-01-234-1917	19207	12352500-1
155	3		97403	13211E9225
155	4		97403	13204E2680

CROSS-REFERENCE INDEXES

FIGURE AND ITEM NUMBER INDEX

FIG.	ITEM	STOCK NUMBER	CAGEC	PART NUMBER
155	5	5310-01-166-2617	97403	13204E2730-1
155	6	5310-01-183-6841	72962	52NE2120120
155	7		72962	52NE2120120
155	8	5310-01-112-6120	88044	AN960XC1216L
155	9	5315-01-156-6208	97403	13211E9226
156	1	5306-01-175-7558	96906	MS90728-6L
156	2	5310-00-809-4058	96906	MS27183-10
156	3	5340-01-183-8353	19207	12334929
156	4	5310-00-080-6004	96906	MS27183-14
156	5	5306-01-112-8681	96906	MS90728-62L
156	6	5935-00-807-4109	19207	8741492
156	7	5935-00-900-6281	96906	MS27147-1
156	8	6150-01-183-8380	19207	12325762
156	9	5340-00-150-1658	17773	11176106-5
156	10	5305-00-446-9901	96906	MS51850-64
156	11	4240-00-007-9453	81361	B5-19-1829
156	12	5365-00-514-0393	96906	MS16624-4087
156	13	5340-00-595-5208	81361	B5-19-1831
156	14	6150-01-201-1008	19207	12352523
156	15	4240-00-565-6059	81361	D5-19-1754
156	16	4720-00-060-2732	81361	C5-19-876-1
156	17	4730-00-908-3194	96906	MS35842-11
156	18	4730-00-808-5089	81361	B5-19-1676-2
156	19	4720-00-004-8249	81361	C5-19-1893-30
156	20	5306-01-112-4341	96906	MS90728-5L
156	21	6150-01-005-4773	81361	B5-19-1663
156	22	5340-00-080-9853	96906	MS21333-97
156	23	5306-01-113-0525	96906	MS90728-3L
156	24	5340-00-088-1255	96906	MS21333-96
156	25	1015-01-027-0980	81361	C5-19-1757
156	26	5340-01-183-8352	19207	12334829
156	27	5305-00-958-5247	96906	MS35190-291
156	28	6150-01-032-4556	81361	B5-19-1768
157	1	4540-00-807-6856	81361	E5-19-1782
157	2	4730-01-195-8513	99017	P88
157	3	5935-00-572-9180	19207	8338566
157	4	5310-00-833-8567	19207	8338567
157	5	5999-00-057-2929	96906	MS27148-2
157	6	5940-00-399-6676	19207	8338564
157	7	5970-00-833-8562	19207	8338562
157	8	5935-00-833-8561	19207	8338561
157	9	9905-00-752-4649	96906	MS39020-1
157	10		81349	M13486/1-5AR
157	11	5935-00-399-6673	19207	7982401
157	12	9905-01-295-8898	34228	885F052005
157	13	6210-00-578-7970	19207	7000296
158	1	4240-00-868-7906	81361	D5-19-1772
158	2	4240-00-763-2465	81361	C5-19-1827
158	3	4240-00-018-3079	81361	C5-19-1773
158	4	4240-00-289-7978	81361	C5-19-2267
158	5	4240-00-368-6291	81361	C5-19-853

CROSS-REFERENCE INDEXES

FIGURE AND ITEM NUMBER INDEX

FIG.	ITEM	STOCK NUMBER	CAGEC	PART NUMBER
158	6	5340-00-806-0022	81361	C5-19-1662
158	7	5310-00-045-3299	96906	MS35338-42
158	8	5305-00-984-6195	96906	MS35206-247
159	1	9905-01-181-6397	19207	12334909
159	2	5310-00-225-6993	96906	MS51922-33
159	3	5310-00-809-5998	96906	MS27183-18
159	4	5306-01-112-4341	96906	MS90728-5L
159	5	5340-00-984-8540	96906	MS21333-102
159	6	5340-01-254-6544	19207	12357213-1
159	7	5306-01-194-4974	96906	MS90728-111L
159	8	5306-01-200-6257	96906	MS90728-115L
159	9	2590-01-252-0285	19207	12357212
159	10	5340-01-254-6545	19207	12357213-2
159	11	5305-00-071-2071	96906	MS90728-115
159	12	2540-01-298-3982	19207	12367590
159	13	5305-00-052-6920	96906	MS24629-56
159	14	5340-00-809-1492	96906	MS21333-100
159	15	5305-00-145-8367	96906	MS51850-85
159	16	5340-00-984-8541	96906	MS21333-106
159	17	5325-00-276-6098	96906	MS35489-78
159	18	5305-00-984-6210	96906	MS35206-263
159	19	5310-00-596-7691	96906	MS35335-32
159	20	5995-01-183-8398	19207	12335091
159	21	5325-00-174-9325	96906	MS35489-107
159	22	5305-01-134-5726	96906	MS16997-31L
159	23	6150-01-254-6577	19207	12357230
160	1	5940-00-705-6715	19207	7056715
160	2		81349	M23053/5-108-0AR
160	3	9905-00-752-4649	81349	M43436/1-1
160	4		81349	M13486/1-9AR
160	5		81349	M13486/1-5AR
160	6	5935-00-833-8561	19207	8338561
160	7	5970-00-833-8562	19207	8338562
160	8	5940-00-399-6676	19207	8338564
160	9	9905-00-893-3570	81349	M43436/1-3
160	10	5940-00-800-7470	19207	7056712
160	11	5935-00-333-9414	19207	7723308
160	12	5325-00-338-1274	19207	7524564
160	13	5935-00-201-6673	19207	7722352
161	1	5310-00-518-5680	96906	MS17829-5F
161	2	2540-01-178-7083	97403	13214E2073
161	3	5340-01-180-6681	97403	13214E2069
161	4	5306-00-225-9088	96906	MS90726-33
161	5	5310-00-483-8791	96906	MS17829-4F
161	6	5310-00-809-4058	96906	MS27183-10
161	7	2540-01-178-5401	19207	12334775
161	8	2590-01-178-3142	97403	13214E2070
161	9	2540-01-171-0136	09704	133166
161	10	2540-01-193-6783	09704	130124
161	11	2540-01-193-6778	09704	130063
161	12	2540-01-206-3878	09704	101286

CROSS-REFERENCE INDEXES

FIGURE AND ITEM NUMBER INDEX

FIG.	ITEM	STOCK NUMBER	CAGEC	PART NUMBER
161	13	5305-00-914-6133	96906	MS18153-88
161	14	2540-01-147-9977	19207	12300495
161	15	5310-00-809-4085	96906	MS27183-16
161	16	5310-00-245-3421	96906	MS17829-7F
161	17	5306-00-225-8499	96906	MS90725-34
161	18	2540-01-212-2466	19207	12332471
161	19	5310-00-081-4219	96906	MS27183-12
161	20	5310-00-245-3424	96906	MS17829-5C
161	21	5305-00-710-4205	96906	MS90726-99
161	22	5355-01-181-6415	72512	55M
161	23	5340-01-232-3913	97403	13211E8970
161	24	5315-00-005-0442	96906	MS24665-285
161	25	5310-00-809-5998	96906	MS27183-18
161	26	5365-00-803-7301	96906	MS16624-1050
161	27	3110-01-170-9948	97403	13214E2074
161	28	5315-01-181-1687	97403	13214E2072
161	29	5360-01-178-2192	97403	13214E2068
161	30	5315-01-007-8299	96906	MS171534
161	31	2540-01-215-6649	19207	12335459
161	32	5360-01-186-1129	80545	N3508
161	33	5306-01-114-0963	96906	MS90728-60L
161	34	5310-00-080-6004	96906	MS27183-14
161	35	5305-00-988-3785	96906	MS35191-291
161	36	5315-00-957-8756	96906	MS20392-7C87
161	37	2540-01-178-7116	97403	13214E2067
161	38	5306-01-113-0525	96906	MS90728-31L
161	39	5340-01-180-6698	97403	13214E2071
161	40	2540-01-178-5402	19207	12334776
162	1	2540-01-181-6349	19207	12334851
162	2	5310-00-080-6004	96906	MS27183-14
162	3	5306-01-112-8682	96906	MS90728-59L
162	4	2510-01-181-6350	19207	12334852
162	5	5315-01-181-6409	19207	12334859
162	6	5360-01-213-8857	96906	MS24585-1363
162	7	5315-01-135-0181	96906	MS171592
162	8	2540-01-216-7048	19207	12325730
162	9		19207	12334860
162	10	5310-00-087-4652	96906	MS51922-17
162	11	5305-00-068-0510	96906	MS90728-60
162	12	5310-01-195-5095	19207	12334863
162	13	2540-01-216-7046	19207	12355538
162	14	5340-01-217-1073	19207	12357199
162	15	5305-00-068-0511	96906	MS90728-62
162	16	2510-01-184-4818	19207	12334854
162	17	5305-01-197-1368	96906	MS24667-52L
162	18	5340-01-245-2494	19207	12357221
162	19	5340-01-216-7047	19207	12355301
162	20	2540-01-255-5992	19207	12352563
162	21	2510-01-245-2446	19207	12357244
162	22		19207	12352561
162	23	9535-01-181-6344	19207	12357200

CROSS-REFERENCE INDEXES

FIGURE AND ITEM NUMBER INDEX

FIG.	ITEM	STOCK NUMBER	CAGEC	PART NUMBER
162	24	5340-01-217-1074	19207	12357198
163	1	5340-01-250-5688	19207	12357273
163	2	5310-00-637-9541	96906	MS35338-46
163	3	5305-00-543-4372	96906	MS90728-58
163	4	5340-00-543-3155	19207	8690476
163	5	5340-01-134-3719	19207	8690490
163	6	5340-00-479-2947	19207	8690485
163	7	5306-01-113-0525	96906	MS90728-31L
163	8	7690-01-251-8273	19207	12357349
163	9	5305-00-068-0508	96906	MS90728-6
163	10	5310-00-809-4058	96906	MS27183-10
163	11	2590-01-245-2447	19207	10901079
163	12	7690-01-248-4618	19207	12357347
163	13	7690-01-248-4619	19207	12357348
163	14	5305-00-724-7254	96906	MS90728-172
163	15	5310-00-951-7209	96906	MS27183-22
163	16	5310-00-269-4040	96906	MS51922-49
163	17	5306-01-112-4340	96906	MS90728-58L
163	18	5340-01-286-9808	19207	12357376
163	19	5340-01-286-9807	19207	12357375
163	20	5340-00-764-2334	96906	MS51939-1
163	21	5310-00-045-3296	96906	MS35338-43
163	22	5305-00-984-6208	96906	MS35206-261
164	1	5305-00-941-9426	96906	MS51975-32
164	2	5310-00-809-5998	96906	MS27183-18
164	3	3120-00-763-8930	96906	MS17796-63
164	4	5310-00-080-6004	96906	MS27183-14
164	5	5310-00-087-4652	96906	MS51922-17
164	6	5305-00-942-2196	96906	MS18154-60
164	7	5310-00-637-9541	96906	MS35338-46
164	8	2510-01-254-6512	19207	12357263
164	9	5310-00-809-4058	96906	MS27183-10
164	10	5310-00-582-5965	02614	N405P41B6
164	11	5305-00-071-2505	96906	MS90728-7
164	12	2540-01-254-6574	19207	12357266
165	1	2540-01-254-6575	19207	12357265
165	2	5306-01-194-4974	96906	MS90728-111L
165	3	5310-00-809-5998	96906	MS27183-18
165	4	3010-01-252-9796	19207	12357341
165	5	7690-01-252-9419	19207	12357345
165	6	5310-00-809-4058	96906	MS27183-10
165	7	5305-00-068-0515	96906	MS90727-8
165	8	7690-01-248-4615	19207	12357344
165	9	5340-01-271-0936	19207	12357264
165	10	5310-00-877-5796	96906	MS21044N4
165	11	5340-01-138-4994	81349	M24066/2-324
165	12	5305-01-075-7066	96906	MS51851-13
165	13	9530-01-311-1587	19207	12357193
165	14	7690-01-248-4617	19207	12357350
165	15	7690-01-248-4614	19207	12357338
165	16	5310-00-934-9758	96906	MS35649-202

CROSS-REFERENCE INDEXES

FIGURE AND ITEM NUMBER INDEX

FIG.	ITEM	STOCK NUMBER	CAGEC	PART NUMBER
165	17	5310-00-045-3296	96906	MS35338-43
165	18	4030-00-946-8497	96906	MS87006-23
165	19	5340-01-216-5567	19207	12334724-1
165	20	5310-00-014-5850	96906	MS27183-42
165	21	5305-00-052-6915	96906	MS24629-44
165	22	2540-01-312-8366	19207	12369103
165	23	5305-00-995-3444	96906	MS35207-266
165	24	5310-00-081-4219	96906	MS27183-12
165	25	5310-00-839-9269	96906	MS9549-11
165	26	5315-00-839-2325	96906	MS24665-132
165	27	7690-01-248-4616	19207	12357346
165	28	5340-01-256-0981	19207	12357269
166	1	4810-01-154-9991	97403	13204E2560
166	2	5306-01-016-8296	96906	MS35764-1521
166	3	4810-01-154-9992	97403	13204E2561
167	1	5365-01-200-1519	19207	12335054-2
167	2	5330-00-805-2966	96906	MS28778-4
167	3	5330-00-808-0794	96906	MS28778-8
167	4	5365-01-228-0730	19207	12335054-5
167	5	5365-01-184-1917	19207	12335135
167	6	5330-00-251-8839	96906	MS28778-12
167	7	5330-01-188-5125	19207	12335136
167	8	5330-00-252-6888	16954	691-10014
167	9	5330-00-472-2783	96906	MS28778-14
167	10	5365-01-185-0337	97403	13214E2559
168	1	5365-01-242-4564	19207	12335054-4
168	2	5330-00-804-5695	96906	MS28778-6
168	3	5365-01-228-0730	19207	12335054-5
168	4	5330-00-808-0794	96906	MS28778-8
169	1		02697	2-015N552-90
169	2	4820-01-184-1893	19207	12335138
169	3	4820-01-184-1892	19207	12335139
169	4	5360-01-226-9204	19207	12335141
169	5	5330-00-285-9842	96906	MS28778-10
169	6	5365-01-184-1916	19207	12335140
169	7	5305-00-724-7209	96906	MS51963-153
169	8		19207	12335161
169	9		02697	2-266N552-90
169	10		19207	12335159
169	11		19207	12335158
169	12		19207	12335157
169	13	5365-01-183-2754	19207	12335162-1
169	14	5365-01-183-2755	19207	12335162-2
169	15	5365-01-183-2772	19207	12335143
169	16	5306-01-195-3254	81349	M24240/3-20812
169	17	5305-00-900-4614	96906	MS24667-51
169	18	5315-01-183-2786	19207	12335150
169	19	5340-01-183-6829	19207	12335149
169	20	5330-00-582-2855	96906	MS28775-113
169	21	2530-01-183-6827	19207	12335145
169	22		19207	12335147

CROSS-REFERENCE INDEXES

FIGURE AND ITEM NUMBER INDEX

FIG.	ITEM	STOCK NUMBER	CAGEC	PART NUMBER
169	23	3040-01-183-8481	19207	12335146
169	24	5305-01-193-4083	19207	12335148
169	25	5315-00-844-3662	96906	MS16562-62
169	26	9905-01-183-2689	19207	12335142
169	27		75370	82732
169	28	2530-01-184-1895	19207	12335153
169	29	5365-01-184-1955	19207	12335163
169	30	5330-00-882-4963	96906	MS28775-149
169	31		19207	12335164
169	32	3040-01-183-8486	19207	12335144
169	33	4730-01-183-8360	19207	12335151
169	34	5305-00-983-7450	96906	MS16998-76
169	35	5305-00-724-5832	96906	MS51965-92
169	36	2530-01-184-1894	19207	12335154
169	37	3120-01-183-2725	26124	SX2151-076
169	38		19207	12335154-1
170	1	5340-01-183-6836	19207	12335172
170	2	5330-00-285-9842	96906	MS28778-10
170	3	5310-01-229-8042	19207	12335173-1
170	4	5310-01-229-8043	19207	12335173-2
170	5	4820-01-184-1922	19207	12335171
170	6		02697	2-113N552-90
170	7	5330-00-543-7085	96906	MS28774-113
170	8	5330-00-805-2966	96906	MS28778-4
170	9	5365-01-200-1519	19207	12335054-2
170	10	4820-01-217-3305	91816	RV57-11
170	11	5330-00-251-8839	96906	MS28778-12
170	12	5330-00-582-2113	96906	MS28774-111
170	13		02697	2-111N552-90
170	14	4730-01-184-1887	19207	12335168
170	15	3120-01-183-2725	26124	SX2151-076
170	16		19207	12351768-1
170	17	4820-01-183-6908	19207	12335178
170	18	5330-00-630-5958	97820	S11248-112
170	19	5330-00-599-2934	96906	MS28775-112
170	20	5330-00-584-0265	96906	MS28775-012
170	21	5330-00-543-7090	96906	MS28774-012
170	22	4820-01-184-1890	19207	12335175
170	23		02697	2-024N552-90
170	24	4820-01-183-6907	19207	12335177
170	25	5365-01-184-1915	19207	12335180
170	26	5330-00-808-0794	96906	MS28778-8
170	27	4820-01-184-1889	19207	12335174
170	28	5330-00-801-3440	96906	MS28774-115
170	29	5330-00-579-7916	96906	MS28775-115
170	30	4820-01-184-1888	19207	12335181
170	31	4820-01-183-8362	19207	12335183
170	32	5360-01-226-9202	19207	12335184
170	33	5305-01-184-1913	19207	12335182
170	34	5330-00-803-7208	96906	MS28778-2
170	35	5365-01-229-2090	19207	12335054-1

CROSS-REFERENCE INDEXES

FIGURE AND ITEM NUMBER INDEX

FIG.	ITEM	STOCK NUMBER	CAGEC	PART NUMBER
170	36	5330-00-804-5695	96906	MS28778-6
170	37	5365-01-242-4564	19207	12335054-4
170	38	5330-00-835-7485	96906	MS28778-3
170	39	5365-01-230-5909	19207	12335054-3
170	40	5365-01-184-1914	19207	12335179
171	1	5330-00-808-0794	96906	MS28778-8
171	2	5365-01-228-0730	19207	12335054-5
171	3	5330-00-251-8839	96906	MS28778-12
171	4	5365-01-228-0731	19207	12335054-6
171	5	5365-01-242-4564	19207	12335054-4
171	6	5330-00-804-5695	96906	MS28778-6
172	1	5306-01-195-3254	81349	M24240/3-20812
172	2	5365-01-183-2772	19207	12335143
172	3	9905-01-183-2689	19207	12335142
172	4	2530-01-184-1856	19207	12335190
172	5		19207	12335190-1
172	6	3120-01-183-2725	26124	SX2151-076
172	7		19207	12335161
172	8		02697	2-266N552-90
172	9		19207	12335159
172	10		19207	12335158
172	11		19207	12335157
172	12	5365-01-183-2754	19207	12335162-1
172	13	5365-01-183-2755	19207	12335162-2
172	14		75370	B2732
172	15	2530-01-184-1855	19207	12335153
172	16	5365-01-184-1955	19207	12335163
172	17	5330-00-882-4963	96906	MS28775-149
172	18		19207	12335164
172	19	3040-01-183-8486	19207	12335144
172	20	5305-00-724-5832	96906	MS51965-92
172	21	2530-01-184-1894	19207	12335154
172	22		19207	12335154-1
172	23	3120-01-183-2725	26124	SX2151-076
172	24	5330-00-582-2855	96906	MS28775-113
172	25	5340-01-185-0435	19207	12335191
173	1	5330-00-472-2783	96906	MS28778-14
173	2	5305-01-183-8422	97403	13214E2562
173	3		96906	MS20995F91AR
173	4	2530-01-169-3705	26337	800107
173	5		26337	400323
173	6	7690-01-190-5184	26337	552384
173	7	9905-01-187-8429	26337	300716
173	8		26337	600284
173	9	1650-00-222-4525	96906	MS20813-1
173	10	4820-00-535-6483	96906	MS28889-2
173	11	5310-00-145-1650	88044	AN924-10
173	12	5365-01-223-6853	26337	400328
173	13	3040-01-192-9797	26337	400324
173	14		26337	302511
173	15		26337	305112

CROSS-REFERENCE INDEXES

FIGURE AND ITEM NUMBER INDEX

FIG.	ITEM	STOCK NUMBER	CAGEC	PART NUMBER
173	16		26337	400325
174	1		25119	25004750
174	2		19207	12335160
174	3		96906	MS28775-427
174	4	5330-01-183-8359	19207	12334788
174	5	2530-01-183-8358	19207	12335056
174	6	5306-01-195-5809	96906	MS21098-76
174	7	2530-01-169-0033	97403	13211E9217
175	1	3110-00-100-5937	96906	MS19081-86
175	2	5310-01-216-3677	97403	13211E9224
175	3	5315-00-043-1782	96906	MS24665-501
175	4	5330-01-183-6839	97403	13211E9231
175	5	2530-01-183-6905	97403	13214E2114
175	6	5310-00-080-6004	96906	MS27183-14
175	7	5306-01-205-2799	96906	MS90728-61L
175	8	4730-00-050-4208	96906	MS15003-1
175	9	3040-01-183-6891	97403	13211E9222
175	10	5306-01-197-6594	97403	13211E9223
175	11		51829	B32-80-7607
175	12	3110-00-227-2559	96906	MS19081-105
175	13	2530-01-155-0134	97403	13211E9220
175	14	4730-00-273-6714	81348	WW-F-471ACABCF
175	15		19207	12325801
175	16	4820-01-070-7670	96906	MS35670-3A
176	1	5315-01-180-8641	97403	13211E8634
176	2	5305-00-269-3225	96906	MS90725-75
176	3	5310-00-080-6004	96906	MS27183-14
176	4	5310-00-483-8790	96906	MS17829-6C
176	5	5305-00-964-0503	96906	MS90728-78
177	1	3040-01-183-8357	19207	12325842
177	2		96906	MS28775-336
177	3		96906	MS28782-39
177	4		19207	AFN
177	5		19207	12335304-1
177	6		19207	12335305-2
177	7		19207	12335044-2
177	8		19207	12335303-2
177	9		96906	MS28775-121
177	10	4730-00-172-0034	96906	MS15003-6
177	11	3120-00-684-5725	60380	15SF24
177	12	4730-00-018-9566	81348	WW-F-471ACABCA
177	13		19207	12335305-4
177	14		06085	12369135-2
177	15		06085	12369134-2
177	16	2530-01-203-9889	57733	330670
177	17	5305-00-940-9457	96906	MS51045-49
178	1	2540-01-183-6823	97403	13214E2768
178	2	5340-01-183-8470	97403	13214E2771
178	3	5310-00-823-8803	96906	MS27183-21
178	4	5305-00-727-2283	96906	MS90727-162
178	5	5306-00-225-9088	96906	MS90726-33

CROSS-REFERENCE INDEXES

FIGURE AND ITEM NUMBER INDEX

FIG.	ITEM	STOCK NUMBER	CAGEC	PART NUMBER
178	6	5310-00-081-4219	96906	MS27183-12
178	7	5315-01-183-6832	97403	13214E2793
178	8	5365-01-183-2750	97403	13214E2769-1
178	9	5365-01-183-2751	97403	13214E2769-2
178	10	5365-01-183-2752	97403	13214E2769-3
178	11	5365-01-183-2753	97403	13214E2769-4
178	12	5365-01-184-1947	97403	13214E2770
178	13		97403	13214E2772
178	14	5315-00-839-5822	96906	MS24665-353
178	15	5310-00-823-8803	96906	MS27183-21
178	16	3040-01-183-8356	97403	13214E2773
178	17	5315-01-196-6783	97403	13211E9255
178	18	2540-01-183-8355	97403	13214E2775
178	19	5315-01-197-6264	97403	13211E9256
178	20	2590-01-183-6865	19207	12325845
179	1		96906	MS28775-218
179	2		96906	MS28782-23
179	3		19207	NFA-1
179	4		19207	12335044-1
179	5		19207	1233530-1
179	6		96906	MS28775-017
179	7	5305-00-931-2247	96906	MS51045-40
179	8		19207	12335305-1
179	9		06085	12369135-1
179	10		96906	MS28775-025
180	1	5305-00-719-5235	96906	MS90727-114
180	2	5310-00-584-5272	96906	MS35338-48
180	3	5310-00-809-5998	96906	MS27183-18
180	4	5305-00-054-9273	96906	MS51955-38
180	5	5310-00-732-0558	96906	MS51967-8
180	6	2990-01-163-8009	06970	580-404-048
180	7	5305-00-068-0510	96906	MS90728-60
180	8	5310-00-637-9541	96906	MS35338-46
180	9	5305-00-940-8068	96906	MS90728-234
180	10	5310-00-584-7889	96906	MS35338-53
180	11	4720-01-296-2976	19207	12357142
180	12	4730-00-803-5765	96906	MS51504A6-2
180	13	5310-00-975-2075	96906	MS35691-21
180	14	5365-01-181-6330	97403	13214E2919
181	1	2520-01-201-7876	97403	13214E2920
181	2	3040-01-201-1146	97403	13214E2924
181	3	5355-00-401-5294	45320	41404
181	4	3040-01-201-1147	97403	13214E2931
181	5	5360-01-309-5091	97403	13214E2932
181	6	5305-00-269-3238	96906	MS90727-62
181	7	5310-00-080-6004	96906	MS27183-14
181	8	5310-00-975-2075	96906	MS35691-21
181	9	9905-01-184-4833	97403	13214E2929
181	10	3040-01-186-7895	97403	13214E2927
181	11	4730-00-050-4203	96906	MS15001-1
181	12	3040-01-212-2498	97403	13214E2923

CROSS-REFERENCE INDEXES

FIGURE AND ITEM NUMBER INDEX

FIG.	ITEM	STOCK NUMBER	CAGEC	PART NUMBER
181	13	5340-01-194-5125	97403	13214E2926
181	14	5315-01-194-0813	97403	13214E2922
181	15	5315-01-197-6465	97403	13214E2925
181	16	2520-01-186-7894	97403	13214E2928
181	17	5315-00-844-3664	96906	MS16562-67
182	1	2590-01-158-4062	97403	13214E2910
182	2	5305-00-942-2196	96906	MS18154-60
182	3	5310-00-637-9541	96906	MS35338-46
182	4	5340-01-193-6687	97403	13214E2918
182	5	5310-00-732-0558	96906	MS51967-8
182	6	3950-01-189-6478	97403	13215E2332
182	7		19207	12334996
182	8	5330-01-209-7295	19207	12334997
182	9	5330-01-043-7758	96906	MS28775-264
182	10	3040-01-179-1412	97403	13215E2335
182	11	5310-00-407-9566	96906	MS35338-45
182	12	5306-00-226-4830	96906	MS90728-37
182	13	5330-01-165-1372	97403	13215E2334
182	14	4730-00-289-5176	81348	NN-F-471A(ABUD
182	15	3020-01-179-1253	97403	13215E2341
182	16	5315-00-729-6987	96906	MS20066-227
182	17	5305-00-068-0511	96906	MS90728-62
182	18	4320-01-186-3334	64294	MC3F1A19D158
182	19	5365-00-530-7968	96906	MS16624-1100
182	20	3110-00-580-5589	08162	MU1207DAL
182	21	3020-01-179-1252	97403	13215E2343
182	22	5315-00-835-1240	96906	MS16562-30
182	23	3010-01-189-6460	97403	13214E2908
182	24	5310-00-637-9541	96906	MS35338-46
182	25	5305-00-942-2196	96906	MS18154-60
182	26	5305-00-115-9526	96906	MS18154-58
182	27	2540-01-189-6472	97403	13211E9573
182	28	4030-01-209-7476	97403	13211E9571
182	29	4010-01-189-6455	97403	13215E2359
182	30	5365-01-069-9183	19207	10915155
182	31	5330-00-579-6860	96906	MS28775-242
182	32	5340-01-189-6487	97403	13214E2909
182	33	5330-00-599-2934	96906	MS28775-112
182	34	2530-01-189-6400	97403	13214E2916
182	35	5310-00-582-5965	02614	N405P41B6
182	36	5305-00-071-2237	96906	MS90725-14
182	37	5306-01-189-6462	97403	13214E2907
182	38	5315-00-839-2325	96906	MS24665-132
182	39	5310-00-809-4058	96906	MS27183-10
182	40	5315-00-081-7876	96906	MS20392-3C27
182	41	3040-01-189-6501	97403	13214E2917
182	42	5315-00-005-0442	96906	MS24665-285
182	43	5315-00-957-0764	96906	MS20392-5C55
182	44	2590-01-179-1055	97403	13215E2337
182	45	3110-00-227-4788	96906	MS17133-24
182	46	5365-00-854-6720	96906	MS16625-1800

CROSS-REFERENCE INDEXES

FIGURE AND ITEM NUMBER INDEX

FIG.	ITEM	STOCK NUMBER	CAGEC	PART NUMBER
182	47	5305-00-983-8074	96906	MS16998-96
182	48	3040-01-179-1411	97403	13215E2358
182	49	5365-00-878-7692	19207	10908649
182	50	5330-01-215-0114	73680	21093-4505
182	51		97403	13215E2339
182	52	3040-01-201-0966	97403	13215E2355
182	53	5310-01-069-7368	19207	10908648
182	54	2590-00-229-5696	19204	10908580
182	55	5310-01-057-4995	19207	10908642
182	56	3040-01-201-0965	97403	13214E2903
182	57	3020-01-207-1152	97403	13214E2906
182	58	5310-00-878-7691	19207	10908650
182	59	2590-01-179-1047	97403	13215E2346
182	60	3040-01-201-0967	97403	13214E2912
182	61	3110-00-274-4958	43334	R6
182	62	5365-00-804-9739	96906	MS16625-1087
182	63	3120-00-851-8179	19207	10904944
182	64	5310-00-842-1488	96906	MS35692-21
182	65	2590-01-179-1056	97403	13215E2336
182	66	5315-00-005-0442	96906	MS24665-285
183	1	5305-01-269-7504	64294	29531-57
183	2	2590-01-179-1052	64294	33794
183	3		64294	33795-1
183	4	5330-00-702-3413	64294	27451
183	5		64294	29771-034
183	6	5365-01-179-1264	64294	29656-10
183	7	3110-01-179-1159	64294	21496
183	8	2590-01-226-0722	64294	33780-11
183	9	2590-01-226-0545	64294	38248-12
183	10	3110-01-179-1164	64294	27887
183	11		64294	38249-3
183	12	5305-00-155-5075	64294	29549-4
183	13	9905-01-193-1237	64294	41693
183	14		64294	48307-3
183	15	5315-01-185-8519	64294	17086-35
183	16	2815-01-297-5634	64294	45179-4
183	17	2590-01-179-1051	64294	33798
183	18	3110-01-179-1162	64294	33263
183	19	2590-01-179-1053	64294	33799-1
183	20	2590-01-179-1054	64294	38933-11
183	21	3110-01-179-1165	64294	34903
183	22		64294	38947-6
183	23	5315-01-179-1202	64294	19212-8
183	24	5365-01-179-1265	64294	29657-87
183	25	5310-01-179-1284	64294	36906
183	26	5305-01-179-1258	64294	151-36907
183	27		64294	49392
183	28		64294	49391-1
183	29	5305-01-179-1302	64294	29531-100
183	30		64294	29602-130
183	31	4810-01-267-8702	64294	33797-1

CROSS-REFERENCE INDEXES

FIGURE AND ITEM NUMBER INDEX

FIG.	ITEM	STOCK NUMBER	CAGEC	PART NUMBER
183	32	5340-01-179-1358	64294	33801
183	33	5360-01-179-1217	64294	33796
184	1	3040-01-207-9627	97403	13215E2357
184	2		19207	10908629
184	3	5365-01-069-9183	19207	10915155
184	4	2520-01-069-7396	19207	10908631
184	5	5310-00-882-7121	19207	10908633
184	6	3020-00-887-8917	19207	10908632
184	7	3110-00-180-7117	96906	MS19065-30
184	8	5365-00-878-7694	19207	10908634
184	9	5305-00-724-5813	96906	MS51964-66
185	1	3020-00-874-6722	19207	10908578
185	2	5365-00-492-6068	19207	10908535
185	3		19207	10908579
185	4	5310-00-878-7693	19207	10908582
185	5	3020-00-887-8918	19207	10908581
185	6		96906	MS51961-6
185	7		19207	10908583
185	8	5305-00-724-5813	96906	MS51964-66
186	1	3020-01-207-3769	97403	13214E2905
186	2	5365-00-492-6068	19207	10908535
186	3		19207	10908542
186	4	5310-00-878-7691	19207	10908650
186	5	5310-00-882-2319	19207	10908534
186	6	3020-00-874-6719	19207	10908541
186	7	3110-00-554-2733	43334	3L04XR1KJ
186	8	5315-00-881-3422	19207	10908536
186	9	5305-00-724-5813	96906	MS51964-66
187	1	3950-01-313-7822	19207	5705833
187	2		97403	13211E8638
187	3	5305-00-942-2196	96906	MS18154-60
187	4	5310-00-637-9541	96906	MS35338-46
188	1	5120-01-222-7938	19207	12355511-4
188	2	5120-01-222-7939	19207	12355511-5
188	3	5120-01-227-7044	19207	12355437
188	4	5340-01-222-7934	19207	12355501
188	5	4940-00-595-5720	08832	GS5
188	6	4933-01-046-7109	19200	12252157
188	7	5365-01-230-0200	19207	12355436
188	8	5120-01-227-8480	19207	12355451
188	9	5305-00-071-2074	96906	MS90728-118
188	10	2590-01-216-8646	19207	5705562
188	11	5306-00-050-0347	96906	MS51937-5
188	12	2590-01-228-5802	19207	12355345
188	13	2590-01-224-9241	19207	12355582
188	14	4730-00-873-0110	79470	C3109X6X2
188	15	5120-01-195-0640	55719	208FA
188	16	5120-01-301-5783	19207	5705565
188	17	5120-01-302-4387	19207	5705566
188	18	5306-00-017-8143	96906	MS51937-7
188	19	5120-00-240-8702	55719	GAX-1

CROSS-REFERENCE INDEXES

FIGURE AND ITEM NUMBER INDEX

FIG.	ITEM	STOCK NUMBER	CAGEC	PART NUMBER
188	20	4910-00-150-5805	15434	3375981
188	21	4010-01-185-0406	97403	13211E9331
188	22	5120-00-708-3639	19207	7083639
188	23	5120-00-605-3926	19207	8741739
188	24	5315-01-186-7991	19207	12332340
188	25	5365-01-186-8009	97403	13211E8658
188	26	5120-01-229-9134	19207	12355454
188	27	5315-01-229-9007	19207	12355438
188	28	5120-01-222-7932	19207	12355523
188	29	5120-01-227-7043	19207	12355510-1
188	30	5120-01-222-7933	19207	12355536
188	31	5120-01-222-7931	97403	13214E1988
188	32	5120-01-227-7042	19207	12355441
188	33	5180-00-157-1105	83324	K4-621-621L
188	34	5120-01-230-1509	79136	6900
188	35	5120-01-228-3162	19207	12355452
188	36	5120-00-157-2133	65814	0-474
188	37	5120-00-880-4264	19207	11602326
188	38	5120-01-224-3063	55719	AFS357
188	39	5315-01-229-9703	19207	12355519
188	40	5120-01-229-9135	19207	12355559
188	41	5120-01-222-7930	19207	12355515
188	42		K5547	J-38544
188	43	5133-01-247-4746	55719	CBC229
188	44		19207	12379458
189	1	4730-00-441-8700	96906	MS51500A8-4
189	2	4730-00-800-7570	96906	MS51503A4
189	3	4730-01-183-7167	01276	2242-8-8S
189	4	4730-00-729-4930	01276	2081-8-2S
189	5	4730-00-542-5911	96906	MS51532B10
189	6	4730-00-727-7485	96906	MS51532B12
189	7	4730-01-044-0878	96906	MS51532B4
189	8	4730-00-540-1525	96906	MS51532B6
189	9	4730-00-625-2212	96906	MS51532B8
189	10	4720-01-246-0992	19207	12355351
189	11	4720-01-252-8425	19207	12355352
189	12	4730-00-855-4799	96906	MS51519B10S
189	13	4730-01-079-1986	96906	MS51519A4
189	14	4730-01-329-4994	96906	MS51519A8
189	15	4730-00-203-3831	79470	C5105X6
189	16	5365-01-249-9707	96906	MS51518B10
189	17	4730-01-203-6941	96906	MS51518B12
189	18	4730-01-021-3850	96906	MS51518B4
189	19	5365-01-251-2034	96906	MS51518B6
189	20	4730-01-070-9214	96906	MS51518B8
189	21	4730-00-805-5094	96906	MS24399-19
189	22	4730-01-214-1741	81343	10-8 070123C
189	23	4730-00-706-8711	96906	MS51534A6-4
189	24	4730-00-676-3075	96906	MS51534A8-4
189	25	4730-00-074-0713	96906	MS51523A8
189	26	4730-01-270-7650	19207	12355353

CROSS-REFERENCE INDEXES

FIGURE AND ITEM NUMBER INDEX

FIG.	ITEM	STOCK NUMBER	CAGEC	PART NUMBER
189	27	4820-00-045-7415	96906	MS24593-8
189	28	4820-00-513-5471	97399	10F0-1-3T
189	29	2540-01-298-3975	19207	12367609
189	30	2590-01-326-8178	19207	12367607
189	31		19207	12367608
190	1	5120-00-516-4979	55719	FA4A
190	2	5120-00-935-7474	55719	FA4.5A
190	3	5120-00-965-0071	55719	FA5A
190	4	5120-00-683-8597	55719	FA6A
190	5	5120-00-596-8511	55719	FA7A
190	6	5120-00-596-8508	55719	FA8A
190	7	5120-00-683-8602	03914	FA10B
190	8	5120-00-596-1199	55719	FA12A
191	1	5120-00-203-4811	07971	1234
191	2	5120-00-203-4810	07971	1236
191	3	5120-00-203-4809	03914	28-038
191	4	5120-00-203-4808	07971	1240
191	5	5120-00-203-4807	30106	1242
191	6	5120-00-203-4806	07971	1244
191	7	5120-00-203-4804	07971	1248
191	8	5120-00-203-4799	30106	1260
191	9	5120-00-203-4792	07971	1272S
191	10	5140-01-305-3428	19207	12362149
191	11	5140-01-305-3429	19207	12362150
192	1	5120-00-184-8397	K5773	FC18
192	2	5120-00-184-8398	K5773	FC20
192	3	5120-00-236-2261	K5773	FC22
192	4	5120-00-184-8400	K5773	FC24
192	5	5120-00-184-8401	K5773	FC26
192	6	5120-00-541-4071	55719	FC28
192	7	5120-00-184-8403	K5773	FC30
192	8	5120-00-595-8213	55719	AN6506-10
192	9	5120-00-184-8405	55719	FC34
192	10	5120-00-517-7021	55719	FC36
192	11	5120-00-184-8407	55719	FC38
192	12	5120-00-293-2567	K5773	FC40
192	13	5120-00-184-8409	55719	FC42
192	14	5120-00-184-8410	55719	FC44
192	15	5120-00-184-8412	55719	FC48
192	16	5120-00-184-8414	55719	FC52
192	17	5120-00-184-8415	55719	FC54
192	18	5120-00-184-8416	55719	FC56
192	19	5120-00-184-8418	55719	FC60
192	20	5120-00-184-8420	55719	FC64
192	21	5120-00-184-8422	55719	FC68
192	22	5120-00-184-8424	55719	FC72
192	23	5120-00-184-8428	55719	FC80
192	24	5140-01-298-3983	19207	12367674
193	1		83324	3/4-16GH3
193	2	5133-01-195-1957	83324	SF62D
193	3		83324	SF62W4-A

CROSS-REFERENCE INDEXES

FIGURE AND ITEM NUMBER INDEX

FIG.	ITEM	STOCK NUMBER	CAGEC	PART NUMBER
193	4	5120-01-192-7620	83324	SF62W-A
193	5		83324	SF62S-A
193	6	5120-01-193-5061	83324	SF621R
193	7	5340-01-086-6760	81349	M45932/1-40
193	8	5340-01-113-5615	81349	M45932/1-39L
194	1	5133-00-837-7595	13130	2013 1/16
194	2	5133-01-053-7932	13130	2013 5/64
194	3	5133-01-045-4946	13130	2013 3/32
194	4	5133-00-988-5694	13130	2013 7/64
194	5	5133-00-988-5695	13130	2013 1/8
194	6	5133-00-988-5696	13130	2013 9/64
194	7	5133-00-988-5697	13130	2013 5/32
194	8	5133-00-988-5698	13130	2013 11/64
194	9	5133-00-988-5699	13130	2013 3/16
194	10	5133-01-051-4114	13130	2013 13/64
194	11	5133-00-988-5701	13130	2013 7/32
194	12	5133-00-988-5702	13130	2013 15/64
194	13	5133-00-988-5703	13130	2013 1/4
194	14	5133-01-119-7684	13130	2013 17/64
194	15	5133-00-988-5705	13130	2013 9/32
194	16	5133-01-056-2873	13130	2013 19/64
194	17	5133-00-988-5707	13130	2013 5/16
194	18	5133-01-263-2299	55719	DBC21/64
194	19	5133-01-127-6865	55719	DBC11/32
194	20	5133-01-065-9942	13130	04314
194	21	5133-00-988-5711	13130	2013 3/8
194	22	5133-01-018-9812	13130	2013 25/64
194	23	5133-01-021-9307	13130	2013 13/32
194	24	5133-01-018-9813	13130	2013 27/64
194	25	5133-01-018-9814	13130	2013 7/16
194	26	5133-01-121-5002	13130	2013 29/64
194	27	5133-01-023-1554	13130	2013 15/32
194	28	5133-01-088-1690	55719	DBC31/64
194	29	5133-01-021-9308	55719	DBC1/2
194	30	5140-00-277-8835	55719	B129A

By Order of the Secretary of the Army:

CARL E. VUONO
General, United States Army
Chief of Staff

Official:

PATRICIA P. HICKERSON
Col., United States Army
The Adjutant General

Distribution:
To be distributed in accordance with DA Form 12–37–E (Block 2291) Unit, Direct and General Support maintenance requirements for TM5–2350–262–24P.

☆ U.S. GOVERNMENT PRINTING OFFICE: 1991 543-016/40075

RECOMMENDED CHANGES TO EQUIPMENT TECHNICAL PUBLICATIONS

SOMETHING WRONG WITH THIS PUBLICATION?

FROM: (PRINT YOUR UNIT'S COMPLETE ADDRESS)

YOUR MAILING ADDRESS

DATE SENT

DATE YOU FILL OUT THIS FORM

PUBLICATION NUMBER	PUBLICATION DATE	PUBLICATION TITLE
TM 5-2350-262-24P	DATE OF TM	M9 Armored Combat Earthmover

BE EXACT . .PIN-POINT WHERE IT IS

PAGE NO.	PARA-GRAPH	FIGURE NO.	TABLE NO.	IN THIS SPACE TELL WHAT IS WRONG AND WHAT SHOULD BE DONE ABOUT IT:
31		31		ITEM 1 TOGGLE SWITCH IS HELD ONTO MOUNTING PLATE ITEM IS WITH TWO SCREWS THAT ARE NOT CALLED OUT IN MANUAL. PLEASE SUPPLY P/N FOR MISSING SCREWS.
100-1		100		ITEM 1 BELTS, V, MATCHED SET, P/N 202045 WHEN ORDERED COMES AS A GASKET SET. PLEASE SUPPLY CORRECT P/N FOR BELTS, V, MATCHED SET.

SAMPLE

PRINTED NAME, GRADE OR TITLE, AND TELEPHONE NUMBERS	SIGN HERE:
JOE DOE, CPL 555-1212	Cpl. Joe Doe

DA FORM 1 JUL 79 2028-2

PREVIOUS EDITIONS ARE OBSOLETE.

P.S.—IF YOUR OUTFIT WANTS TO KNOW ABOUT YOUR RECOMMENDATION MAKE A CARBON COPY OF THIS AND GIVE IT TO YOUR HEADQUARTERS.

REVERSE OF DA FORM 2028-2

SAMPLE

FILL IN YOUR UNIT'S ADDRESS

FOLD BACK

TEAR ALONG PERFORATED LINE

DEPARTMENT OF THE ARMY

COMMANDER
U.S. ARMY TANK-AUTOMOTIVE COMMAND
ATTN: AMSTA-MB
WARREN, MI 48397-5000

RECOMMENDED CHANGES TO EQUIPMENT TECHNICAL PUBLICATIONS

SOMETHING WRONG WITH THIS PUBLICATION?

FROM: (PRINT YOUR UNIT'S COMPLETE ADDRESS)

DATE SENT

PUBLICATION NUMBER	PUBLICATION DATE	PUBLICATION TITLE
TM 5-2350-262-24P	11 April 1991	M9 Armored Combat Earthmover

BE EXACT . .PIN-POINT WHERE IT IS

PAGE NO.	PARA-GRAPH	FIGURE NO.	TABLE NO.	IN THIS SPACE TELL WHAT IS WRONG AND WHAT SHOULD BE DONE ABOUT IT:

PRINTED NAME, GRADE OR TITLE, AND TELEPHONE NUMBERS	SIGN HERE:

DA FORM 1 JUL 79 2028-2

PREVIOUS EDITIONS ARE OBSOLETE.

P.S.—IF YOUR OUTFIT WANTS TO KNOW ABOUT YOUR RECOMMENDATION MAKE A CARBON COPY OF THIS AND GIVE IT TO YOUR HEADQUARTERS.

REVERSE OF DA FORM 2028-2

FILL IN YOUR UNIT'S ADDRESS

FOLD BACK

TEAR ALONG PERFORATED LINE

DEPARTMENT OF THE ARMY

COMMANDER
U.S. ARMY TANK-AUTOMOTIVE COMMAND
ATTN: AMSTA-MB
WARREN, MI 48397-5000

RECOMMENDED CHANGES TO EQUIPMENT TECHNICAL PUBLICATIONS

SOMETHING WRONG WITH THIS PUBLICATION?

FROM: (PRINT YOUR UNIT'S COMPLETE ADDRESS)

DATE SENT

PUBLICATION NUMBER	PUBLICATION DATE	PUBLICATION TITLE
TM 5-2350-262-24P	11 April 1991	M9 Armored Combat Earthmover

BE EXACT . .PIN-POINT WHERE IT IS				IN THIS SPACE TELL WHAT IS WRONG AND WHAT SHOULD BE DONE ABOUT IT:
PAGE NO.	PARA-GRAPH	FIGURE NO.	TABLE NO.	

PRINTED NAME, GRADE OR TITLE, AND TELEPHONE NUMBERS	SIGN HERE:

DA FORM 1 JUL 79 2028-2

PREVIOUS EDITIONS ARE OBSOLETE.

P.S.—IF YOUR OUTFIT WANTS TO KNOW ABOUT YOUR RECOMMENDATION MAKE A CARBON COPY OF THIS AND GIVE IT TO YOUR HEADQUARTERS.

REVERSE OF DA FORM 2028-2

FILL IN YOUR UNIT'S ADDRESS

FOLD BACK

DEPARTMENT OF THE ARMY

____

____

COMMANDER
U.S. ARMY TANK-AUTOMOTIVE COMMAND
ATTN: AMSTA-MB
WARREN, MI 48397-5000

TEAR ALONG PERFORATED LINE

RECOMMENDED CHANGES TO EQUIPMENT TECHNICAL PUBLICATIONS

SOMETHING WRONG WITH THIS PUBLICATION?

FROM: (PRINT YOUR UNIT'S COMPLETE ADDRESS)

DATE SENT

PUBLICATION NUMBER	PUBLICATION DATE	PUBLICATION TITLE
TM 5-2350-262-24P	11 April 1991	M9 Armored Combat Earthmover

BE EXACT . . PIN-POINT WHERE IT IS

PAGE NO.	PARA-GRAPH	FIGURE NO.	TABLE NO.	IN THIS SPACE TELL WHAT IS WRONG AND WHAT SHOULD BE DONE ABOUT IT:

PRINTED NAME, GRADE OR TITLE, AND TELEPHONE NUMBERS

SIGN HERE:

DA FORM 1 JUL 79 2028-2

PREVIOUS EDITIONS ARE OBSOLETE.

P.S.—IF YOUR OUTFIT WANTS TO KNOW ABOUT YOUR RECOMMENDATION MAKE A CARBON COPY OF THIS AND GIVE IT TO YOUR HEADQUARTERS.

REVERSE OF DA FORM 2028-2

FILL IN YOUR UNIT'S ADDRESS

FOLD BACK

DEPARTMENT OF THE ARMY

____

____

COMMANDER
U.S. ARMY TANK-AUTOMOTIVE COMMAND
ATTN: AMSTA-MB
WARREN, MI 48397-5000

TEAR ALONG PERFORATED LINE

THE METRIC SYSTEM AND EQUIVALENTS

LINEAR MEASURE

1 Centimeter = 10 Millimeters = 0.01 Meters = 0.3937 Inches
1 Meter = 100 Centimeters = 1,000 Millimeters = 39.37 Inches
1 Kilometer = 1,000 Meters = 0.621 Miles

WEIGHTS

1 Gram = 0.001 Kilograms = 1,000 Milligrams = 0.035 Ounces
1 Kilogram = 1,000 Grams = 2.2 Lb
1 Metric Ton = 1,000 Kilograms = 1 Megagram = 1.1 Short Tons

LIQUID MEASURE

1 Milliliter = 0.001 Liters = 0.0338 Fluid Ounces
1 Liter = 1,000 Milliliters = 33.82 Fluid Ounces

SQUARE MEASURE

1 Sq Centimeter = 100 Sq Millimeters = 0.155 Sq Inches
1 Sq Meter = 10,000 Sq Centimeters = 10.76 Sq Feet
1 Sq Kilometer = 1,000,000 Sq Meters = 0.386 Sq Miles

CUBIC MEASURE

1 Cu Centimeter = 1,000 Cu Millimeters = 0.06 Cu Inches
1 Cu Meter = 1,000,000 Cu Centimeters = 35.31 Cu Feet

TEMPERATURE

5/9 (°F -32) = °C
212° Fahrenheit is equivalent to 100° Celsius
90° Fahrenheit is equivalent to 32.2° Cesius
32° Fahrenheit is equivalent to 0° Celsius
9/5 C° +32 = F°

APPROXIMATE CONVERSION FACTORS

TO CHANGE	TO	MULTIPLY BY
Inches	Centimeters	2.540
Feet	Meters	0.305
Yards	Meters	0.914
Miles	Kilometers	1.609
Square Inches	Square Centimeters	6.451
Square Feet	Square Meters	0.093
Square Yards	Square Meters	0.836
Square Miles	Square Kilometers	2.590
Acres	Square Hectometers	0.405
Cubic Feet	Cubic Meters	0.028
Cubic Yards	Cubic Meters	0.765
Fluid Ounces	Milliliters	29.573
Pints	Liters	0.473
Quarts	Liters	0.946
Gallons	Liters	3.785
Ounces	Grams	28.349
Pounds	Kilograms	0.454
Short Tons	Metric Tons	0.907
Pound-Feet	Newton-Meters	1.356
Pounds Per Square Inch	Kilopascals	6.895
Miles Per Gallon	Kilometers Per Liter	0.425
Miles Per Hour	Kilometers Per Hour	1.609

TO CHANGE	TO	MULTIPLY BY
Centimeters	Inches	0.394
Meters	Feet	3.280
Meters	Yards	1.094
Kilometers	Miles	0.621
Square Centimeters	Square Inches	0.155
Square Meters	Square Feet	10.764
Square Meters	Square Yards	1.196
Square Kilometers	Square Miles	0.386
Square Hectometers	Acres	2.471
Cubic Meters	Cubic Feet	35.315
Cubic Meters	Cubic Yards	1.308
Milliliters	Fluid Ounces	0.034
Liters	Pints	2.113
Liters	Quarts	1.057
Liters	Gallons	0.264
Grams	Ounces	0.035
Kilograms	Pounds	2.205
Metric Tons	Short Tons	1.102
Newton-Meters	Pound-Feet	0.738
Kilopascals	Pounds Per Square Inch	0.145
Kilometers Per Liter	Miles Per Gallon	2.354
Kilometers Per Hour	Miles Per Hour	0.621

PIN: 052436–000